TECHNICAL MANUAL

PROCESS INSTRUCTIONS

METAL TREATMENTS
ELECTRODEPOSITION OF METALS AND METAL SURFACE TREATMENTS TO MEET AIR FORCE MAINTENANCE REQUIREMENTS

(ATOS)

F41608-82-D-A097

F41608-90-D-1819

Prepared By: TRI-COR Industries, Inc.

DISTRIBUTION STATEMENT: Approved for public release; distribution is unlimited. Requests for this document must be referred to DET 3, WR-ALC/AFTT, 2430 C St, Bldg 70, Area B, Wright-Patterson AFB, OH 45433-7632. PA Case Number AFMC 04-429. Submit recommended changes or problems with this Technical Order to WR-ALC/AFTT.

HANDLING AND DESTRUCTION NOTICE: Comply with distribution statement and destroy by any method that will prevent disclosure of the contents or reconstruction of the document.

Published under Authority of the Secretary of the Air Force

1 DECEMBER 2003 **CHANGE 2 - 30 APRIL 2005**

INSERT LATEST CHANGED PAGES. DESTROY SUPERSEDED PAGES.

LIST OF EFFECTIVE PAGES

NOTE: The portion of the text affected by the changes is indicated by a vertical line in the outer margins of the page. Changes to illustrations are indicated by miniature pointing hands. Changes to wiring diagrams are indicated by shaded areas.

Dates of issue for original and changed pages are:

Original ..... 0 ..... 1 December 2003
Change ..... 1 ..... 28 February 2005
Change ..... 2 ..... 30 April 2005

TOTAL NUMBER OF PAGES IN THIS MANUAL IS 466, CONSISTING OF THE FOLLOWING:

Page No.	*Change No.
Title	**2**
A	**2**
i - xi	0
xii Blank	0
1-1 - 1-7	0
1-8	**2**
1-9 - 1-15	0
1-16 Blank	0
2-1 - 2-11	0
2-12 Blank	0
3-1 - 3-5	0
3-6 Blank	0
4-1 - 4-4	0
5-1 - 5-11	0
5-12 Blank	0
6-1 - 6-17	0
6-18 Blank	0
7-1 - 7-11	0
7-12 Blank	0
8-1 - 8-9	0
8-10 Blank	0
9-1 - 9-6	0
10-1 - 10-7	0
10-8 Blank	0
11-1 - 11-4	0
12-1 - 12-14	0
13-1 - 13-13	0
13-14 Blank	0
14-1 - 14-5	0
14-6 Blank	0
15-1 - 15-8	0
16-1 - 16-13	0
16-14 Blank	0
17-1 - 17-9	0
17-10 Blank	0
18-1 - 18-5	0
18-6 Blank	0
19-1 - 19-6	0
20-1 - 20-8	0
21-1 - 21-10	0
22-1 - 22-23	0
22-24 Blank	0
23-1 - 23-4	0
24-1 - 24-17	0
24-18 Blank	0
25-1 - 25-3	0
25-4 Blank	0
26-1 - 26-2	0
27-1 - 27-5	0
27-6 Blank	0
28-1 - 28-5	0
28-6 Blank	0
29-1 - 29-136	0
A-1 - A-16	0
B-1 - B-2	0
B-3	1
B-4 - B-5	0
B-6 Blank	0
C-1 - C-4	0
D-1 - D-6	0
E-1 - E-7	0
E-8 Blank	0
Glossary 1 - Glossary 7	0
Glossary 8 Blank	0

*Zero in this column indicates an original page

TABLE OF CONTENTS

Chapter Page

LIST OF ILLUSTRATIONS viii

LIST OF TABLES viii

INTRODUCTION xi

1 General Information 1-1

1.1 Electrodeposition 1-1
1.2 Variables in Electroplating 1-1
1.2.1 Current Density 1-1
1.2.2 Agitation 1-1
1.2.3 Temperature 1-2
1.3 Solution Control 1-3
1.3.1 Sampling Solutions 1-3
1.4 Water 1-3
1.5 Rinsing 1-3
1.6 Hydrogen Embrittlement 1-4
1.7 Inspection 1-4
1.8 Equipment 1-5
1.8.1 Tank Construction 1-5
1.8.2 Anodes 1-5
1.8.3 Filtration 1-6
1.8.4 Racks 1-7
1.9 Electrodeposition Calculations 1-7
1.10 Metal Surface Treatments 1-8
1.11 Safety 1-8
1.11.1 Toxicity of Materials 1-9

2 PREPARATION OF BASIS METAL FOR COATING 2-1

2.1 Purpose 2-1
2.2 General 2-1
2.3 Stress-Relief 2-1
2.4 Cleaning 2-1
2.5 Preliminary Cleaning 2-2
2.5.1 Solvent Cleaning 2-2
2.5.2 Emulsion Cleaning 2-2
2.5.3 Alkaline Cleaning 2-2
2.5.4 Electrolytic Alkaline Cleaning 2-2
2.6 Mechanical Treatment 2-2
2.6.1 Abrasive Blast Cleaning 2-2
2.6.2 Abrasives 2-3
2.6.3 Cleaning Processes 2-3
2.7 Final Treatment 2-4
2.7.1 Electro Cleaning 2-4
2.7.2 Acid Cleaning 2-5
2.8 Masking 2-6
2.8.1 Types of Maskants 2-6

3 BRASS ELECTRODEPOSITION 3-1

3.1 Purpose 3-1
3.2 General 3-1
3.3 Plating Application 3-1
3.4 Underplating 3-1
3.5 Plating 3-1
3.6 Equipment 3-1
3.6.1 Tank Construction 3-1
3.6.2 Ventilation 3-1
3.6.3 Filtration 3-1
3.6.4 Agitation 3-1
3.6.5 Anodes 3-1
3.6.6 Power Source 3-1
3.7 Bath Characteristics 3-1
3.8 Troubleshooting 3-2

4 BRONZE ELECTRODEPOSITION 4-1

4.1 Purpose 4-1
4.2 General 4-1
4.3 Plating Application 4-1
4.4 Underplating 4-1
4.5 Plating 4-1
4.6 Equipment 4-1
4.6.1 Tank Construction 4-1
4.6.2 Ventilation 4-1
4.6.3 Filtration 4-1
4.6.4 Agitation 4-1
4.6.5 Anodes 4-1
4.6.6 Power Source 4-1
4.7 Bath Characteristics 4-2
4.8 Troubleshooting 4-2

5 CADMIUM ELECTRODEPOSITION 5-1

5.1 Purpose 5-1
5.2 General 5-1
5.3 Plating Application 5-1
5.4 Underplating 5-1
5.5 Plating 5-1
5.6 Equipment 5-1
5.6.1 Tank Construction 5-1
5.6.2 Ventilation 5-1
5.6.3 Filtration 5-1
5.6.4 Agitation 5-1
5.6.5 Anodes 5-2
5.6.6 Power Source 5-2
5.7 Bath Characteristics 5-2

6 CHROMIUM ELECTRODEPOSITION 6-1

6.1 Purpose 6-1
6.2 General 6-1

6.3 Plating Application 6-1
6.4 Underplating 6-1
6.5 Plating 6-1
6.6 Equipment 6-1
6.6.1 Tank Construction 6-1
6.6.2 Ventilation 6-1
6.6.3 Filtration 6-2
6.6.4 Agitation 6-2
6.6.5 Anodes 6-2
6.6.6 Power Source 6-2
6.7 Bath Characteristics 6-2

7 COPPER ELECTRODEPOSITION 7-1

7.1 Purpose 7-1
7.2 General 7-1
7.3 Plating Application 7-1
7.4 Underplating 7-1
7.5 Plating 7-1
7.6 Equipment 7-1
7.6.1 Tank Construction 7-1
7.6.2 Ventilation 7-1
7.6.3 Filtration 7-1
7.6.4 Agitation 7-1
7.6.5 Anodes 7-1
7.6.6 Power Source 7-1
7.7 Bath Characteristics 7-2

8 GOLD ELECTRODEPOSITION 8-1

8.1 Purpose 8-1
8.2 General 8-1
8.3 Plating Application 8-1
8.4 Underplating 8-1
8.5 Plating 8-1
8.6 Equipment 8-1
8.6.1 Tank Construction 8-1
8.6.2 Ventilation 8-1
8.6.3 Filtration 8-1
8.6.4 Agitation 8-1
8.6.5 Anodes 8-1
8.6.6 Power Source 8-1
8.7 Bath Characteristics 8-2

9 INDIUM ELECTRODEPOSITION 9-1

9.1 Purpose 9-1
9.2 General 9-1
9.3 Plating Application 9-1
9.4 Underplating 9-1
9.5 Plating 9-1
9.6 Equipment 9-1
9.6.1 Tank Construction 9-1
9.6.2 Ventilation 9-1
9.6.3 Filtration 9-1
9.6.4 Agitation 9-1
9.6.5 Anodes 9-1
9.6.6 Power Source 9-1
9.7 Bath Characteristics 9-2

10 LEAD ELECTRODEPOSITION 10-1

10.1 Purpose 10-1
10.2 General 10-1
10.3 Plating Application 10-1
10.4 Underplating 10-1
10.5 Plating 10-1
10.6 Equipment 10-1
10.6.1 Tank Construction 10-1
10.6.2 Ventilation 10-1
10.6.3 Filtration 10-1
10.6.4 Agitation 10-1
10.6.5 Anodes 10-1
10.6.6 Power Source 10-1
10.7 Bath Characteristics 10-2

11 LEAD-TIN-ANTIMONY ELECTRODE-POSITION 11-1

11.1 Purpose 11-1
11.2 General 11-1
11.3 Plating Application 11-1
11.4 Underplating 11-1
11.5 Plating 11-1
11.6 Equipment 11-1
11.6.1 Tank Construction 11-1
11.6.2 Ventilation 11-1
11.6.3 Filtration 11-1
11.6.4 Agitation 11-1
11.6.5 Anodes 11-1
11.6.6 Power Source 11-1
11.7 Bath Characteristics 11-1

12 NICKEL ELECTRODEPOSITION 12-1

12.1 Purpose 12-1
12.2 General 12-1
12.3 Plating Application 12-1
12.4 Underplating 12-1
12.5 Plating 12-1
12.6 Equipment 12-1
12.6.1 Tank Construction 12-1
12.6.2 Ventilation 12-1
12.6.3 Filtration 12-1
12.6.4 Agitation 12-1
12.6.5 Anodes 12-1
12.6.6 Power Source 12-2
12.7 Bath Characteristics 12-2

13 ELECTROLESS NICKEL PLATING 13-1

13.1 Purpose 13-1
13.2 General 13-1
13.3 Plating Application 13-1
13.4 Underplating 13-1
13.5 Plating 13-1
13.6 Equipment 13-1
13.6.1 Tank Construction 13-1
13.6.2 Ventilation 13-1
13.6.3 Filtration 13-1

13.6.4 Agitation 13-1
13.7 Bath Characteristics 13-2

14 NICKEL-CADMIUM ELECTRODEPOSITION 14-1

14.1 Purpose 14-1
14.2 General 14-1
14.3 Plating Application 14-1
14.4 Underplating 14-1
14.5 Plating 14-1
14.6 Equipment 14-1

15 RHODIUM ELECTRODEPOSITION 15-1

15.1 Purpose 15-1
15.2 General 15-1
15.3 Plating Application 15-1
15.4 Underplating 15-1
15.5 Plating 15-1
15.6 Equipment 15-1
15.6.1 Tank Construction 15-1
15.6.2 Ventilation 15-1
15.6.3 Filtration 15-1
15.6.4 Agitation 15-1
15.6.5 Anodes 15-1
15.6.6 Power Source 15-1
15.7 Bath Characteristics 15-1

16 SILVER ELECTRODEPOSITION 16-1

16.1 Purpose 16-1
16.2 General 16-1
16.3 Plating Application 16-1
16.4 Underplating 16-1
16.5 Plating 16-1
16.6 Equipment 16-1
16.6.1 Tank Construction 16-1
16.6.2 Ventilation 16-1
16.6.3 Filtration 16-1
16.6.4 Agitation 16-1
16.6.5 Anodes 16-1
16.6.6 Power Source 16-2
16.7 Bath Characteristics 16-2

17 TIN ELECTRODEPOSITION 17-1

17.1 Purpose 17-1
17.2 General 17-1
17.3 Plating Application 17-1
17.4 Underplating 17-1
17.5 Plating 17-1
17.6 Equipment 17-1
17.6.1 Tank Construction 17-1
17.6.2 Ventilation 17-1
17.6.3 Filtration 17-1
17.6.4 Agitation 17-1
17.6.5 Anodes 17-1
17.6.6 Power Source 17-1
17.7 Bath Characteristics 17-2

18 TITANIUM-CADMIUM ELECTRODEPOSITION 18-1

18.1 Purpose 18-1
18.2 General 18-1
18.3 Plating Application 18-1
18.4 Underplating 18-1
18.5 Plating 18-1
18.6 Equipment 18-1
18.6.1 Tank Construction 18-1
18.6.2 Ventilation 18-1
18.6.3 Filtration 18-1
18.6.4 Agitation 18-1
18.6.5 Anodes 18-1
18.6.6 Power Source 18-2
18.7 Bath Characteristics 18-2

19 ZINC ELECTRODEPOSITION 19-1

19.1 Purpose 19-1
19.2 General 19-1
19.3 Plating Application 19-1
19.4 Underplating 19-1
19.5 Plating 19-1
19.6 Equipment 19-1
19.6.1 Tank Construction 19-1
19.6.2 Ventilation 19-1
19.6.3 Filtration 19-1
19.6.4 Agitation 19-1
19.6.5 Anodes 19-1
19.6.6 Power Source 19-2
19.7 Bath Characteristics 19-2

20 ALUMINUM SURFACE TREATMENTS 20-1

20.1 Purpose 20-1
20.2 General 20-1
20.3 Anodize Application 20-2
20.4 Anodized Coating 20-2
20.5 Sealing 20-2
20.6 Equipment 20-3
20.6.1 Tank Construction 20-3
20.6.2 Ventilation 20-3
20.6.3 Agitation 20-3
20.6.4 Cathodes 20-3
20.6.5 Temperature Control 20-3
20.6.6 Racks and Fixtures 20-3
20.6.7 Power Sources 20-3
20.6.8 Recorder 20-3
20.7 Bath Operation 20-4
20.7.1 Chromic Acid Anodizing 20-4
20.7.2 Non-Chromic Acid 20-4
20.7.3 Sulfuric Acid 20-4
20.7.4 Hard Anodizing 20-4
20.8 Chemical Conversion Coating 20-4
20.8.1 General 20-4
20.9 Coating Application 20-5
20.10 Coating Appearance 20-5
20.11 Equipment 20-5
20.11.1 Tank Construction 20-5

20.11.2 Ventilation....20-5

21 BLACK COATINGS....21-1

21.1 Purpose....21-1
21.2 Black Oxide Coating – General....21-1
21.3 Coating Application....21-1
21.4 Undercoatings....21-1
21.5 Coating Criteria....21-1
21.6 Equipment....21-1
21.6.1 Tank Construction....21-1
21.6.2 Ventilation....21-1
21.6.3 Heating....21-1
21.6.4 Agitation....21-1
21.7 Bath Characteristics....21-1
21.8 Phosphate Coatings – General....21-2
21.9 Coating Application....21-2
21.10 Undercoating....21-2
21.11 Coating Criteria....21-2
21.12 Equipment....21-2
21.12.1 Tank Construction....21-2
21.12.2 Ventilation....21-2
21.12.3 Heating....21-2
21.13 Bath Characteristics....21-2

22 CHEMICAL MILLING....22-1

22.1 Purpose....22-1
22.2 General....22-1
22.3 Chemical Milling Application....22-1
22.4 Chemical Milled Surface....22-1
22.5 Equipment....22-1
22.5.1 Tank Construction....22-1
22.5.2 Ventilation....22-1
22.5.3 Agitation....22-2
22.6 Supplies....22-2
22.6.1 Work Bench....22-2
22.6.2 Maskant....22-2
22.6.3 Cutting Instrument....22-2
22.7 Bath Characteristics and Operation....22-2
22.8 Etch Factors – Aluminum Alloys....22-2
22.9 Control Areas....22-2
22.10 Rejuvenation....22-2

23 ELECTROPOLISHING....23-1

23.1 Purpose....23-1
23.2 General....23-1
23.3 Polishing Application....23-1
23.4 Equipment....23-1
23.4.1 Tank Construction....23-1
23.4.2 Ventilation....23-1
23.4.3 Filtration....23-1
23.4.4 Agitation....23-1
23.4.5 Anodes....23-1
23.5 Power Source....23-2
23.6 Bath Operation....23-2
23.7 Typical Solutions....23-2

24 MAGNESIUM SURFACE TREATMENTS....24-1

24.1 Purpose....24-1
24.2 General....24-1
24.3 Types of Treatment....24-1
24.3.1 Chrome Pickle Treatment (Type I)....24-1
24.3.2 Sealed Chrome Pickle Treatment (Type II)....24-1
24.3.3 Dichromate Treatment (Type III)....24-1
24.3.4 Galvanic Anodize Treatment (Type IV)....24-1
24.3.5 Caustic Anodize Treatment (Type V)....24-1
24.3.6 Chromic Acid Treatment (Brush on) Type VI....24-1
24.3.7 Fluoride Anodize Treatment (Type VII)....24-2
24.3.8 Chromate Treatment (Type VIII)....24-2
24.4 Dimensional Changes....24-2
24.5 Chemical Conversion Coatings....24-2
24.6 Anodic Coatings....24-2
24.7 Other Coating Systems....24-2
24.8 Equipment....24-2
24.8.1 Tank Construction....24-2
24.8.2 Ventilation....24-2
24.8.3 Agitation....24-2
24.8.4 Power Source....24-15
24.9 Troubleshooting for Type I and Type II Magnesium Treatments....24-15
24.10 Troubleshooting for Type III Treatment....24-16
24.11 Troubleshooting for Type VII Treatment....24-16
24.12 Troubleshooting for Type VIII Treatment....24-17

25 PASSIVATION OF STAINLESS STEEL....25-1

25.1 Purpose....25-1
25.2 General....25-1
25.3 Classification of Treatments....25-1
25.4 Treatment Application....25-1
25.5 Finish....25-1
25.6 Equipment....25-1
25.6.1 Tank Construction....25-1
25.6.2 Ventilation....25-1

26 SOLID FIlM LUBRICANTS....26-1

26.1 Purpose....26-1
26.2 General....26-1
26.3 Surface Preparations....26-1
26.4 Coating Application....26-2
26.5 Curing....26-2
26.6 Inspection....26-2
26.7 Quality Assurance....26-2

27 STYLUS (BRUSH) PLATING....27-1

27.1 Purpose....27-1
27.2 General....27-1
27.3 Plating Application....27-1
27.4 Underplating....27-1
27.5 Plating....27-1
27.6 Equipment....27-1
27.6.1 Power Unit....27-1
27.6.2 Ammeter....27-1
27.6.3 Voltmeter....27-1
27.6.4 Amperehour Meter....27-1
27.6.5 Plating Tool Handles....27-2
27.6.6 Dishes, Beakers, and Flasks....27-2
27.6.7 Accessory Equipment....27-2
27.7 Materials....27-2
27.7.1 Anodes....27-2
27.7.2 Anode Coverings....27-2
27.7.3 Sleeving....27-2
27.7.4 Solutions....27-2
27.8 Solution Characteristics....27-2
27.9 Calculating Amperehours....27-3
27.10 Prior Preparation....27-3

28 TROUBLESHOOTING....28-1

29 SOLUTION PREPARATION AND MAINTENANCE....29-1

29.1 Solution Control....29-1
29.2 General....29-1
29.3 Solution Control Schedule....29-1
29.4 Solution Preparation and Control Limits....29-10
29.5 Solution Test Methods....29-61
29.6 Acid Determination....29-65
29.7 Fluoboric Acid Determination....29-65
29.8 Nitric-Sulfuric Acid Strip....29-65
29.9 Chromic Acid Determination....29-66
29.10 Sulfuric Acid Determination....29-66
29.11 Acid Determination....29-66
29.12 Acid Salt Determination....29-66
29.13 Sodium Cyanide Determination....29-67
29.14 Sodium Hydroxide Determination....29-67
29.15 Free Sodium Cyanide Determination....29-67
29.16 Free Cyanide....29-67
29.17 Carbonates....29-67
29.18 Metallic Copper....29-68
29.18.1 Metric Copper Alternate Method....29-68
29.19 Metallic Zinc....29-68
29.20 Rochelle Salt or ROCHELTEX....29-68
29.21 Hydroxide Determination....29-69
29.22 Metallic Tin Determination....29-69
29.23 Metallic Cadmium....29-69
29.23.1 Metallic Cadmium (Alternate Method)....29-69
29.23.2 Metallic Cadmium (Alternate Method, No Fume Hood)....29-70
29.24 Total and Free Cyanide....29-70
29.25 Carbonate....29-70
29.25.1 Sodium Carbonate Determination (Alternate Method)....29-71
29.26 Caustic Content....29-71
29.27 Physical Tests....29-71
29.27.1 Quality Conformance Specimen Preparation....29-71
29.27.2 Specimen Criteria....29-71
29.27.3 Test....29-72
29.28 Chromic Acid....29-73
29.28.1 Chromic Acid (Alternate Method)....29-73
29.29 Sulfate....29-73
29.29.1 Sulfuric Acid (Alternate Method)....29-74
29.30 Trivalent Chromium....29-74
29.31 Iron....29-74
29.31.1 Iron (Optional)....29-74
29.31.2 Iron (Optional AAS Method)....29-75
29.32 Chloride Determination....29-75
29.33 Copper Determination....29-75
29.33.1 Copper Determination by Atomic Absorption (Optional Method)....29-75
29.34 Physical Tests....29-76
29.34.1 Quality Conformance Specimen Preparation....29-76
29.34.2 Specimen Criteria....29-76
29.34.3 Tests....29-76
29.35 Determination of Cadmium Using Ethylene Diamine Tetra-Cetic Acid (EDTA)....29-77
29.36 Determination of Total Cyanide....29-77
29.37 Determination of Caustic Soda....29-77
29.38 Determination of Carbonate....29-77
29.39 Determination of Titanium in Solution (Colormetric)....29-78
29.40 Determination of Titanium Content of Deposit....29-78
29.41 Preparation of Colormetric Titanium Standards (For Spectrophotometric or Visual Color Comparison)....29-78
29.42 Determination of Iron Content....29-79
29.43 Nickel Content Determination....29-79
29.43.1 Nickel Content (Optional AAS Method)....29-79
29.44 Chloride Determination....29-80
29.45 Chromic Acid Determination....29-80
29.46 Cyanide Determination....29-80
29.47 Alkaline Determination....29-80
29.48 Copper Metal Determination....29-80
29.48.1 Metallic Copper (Alternate Method)....29-81
29.48.2 Metallic Copper (Alternate Method)....29-81
29.48.3 Metallic Copper (Alternate Method)....29-81
29.49 Free Cyanide Determination....29-82
29.50 Hydroxide Determination....29-82
29.51 Carbonate Determination....29-82
29.52 Specific Gravity....29-82
29.53 pH Determination....29-83
29.54 Metallic Silver....29-83

29.54.1 Metallic Silver (Alternate Method).....29-83
29.55 Free Potassium Cyanide.....29-84
29.56 Potassium Carbonate Determination 29-84
29.57 Potassium Hydroxide Determination 29-84
29.58 Physical Tests 29-84
29.58.1 Quality Conformance Specimen Preparation 29-84
29.58.2 Specimen Criteria 29-84
29.58.3 Tests 29-85
29.59 Alkalinity Determination.....29-86
29.60 Sodium Stannate Determination.....29-86
29.61 Total and Free Caustic Soda.....29-86
29.62 Physical Test.....29-86
29.62.1 Quality Conformance Specimen Preparation 29-86
29.62.2 Specimen Criteria 29-86
29.62.3 Tests 29-87
29.63 Free Cyanide Determination 29-87
29.64 Metallic Lead Determination 29-87
29.64.1 Metallic Lead (Alternate Method) 29-88
29.64.2 Metallic Lead by AAS 29-88
29.65 Free Fluoboric Acid 29-88
29.66 Physical Tests 29-88
29.66.1 Quality Conformance Specimen Preparation 29-88
29.66.2 Specimen Criteria 29-88
29.66.3 Test.....29-88
29.67 Metallic Lead Determination 29-90
29.68 Metallic Antimony Determination 29-90
29.69 Metallic Tin Determination.....29-90
29.70 Free Fluoboric Acid 29-90
29.71 Zinc Metal Determination 29-91
29.71.1 To Determine Zn Factor.....29-91
29.72 Free Sodium Cyanide Determination 29-91
29.73 Sodium Hydroxide Determination 29-91
29.74 Sodium Carbonate Determination.....29-91
29.75 Physical Tests 29-92
29.75.1 Quality Conformance Specimen Preparation 29-92
29.75.2 Specimen Criteria 29-92
29.75.3 Tests 29-92
29.76 Gold Metal Determination 29-93
29.77 Free Potassium Cyanide Determination.....29-93
29.78 Potassium Carbonate Determination 29-94
29.79 Physical Tests 29-94
29.79.1 Quality Conformance Specimen Preparation 29-94
29.79.2 Specimen Criteria 29-94
29.79.3 Test.....29-94
29.80 Rhodium Metal Determination.....29-95
29.81 Sulfuric Acid Determination 29-95
29.82 Physical Tests 29-96
29.82.1 Quality Conformance Specimen Preparation 29-96
29.82.2 Specimen Criteria 29-96
29.82.3 Tests 29-96
29.83 Indium Metal Determination.....29-97
29.84 Sulfate Determination.....29-97
29.85 Nickel Metal Determination.....29-97
29.85.1 Nickel Metal (Alternate Method).....29-98
29.85.2 Nickel Metal by AAS (Optional Method).....29-98
29.86 Chloride Determination 29-98
29.87 Boric Acid Determination 29-98
29.87.1 Boric Acid Optional AAS Method.....29-98
29.88 Physical Tests 29-99
29.88.1 Quality Conformance Specimen Preparation 29-99
29.88.2 Specimens Criteria.....29-99
29.88.3 Test.....29-99
29.89 Sodium Hydroxide and Trisodium Phosphate 29-100
29.90 Total Alkalinity and Sodium Hydroxide 29-101
29.91 Trisodium Phosphate and Sodium Carbonate 29-101
29.92 Sodium Hydroxide, Trisodium Phosphate, and Sodium Cyanide.....29-101
29.93 Sodium Cyanide 29-102
29.94 Metallic Copper Determination.....29-102
29.94.1 Metallic Copper by AAS (Optional Method).....29-102
29.95 Sulfuric Acid Determination 29-102
29.96 Metallic Tin Determination.....29-102
29.97 Free Fluoboric Acid 29-103
29.98 Iridite 8P Determination.....29-103
29.99 Alkaline Cleaner (A-A-59260) Determination.....29-103
29.100 Aluminum Alloy Etchant Determination 29-103
29.101 Free Acid Determination.....29-104
29.102 Phosphate Determination.....29-105
29.103 Iron Determination 29-105
29.104 Nitrate Determination.....29-105
29.105 Free Acid Determination.....29-106
29.106 Nitrate Determination.....29-106
29.107 Titanium Determination 29-106
29.108 Surface Tension Determination.....29-106
29.109 Sodium, Potassium, or Ammonium Bifluoride Determination 29-108
29.110 Chromic Acid Anodize Determination.....29-108
29.111 Sulfuric Anodize Determination 29-108
29.112 Oxalic Acid Determination 29-108
29.113 Free Acid as Sulfuric Acid Determination 29-108
29.114 Estimation of Aluminum.....29-109
29.115 Sodium Dichromate Determination 29-109
29.116 Nitric Acid Determination.....29-109
29.117 Potassium Bifluoride 29-109
29.118 Chromic Acid Pickle Determination 29-110
29.119 Iridite #15 Determination.....29-110

29.120 Hydrochloric Acid Determination.....29-110
29.121 Free and Total Acid Determination 29-110
29.122 Iron Determination 29-111
29.123 Manganese Determination.....29-111
29.124 Zinc Determination.....29-111
29.125 Nitrate Determination.....29-112
29.126 Physical Test.....29-112
29.126.1 Specimen Criteria 29-112
29.126.2 Tests 29-112
29.127 Solution Concentration.....29-112
29.128 Physical Test.....29-113
29.129 SC-590 Determination.....29-113
29.130 Sulfuric Acid Determination 29-113
29.131 Sodium Hydroxide, Trisodium Phosphate, and Sodium Carbonate Determination.....29-113
29.132 Tin Determination.....29-115
29.133 Free Potassium Hydroxide Determination 29-115
29.134 Boric Acid Determination 29-115
29.135 Hydrochloric Acid Determination.....29-115
29.136 Phosphoric Acid Determination 29-116
29.137 Phosphoric Acid Determination (Optional AAS Method).....29-116
29.138 Sulfuric Acid and Ammonium Bifluoride Determination.....29-116
29.139 Potassium Hydroxide Determination 29-117
29.140 Isoprep 184 Determination.....29-117
29.141 Boric Acid/Sulfuric Acid Determination.....29-117
29.142 Aluminum Determination.....29-118
29.143 Chloride Determination (Preferred).....29-118
29.144 Chloride Determination (Alternate).....29-118
29.145 Chloride Determination (Second Alternate) 29-118
29.146 Physical Tests 29-118
29.146.1 Coating Weight.....29-118
29.146.2 Corrosion Resistance 29-118
29.147 Hexavalent Chromium Determination 29-119
29.148 Silicate Determination 29-119
29.149 Total Dissolved Solids Determination 29-119
29.150 Preparation and Standardization Procedures for Volumetric Solutions.....29-119
29.151 Preparation of Nonstandard Solutions 29-132
29.152 Preparation of Indicator Solutions 29-135

A CONVERSION EQUIVALENTS, FACTORS, AND TABLES A-1

A.1 Purpose.....A-1
A.2 General.....A-1

B REFERENCE B-1

B.1 Purpose.....B-1
B.2 General.....B-1

C MATERIALS C-1

C.1 Purpose.....C-1
C.2 Classification of Chemicals.....C-1
C.2.1 Primary Standard C-1
C.2.2 Reagent C-1
C.2.3 ACS.....C-1
C.2.4 CP.....C-1
C.2.5 Laboratory Grade.....C-1
C.2.6 Pure, Purified, or Practical C-1
C.2.7 Technical.....C-1

D MISCELLANEOUS INFORMATION.....D-1

D.1 Purpose.....D-1
D.2 General.....D-1

E USE OF MAGNE-GAGE THICKNESS TESTER E-1

E.1 Purpose..... E-1
E.2 Installation of Magne-Gage..... E-1
E.3 Preparation for Operation..... E-1
E.4 Calibration..... E-1
E.5 Operation of the Magne-Gage E-2
E.6 CalcuLation of Thickness Using a Calibration Curve..... E-4
E.7 Maintenance and Care of Magne-Gage..... E-4

LIST OF ILLUSTRATIONS

Number	Title	Page
5-1	Plating Speed at 100% Cathode Efficiency	5-3
22-1	Correct Method of Scribing	22-3
22-2	Incorrect Methods of Scribing	22-3
22-3	Excessive Blade Pressure Damage	22-3
22-4	Undercut Ratios, Using Turcoform Etchant 9H, for 2014 Bare and 6061 Bare Aluminum	22-4
22-5	Undercut Ratios, Using Turcoform Etchant 9H, for 7075 Bare and 7075 Clad Aluminum	22-5
22-6	Undercut Ratios, Using Turcoform Etchant 9H, for 2024 Bare and 2024 Clad Aluminum	22-6
22-7	Recommended Operating Ranges for Turcoform Etchant 9H	22-7
22-8	Optimum Solution Range	22-8
22-9	Chemical Milling Characteristics	22-10
29-1	Oxalic Acid Spot Test on Black Oxide Coatings	29-114
E-1	Side View of the Magne-Gage	E-6
E-2	Top View of Magne-Gage	E-7

LIST OF TABLES

Number	Title	Page
1-1	Materials for Tank Construction	1-12
1-2	Purity Specifications for Anodes	1-13
1-3	Recommended Micron Porosity in Plating Solution	1-13
1-4	Porosity Guide for Filter Tubes	1-14
1-5	Relative Conductivity	1-14
1-6	Electrodeposition Data	1-15
1-7	Measuring Surface Area	1-15
2-1	Acid Dips	2-5
2-2	Process I Masking Procedure	2-7
3-1	Plating Speed at 50% Cathode Efficiency	3-2
3-2	Brass Stripping Procedure	3-3
3-3	Brass Electroplating Procedure	3-4
4-1	Bronze Stripping Procedure	4-2
4-2	Bronze Electroplating Procedure	4-3
5-1	Plating Speed at 100% Cathode Efficiency	5-2
5-2	Cadmium Stripping Procedure	5-4
5-3	Cadmium Electrodeposition on Ferrous Materials Other Than Landing Gear Components	5-5
5-4	Cadmium Electrodeposition on High Strength Steels (above 180,000 psi) Other Than Landing Gear Components	5-7
5-5	Cadmium Electrodeposition on High Strength Steel (over 180,000 psi) Landing Gear Components. Plating on Landing Gear Components Will Meet Requirements of MIL-STD-870	5-9
5-6	Cadmium Electrodeposition on Copper and Copper Base Alloys	5-11
6-1	Plating Speed at 14% Cathode Efficiency	6-3
6-2	Chromium Stripping Procedure	6-4
6-3	Chromium Electrodeposition on Aluminum Alloys	6-5
6-4	Chromium Electrodeposition on Steel Parts Other Than Landing Gear Components	6-7
6-5	Chromium Electrodeposition on Stainless Steel and Nickel and Cobalt Base Alloys	6-10
6-6	Chromium Electrodeposition on High Strength Steel Landing Gear Components Chromium Plating on Landing Gear Components Shall Meet the Requirements of MIL-STD-1501	6-13
6-7	Plating Chromium over Chromium	6-15
6-8	Chromium Electrodeposition on Copper and Copper Base Alloys	6-16
7-1	Copper Stripping Procedure	7-2
7-2	Copper Electrodeposition on Aluminum Alloys	7-3
7-3	Copper Electrodeposition on Steel	7-5
7-4	Copper Electrodeposition on Corrosion Resistant Steel	7-7
7-5	Copper Electrodeposition on Copper and Copper Base Alloys	7-9
7-6	Plating Speed (Cyanide Bath) at 70% Cathode Efficiency	7-11
8-1	Gold Stripping Procedure	8-2
8-2	Gold Electrodeposition on Steel	8-3
8-3	Gold Electrodeposition on Surfaces Other Than Regular Steel	8-5

8-4 Gold Electrodeposition on Copper and Copper Base Alloys 8-7
8-5 Plating Speed at 95% Cathode Efficiency 8-8
9-1 Indium Stripping Procedure 9-2
9-2 Indium Electrodeposition on Steel 9-3
9-3 Lead-Indium Electrodeposition over Silver 9-5
10-1 Plating Speed at 98% Cathode Efficiency 10-2
10-2 Lead Stripping Procedure 10-3
10-3 Lead Electrodeposition on Steel 10-4
10-4 Lead Electrodeposition on Stainless Steel 10-6
11-1 Stripping Lead-Tin-Antimony 11-2
11-2 Lead-Tin-Antimony Electrodeposition on Bearing Surfaces 11-3
12-1 Nickel Stripping Procedure 12-2
12-2 Nickel Electrodeposition on Aluminum Alloys 12-4
12-3 Nickel Electrodeposition on Steel 12-6
12-4 Nickel Electrodeposition on Stainless Steel, Cobalt, and Nickel Base Alloys 12-8
12-5 Nickel Electrodeposition on High Strength Steel in Accordance with MIL-STD-868 12-10
12-6 Nickel Electrodeposition on Copper and Copper Base Alloys 12-12
12-7 Plating Speed at 95% Cathode Efficiency 12-13
13-1 Electroless Nickel Stripping Procedure 13-2
13-2 Electroless Nickel Deposition on Aluminum Alloys 13-3
13-3 Electroless Nickel Deposition on Steel 13-6
13-4 Electroless Nickel Deposition on Corrosion Resistant Steel, High Strength Steel (over 180,000 psi), Cobalt, and Nickel Base Alloys 13-8
13-5 Electroless Nickel Deposition on Titanium Alloys 13-10
13-6 Electroless Nickel Deposition on Copper and Copper Base Alloys 13-12
14-1 Nickel-Cadmium Stripping Procedure 14-1
14-2 Nickel-Cadmium Electrodeposition on Steel 14-3
15-1 Rhodium Stripping Procedure 15-2
15-2 Rhodium Electrodeposition on Steel Parts Other Than Stainless Steel or Those That Have Been Plated with Nickel, Silver, Platinum, Gold or Palladium 15-3
15-3 Rhodium Electrodeposition on Stainless and Parts Previously Plated with Nickel, Silver, Platinum, Palladium or Gold 15-5
15-4 Rhodium Electrodeposition on Copper and Copper Base Alloys 15-7
16-1 Plating Speed at 99% Cathode Efficiency 16-3
16-2 Silver Stripping Procedure 16-4
16-3 Silver Electrodeposition on Aluminum Alloys 16-5
16-4 Silver Electrodeposition on Steel 16-7
16-5 Silver Electrodeposition on Stainless Steel, Cobalt and Nickel Based Alloys 16-9
16-6 Silver Electrodeposition on Copper and Copper Base Alloys 16-12
17-1 Tin Stripping Procedure 17-3
17-2 Tin Electrodeposition on Aluminum Alloys 17-4
17-3 Tin Electrodeposition on Steel 17-6
17-4 Tin Electrodeposition on Copper and Copper Base Alloys 17-8
17-5 Plating Speed at 70% Cathode Efficiency 17-9
18-1 Titanium-Cadmium Stripping Procedure ... 18-3
18-2 Titanium-Cadmium Electrodeposition 18-4
19-1 Zinc Stripping Procedure 19-2
19-2 Zinc Electrodeposition on Steel 19-3
19-3 Plating Speed at 98% Cathode Efficiency 19-6
20-1 Anodize Stripping Procedure 20-5
20-2 Anodize Procedure 20-6
20-3 Conversion Coating Procedure 20-8
21-1 Stripping and Application of Black Oxide Coating for Ferrous Metal Parts 21-3
21-2 Application of Black Oxide Coating on Copper Alloys 21-5
21-3 Application of a Black Coating on Stainless Steel 21-7
21-4 Application of Phosphate Coating on Ferrous Parts 21-9
22-1 Trouble Shooting for Chemical Milling 22-9
22-2 Table of Etch Factors 22-11
22-3 Control Chart 22-12
22-4 Chem-Milling Aluminum Base Alloys 22-12
22-5 Chem-Milling Ferrous Base Alloys 22-17
22-6 Chem-Milling Titanium Alloys 22-20
23-1 Electropolishing Procedure 23-3
24-1 Correlation of Treatment Types 24-3
24-2 Dimensional Change Requirements of Coatings in Mils 24-3
24-3 Process for Application of Type I Treatment 24-3
24-4 Process for Application of Type II Treatment 24-5
24-5 Process for Application of Type III Treatment 24-7
24-6 Process for Application of Type IV Treatment 24-8
24-7 Process for Application of Type V Treatment 24-10
24-8 Process for Application of Type VI Treatment 24-12
24-9 Process for Application of Type VII Treatment 24-13
24-10 Process for Application of Type VIII Treatment 24-14

25-1 Passivation of Corrosion-Resistant Steels 25-2
27-1 Stylus Plating on Aluminum 27-3
27-2 Stylus Plating on Copper and Copper Base Alloys 27-4
27-3 Stylus Plating on 300 Series and 400 Series Stainless Steels, Nickel Base Alloys, Chromium Base Alloys, High Nickel Ferrous Alloys, Cobalt Base Alloys, Nickel Plate, and Chromate Plate 27-4
27-4 Stylus Plating on Iron and Carbon Steels (Not for Steel Heat Treated Above 180,000 psi) 27-4
27-5 Stylus Plating on Ultra High Strength Steels (Steels Heat Treated to 180,000 psi and Above) 27-5
28-1 Troubleshooting Chart 28-1
29-1 Solution Control 29-1
29-2 Processing Solutions 29-10
29-3 Test Methods 29-61
29-4 Thickness of Lead Coating 29-89
29-5 Salt Spray Exposure Times (Hours) 29-89
A-1 Conversion Equivalents A-1
A-2 Conversion Factors A-2
A-3 Conversion Tables Celsius to Fahrenheit or Fahrenheit to Celsius A-4
A-4 Amperes Per Square Decimeter to Amperes Per Square Foot or Amperes Per Square Foot to Amperes Per Square Decimeter A-6
A-5 Square Decimeters to Square Inches and Square Feet and Square Inches to Square Decimeters A-9
A-6 Grams Per Liter to Ounces (AV) Per Gallon and Ounces Per Gallon to Grams Per Liter A-12
B-1 Specifications Used by Military B-1
B-2 Specifications Used by Federal Government B-2
B-3 Standards Used by Military B-3
B-4 Standards Used by Federal Government B-3
B-5 Military Handbooks B-3
B-6 Air Force Publications B-3
B-7 Technical Orders B-3
B-8 Commercial Specifications B-4
C-1 Materials C-2
D-1 Identification and Spot Test for Various Plated Deposits D-1
D-2 Identification of Common Acids D-2
D-3 Alkali Cyanide Required to Dissolve Metal Slats D-3
D-4 Color Change and pH Range of Common Indicators D-3
D-5 Acid and Alkali Reactions with Metal D-4
D-6 Purification of Contaminated Plating Solution D-5
D-7 Selecting a Plated Coating D-6
E-1 Thickness of Coatings, Magnet Numbers, and Calibrations E-5

INTRODUCTION

1. PURPOSE.

This publication includes information and instructions for electrochemical and chemical replacement plating; and application of surface treatments to meet Air Force Repair, Maintenance, and Fabrication requirements.

2. SCOPE OF MANUAL.

a. Chapter 1 through Chapter 19 cover the introductory information: preparation of metals for coating and the application of metallic coatings. Chapter 20 through Chapter 27 contain information on the application of surface treatments and various coatings. Chapter 28 and Chapter 29 contain information on the preparation and maintenance of the solutions; solution test methods; and preparation of standard solutions and indicators.

b. APPENDIX A provides conversion equivalents and factors; APPENDIX B lists reference documents; APPENDIX C lists chemicals and materials; APPENDIX D contains miscellaneous information; and APPENDIX E describes the use of the magne-gage for thickness testing.

NOTE

The intent of this manual is to provide standard procedures and instructions to replace specifications, standards, and other instructions presently utilized by Air Force facilities.

CHAPTER 1
GENERAL INFORMATION

1.1 ELECTRODEPOSITION.

Electrodeposition is defined as the process of depositing a substance upon an electrode by electrolysis. The process of electrodeposition is one in which an electric current is transferred through an electrolyte and the products of electrolysis are deposited at the electrodes. The electrolyte is composed of a metal salt dissolved in a solvent, usually water. The metal salt dissociates to form charged ions, some positive, some negative. When a potential is applied between 2 electrons submerged in the solution, the positively charged ions are attracted to the negatively charged electrode (cathode) while the negatively charged ions migrate toward the positively charged electrode (anode). The charges on the ions are neutralized by the charges on the electrode and the products are deposited at the electrode. The product formed on the cathode is a deposit of the metal contained within the electrolyte and hydrogen while oxygen is liberated at the anode.

a. The fundamental principle of electrolysis is known as Faraday's Law, which is expressed in the following statements:

(1) The quantity of any element liberated at either the anode or cathode during electrolysis is proportional to the quantity of electricity that passes through the solution.

(2) The quantities of different elements or radicals liberated by the same quantity of electricity are proportional to their equivalent weights.

b. Electrodeposition is accomplished by applying enough voltage to overcome the resistance of the system and to electrochemically transfer the metal ions to the part. The resistance of the system includes resistance of the circuit connectors, anode, cathode, electrical conductor, solution, etc. Electrical current is provided by direct current rectifiers or motor generators.

c. The plating solution contains various chemicals to produce desired properties in the electrodeposited coating. Solution concentration, temperature, current density, agitation, etc. are factors which affect appearance, brittleness, ductilibility, hardness, and size of metallic crystals which make up the electrodeposited coating.

1.2 VARIABLES IN ELECTROPLATING.

The successful application of electroplated coatings depends largely upon the ability to control the character of the deposits. This can only be done by controlling all the variables involved during the application of the deposit. The variables include such things as amperage, solution concentration, solution pH, temperature, agitation, etc.

a. Electrodeposited metals consist of crystals, each of which is made up of a large number of lattice units. The properties of metal deposits are determined principally by the size and arrangement of their individual crystals. The size and arrangement of the crystals depend largely upon the rate at which the crystals form. This rate can be changed by altering the bath composition and by changing the conditions of deposition.

b. The 3 principle conditions are (1) current density, (2) method and degree of agitation, and (3) bath temperature.

1.2.1 Current Density. It is desirable to use as high a current density as practicable to increase the rate of production and decrease crystal size; however, too high a current density produces rough, treed, burnt deposits.

1.2.2 Agitation. There are numerous types of agitation available, but the type of agitation chosen should be dictated by the size and shape of the part, placement of parts on the rack, tank size and shape, and type of solution utilized. Several points to remember in choosing an agitation system are: (1) moving the cathode through the solution is more effective in disturbing the cathode film than moving the solution past the cathode, and (2) solution agitation requires a solution to be free from suspended solids if roughness is to be avoided.

a. During the plating process, the solution near the cathode becomes less dense as metal ions are plated out. This causes an upward movement of the electrolyte. This movement is termed natural convection. As natural convection is continued, the thickness of the diffusion film decreases, thus increasing the diffusion current and limiting the current density.

b. In most modern plating solutions, natural convection must be supplemented so that higher current densities can be utilized to produce finer grained, thicker deposits.

c. The main purposes of an agitation system are to (1) replenish the cathode film, (2) help dislodge gas bubbles from the surface of the work piece, and (3) prevent stratification of the solution. This agitation can be supplied in numerous ways such as (1) air

agitation, (2) cavitation agitation, (3) solution circulation, (4) convection agitation, or (5) mechanical agitation.

(1) Air Agitation – air agitation usually employs a low-pressure blower that forces air through perforated pipes lying on or near the bottom of the tank. As the air rises to the top of the solution, displacement of the solution occurs, thus a ROLL of the solution begins. The flow of air must be controlled by an in-line pressure regulator. Air compressors should not be utilized since contamination of the solution by oil and dirt will eventually result. Air agitation is ideal for water rinse operations but is not recommended for plating solution agitation.

(2) Cavitation (Ultrasonic) Agitation – this type of agitation is relatively new to the plating industry but there are reports that it increases the ratio of deposition, forms denser deposits, and reduces anode and cathode polarization. This type of agitation employes a high frequency generator which transfers electrical impulses into sound waves by the aid of a transducer immersed in the solution. The contracting and expanding face of the transducer causes pressure fluctuations in the solution. The liquid expands, permitting formation of minute vapor bubbles, and then it compresses, causing collapse of the bubbles. The repetition of this cavitation action many times per second produces agitation within the solution. Cavitation agitation has had limited use because of high initial cost of equipment and high maintenance cost.

(3) Solution Circulation – solution circulation usually employs a solution pump and piping from the tank to the pump and back. This agitation is accomplished by removing solution from the bath and introducing it back into the tank under pressure either as a stream or through a perforated pipe system, the latter being more effective. Generally, this type of agitation must be supplemented by cathode movement to produce desired results.

(4) Convection Agitation – convection agitation utilizes a plate or baffle in front of the heat exchanger. The solution is heated and rises by convection and flows over the baffle into the main body of the tank. The cooler solution in the main body of the tank flows under the baffle by convection, is heated, and circulates back into the main body of the solution. Thus, a constant gentle circulation of solution is induced from the main body of the tank to the heat compartment and from the top to the bottom of the tank. This type of agitation is very gentle and must be supplemented where vigorous agitation is necessary.

(5) Mechanical Agitation – mechanical agitation may be accomplished by cathode movement, propellers and paddles, or barrels.

(a) Cathode Movement – employs the use of cathode rods or cradles connected to a reciprocating mechanical device which slowly moves the cathode back and forth or up and down in the solution. Electrical contact is maintained by means of a flexible cable or braided connector. The work (cathode) moves to and fro or up and down in the solution at a rate sufficient to change the cathode film and shake off gas bubbles that form on the work surface. This is the most popular type of mechanical agitation in the plating industry.

(b) Propellers Paddles – employs an electric or air motor to drive a propeller or paddle within or through the solution. Drawbacks of this type agitation are (1) introduction of air into the solution by rotation of propellers, (2) initial cost of installation, (3) cost of maintenance, and (4) movement of solution may not allow replenishment of cathode film and removal of gas bubbles from the entire surface of the cathode.

(c) Barrels – this type of agitation employs a barrel into which parts are introduced. The barrel is lowered into the solution and rotated. The rotation of the barrel causes the solution movement. Electrical contact is by contact of the part with the wall or with other parts in contact with the wall of the barrel. There is no solution movement other than by filtration or convection when the barrel is removed from the solution.

1.2.3 Temperature. In general, an increase in temperature causes an increase in the crystal size. At higher temperatures, high current densities are possible. The influence of temperature is caused by a greater solubility and dissociation of the metal salt which leads to a higher conductivity. A high temperature increases the mobility of metal ions and decreases the viscosity of the solution so that the cathode film is more rapidly replaced. This reduces the tendency toward treeing and also increases the current density. Another advantage is that there is usually less hydrogen absorption in the deposit, less stress, and less tendency toward cracking.

1.3 SOLUTION CONTROL.

In engineering electroplating, it is not sufficient merely to coat an object with a metallic deposit with relative uniformity. It is necessary to produce a metal deposit that possesses properties such as brightness, ductilibility, hardness, or smoothness, which may be required for a particular purpose. The quality, uniformity, and serviceability of a deposit depend on the exact conditions under which it is produced. If these conditions vary within wide limits, the quality and uniformity will also vary widely. A plating bath should always be kept within prescribed chemical limits whether or not the bath appears to be functioning properly. The bath should be used in such a way that a minimum of chemical additions is required. The ideal condition is to have a bath whose anode efficiency is slightly higher than the cathode efficiency. This type of bath would be perfectly balanced but even in this case, drag-out would eventually remove a sufficient amount of essential chemicals so that chemical additions would be required. Since additions are required to all baths, it is best to make them frequently and in small amounts, so that chemical limits are easily held. Additions of large quantities of chemicals often lead to trouble. The actual frequency with which the various constituents of a bath require analysis depends on factors such as drag-out, rate of decomposition, relative anode, and cathode efficiencies, the operating periods of the bath, and the amount of work processed through the bath. Under average conditions, the metal content of a bath should be analyzed once per week. Other constituents may require more or less frequent analysis. More specific frequency requirements are stated in the solution control area of this manual.

1.3.1 Sampling Solutions.

a. The accuracy and significance of an analysis depends directly upon the care used in obtaining a sample of the solution. The gathered sample must be representative of the whole bath and must be taken under the operating conditions of the solution or else the test results will have no value. The solution shall be adjusted to the proper operating level, thoroughly mixed, and brought to the proper operating temperature before the sample is taken. A common mistake is to adjust the solution level then failing to agitate it to a homogeneous state. Another mistake is to add chemicals, then sample before the chemicals have been completely dissolved and thoroughly mixed.

b. The sample is taken by slowly inserting a glass sampling tube vertically into the solution. A finger is then placed over the upper end of the tube, the tube is lifted out of the solution, and the liquid is allowed to run into a clean sampling bottle. This should be repeated in various locations throughout the tank. If a solution is agitated sufficiently, the sampling can be done from the surface of the solution. If the sample contains excessive foreign material, it should be filtered before any determinations are made. The filter paper and funnel must be dry to prevent dilution of the solution and invalid results. Before starting any analytical procedures, the sample shall be brought to room temperature.

1.4 WATER.

a. In a plating shop, there are usually 4 uses for water: (1) make-up water, (2) replacing evaporation losses in baths, (3) rinse water, and (4) cooling water. The intended use of the water will dictate the purity of water required. In this manual, DISTILLED WATER is specified for use in (1) solution make-up, (2) maintaining solution levels in plating baths, and (3) solution analysis. Distilled water indicates water meeting the requirements of ASTM D1193 Type IV Reagent Water, when analyzed in accordance with FED-STD-791 Test Method 3289. Tap water may be utilized in rinsing operations, cleaning and etching operations, and cooling operations. Deionized water with a specific conductivity measurement of no greater than 50 micromhos may be used in lieu of distilled water.

b. The importance of good water in plating processes cannot be overstated. Tap water contains cations and anions which upon combination with plating solutions can lower plating efficiency. The most objectionable cations, calcium and magnesium, readily react with cadmium cyanide, cyanide copper, silver cyanide, and other compounds to form highly insoluble precipitates. The cations are normally present in water as salts combined as bicarbonates, sulfates, chlorides, and nitrates. The alkali metals (sodium and potassium) are probably not harmful in plating operations with the exception of a nickel plating solution where increased amounts may reduce throwing power and cause brittle deposits.

c. Traces of heavy metals such as iron and manganese can materially effect plating results. Other possible defects directly related to contaminants are roughness, porosity, streakiness or staining, iridescent or crystalline, modular, and pitting of deposits. Furthermore, it must be recognized that plating baths act as evaporators and hence concentrations of undesirable contaminants tend to build-up in the bath. It is, therefore, essential that reagent water be used to make up plating solutions and to replace evaporation losses.

1.5 RINSING.

a. Rinse tanks should be located so that work can be moved immediately from cleaning step to rinsing operation. The only reasonable delay between these operations is the time necessary to drain cleaning solution from the work.

b. Rinse tanks should have an overflow weir to help keep the surface of the water free from oil and other floating contaminants.

c. Rinse tanks must have a constant flow of clean water. Fresh water should flow in fast enough to displace at least 1% of the tank's volume per minute. This water should flow into the tank through a perforated pipe/pipes located on the side opposite the overflow weir so that the fresh water constantly forces floating impurities toward the overflow. Where water shortages occur, fresh water addition may be minimized through conductivity measurements, analytical procedures, or other controls as required to insure a satisfactory product.

d. If possible, use 2 rinse tanks rather than 1. The bulk of the rinsing is done in the first tank, then the second rinse is more certain to provide a cleaner rinse.

e. The effectiveness of rinsing is increased with agitation; therefore, some form of agitation should be provided.

f. Spray rinses should be attached to the immersion rinse tanks so that a final spray rinse may be given to difficult-to-rinse parts. In order to reduce water usage, parts may be rinsed by spraying with water above the tank from which parts were removed, prior to immersing in the rinse water tank. Proper procedures must be followed to prevent splashing chemicals on the operator.

g. Parts should remain in the rinse water long enough to perform satisfactory rinsing but not long enough for the work to oxidize.

1.6 HYDROGEN EMBRITTLEMENT.

a. Ferrous alloys, especially those containing considerable carbon, absorb atomic hydrogen during the cleaning, pickling, and plating operations. This absorption is greatest when using solutions with low cathode efficiencies or those containing cyanide. The amount of hydrogen absorbed depends on many factors, some of which are unknown. Present test methods are incapable of measuring the quantity of hydrogen absorbed during a given process. It is also impossible to predict what effect hydrogen will have on the basis metal except it becomes quite brittle. The effect is most pronounced in parts subjected to alternating stresses.

b. Until further information becomes available on hydrogen absorption, the following steps should be taken where embrittlement may present a problem:

(1) Restrict electrolytic cleaning to the anodic cycle.

(2) Limit pickling to a short non-gassing acid dip.

(3) Use plating solutions with relatively high cathode efficiencies or solutions designed to reduce embrittlement.

(4) Remove any hydrogen whose absorption cannot be prevented.

c. The only practical way to remove absorbed hydrogen is to heat the plated part at a temperature sufficiently high and for a long enough period to remove the hydrogen. This can present a problem on cadmium and zinc coated parts as these coatings are relatively impermeable to hydrogen and tend to seal it into the basis metal. The exact time depends on the metallurgical history of the basis metal, the size of the part, and the quantity of hydrogen that could have been absorbed.

d. Instructions on hydrogen embrittlement relief are contained in each chapter on plating. Plating of steel parts heat-treated above 240,000 pounds Per Square Inch (psi) tensile strength must be approved by the applicable engineering department.

1.7 INSPECTION.

a. The principle properties that determine the value of a metallic coating for a given purpose are its thickness, adhesion, and the protection it provides against corrosion and abrasion. Color and luster are minor but sometimes important properties. Many times the order is reversed inadvertently and the deposit is judged primarily on appearance allowing inferior plating to be judged acceptable. Because standards are difficult to express in writing or qualitative terms, the criteria of acceptability is often established by the inspector.

b. In arriving at a standard of acceptance, the following information must be ascertained: the function of the coating, the significant surfaces of the part, and the allowable deviation from an absolute perfect deposit. This information can be determined by studying the drawing of the parts; investigating the specifications that regulate the part; consulting the applicable engineering department; and reviewing standards of practice in the past. From this information and a general knowledge of plating facility production problems, an acceptable standard can be established for plated parts. In establishing the standard, it should be kept in mind, the requirements should be no more severe than experience justifies.

1.8 EQUIPMENT.

1.8.1 Tank Construction.

a. The primary requirement for a tank is that it holds a prescribed liquid without leakage or solution contamination for a desired period of time. The choice of tank materials is governed by the specific solution and the temperature to be used. The tank size, shape, and construction depend on its use, the material of construction, and the installation in which it will be used. The material must be chemically resistant to the solution or lined with material that is. Table 1-1 lists tank materials that may be used for different type solutions. Each chapter contains the recommended materials for specific solutions.

b. Tanks that require heating or cooling should be insulated as per the latest state of the art for conservation of energy. Tanks must also be insulated to prevent grounding, etc. from equipment attached to the tank, such as water pipes, agitation systems, etc.

1.8.2 Anodes.

a. The anode in an electroplating process plays an important role in the outcome of the quality of electrodeposits. Very often, little thought is given to purchasing the required purity, positioning in the electrolyte, and selecting the optimum length and shape. A careful reflection of the anode's role in the plating process can improve the deposit distribution, reduce solution contamination, lower chemical costs, improve production efficiency, and lessen plating problems.

b. In electrodeposition, current is passed through the solution between 2 electrodes. At the positive electrode (anode), metal is dissolved or oxygen is liberated and metal, and/or hydrogen is deposited on the negative electrode (cathode). When the positive electrode supplies metal ions to the solution, it is known as a soluble anode. When it is used only as a conductor of current, it is called an insoluble anode.

c. With soluble anodes, a metal ion is formed when a metal atom is oxidized by giving up electrons when entering the plating solution. When it recovers an equivalent number of electrons from the negative electrode, the metal ion is reduced back to a metal atom and is deposited on the cathode (part). A soluble anode is usually composed of the metal or alloy being plated. As the metal ions are used out of the solution, they are being replaced by the dissolution of the anode.

d. Insoluble anodes are composed of such materials as steel, nickel, alloyed lead, carbon, platinized titanium, titanium, or platinum. The sole function of the insoluble anode is to complete the electrical circuit; hence, it is merely necessary for it to be a good conductor and be unattacked by the solution with or without current flowing. Insoluble anodes are used to (1) maintain a uniform anode to cathode spacing when plating inside recessed or enclosed areas, (2) to prevent excessive metal build-up in baths employing chemically reactive soluble anodes, (3) to reduce the amount of money invested in inventory, and (4) to reduce the chances of loss through theft. Several drawbacks of using insoluble anodes are that they tend to oxidize certain bath constituents, therefore, cannot be used in solutions containing organic agents or cyanides. The metal content of solutions using insoluble anodes must be maintained by frequent additions of metal salts to keep the solution within balance. Whenever practical, it is desirable to employ soluble anodes because the cost of metal in an anode is normally 2 – 4 times less than the cost of an equivalent amount of metal dissolved in a solution as a metal salt.

e. When selecting anode material, prime consideration should be given to (1) anode efficiency, (2) type of electrolyte, (3) purity of anode material, (4) shape of anode, (5) anode current density and current carrying capacity, (6) anode spacing, and (7) method of fabrication.

f. Metallic impurities and coarse grains reduce anode efficiency. Also, solution conditions and impurities in the anode can cause the anode to passivate and drastically reduce anode efficiency. Anode purity can affect anode efficiency and also can be a never-ending source of contamination that can adversely affect the properties of the deposit. When employing plating solutions that can cause anode passivation because of excessive anode current density, anode area is an important consideration. A star shaped anode is an example where the surface area of 9 square inches/inch can be increased to 22 square inches/inch by this design. Anode current density must be maintained high enough to permit anode dissolution and yet low enough to prevent anode passivation. In most solutions, a 2:1 anode to cathode ratio with regard to current density is suggested.

g. Contaminated anodes can be a major source of impurities. The only remedy for this problem is to use anodes of high purity. Table 1-2 lists suggested purity specifications for anodes.

h. When considering anodes, it is of paramount importance that the type selected best suit the particular application. Anodes that have foreign

materials added to control anode dissolution should be compatible with the particular bath employed. Purity should be the highest attainable at a reasonable cost. Anode spacing should be designed to obtain uniform thickness. Anode area should be maintained so that anode current density can be controlled within desired limits. The anode and hook must be of sufficient cross-section to carry the required current without overheating.

1.8.3 Filtration.

a. Filtration is the separation of solids from liquids by passing the mixture through a media which permits passage of the liquid while it retains the solids. In plating solutions, this can be accomplished by either batch filtration or by individual tank filters. The batch filtration requires the solution be pumped into an auxiliary tank, the plating tank cleaned, then the plating solution pumped through a filter back into the original tank. This type of filtration is time consuming and requires production stoppage. When using individual tank filters, the solution is pumped from the plating tank, through the filter, and back into the same tank. This type of filtration requires no auxiliary tank, requires little attention except for periodic cleaning of the filter, and results in no loss of production.

b. There are many different types of filters available to accomplish filtration, but regardless of the filter design, the following criteria must be used to establish filtration requirements:

(1) Type and amount of contamination to be removed.

(2) Rate of solution turnover necessary to remove the contamination.

(3) Frequency of filtration required to maintain the solution at optimum conditions.

c. The main sources of solution contamination comes from anodes, air borne dust and dirt, drag-in, impure chemicals, and air agitation. These contaminants may be minimized by using bagged pure anodes; proper cleaning techniques, with thorough rinsing, before introduction of parts into the plating solution; using high purity chemicals; mechanical agitation; and good housekeeping procedures. Regardless of the precautions taken, the solution will eventually reach a contamination level that will produce inferior plating.

d. The flow rate is based upon the amount of contamination the plating solution is subjected to and the rate at which this contamination must be removed to maintain quality plating.

e. The contamination level is greatest upon introduction of a part into the solution; therefore, a high flow rate is necessary to divert particles from the parts to the filter. The greater the flow rate the less possibility of plating rejects. The general rule of thumb is that most plating solutions should have a flow rate that enables the solution to be turned over at least twice per hour.

f. The frequency of filtration is based upon the rate and type of contamination, difficulty in removing the impurities, general workload, and purity of solution desired. Since contamination is not introduced at a steady rate, it is desirable to have the solution as free from particles as possible when additional contamination is introduced. This can most effectively be done by using continuous filtration even during non-plating periods. The purpose of filtering a plating solution is to maintain clarity and uniform deposit quality.

g. The size of the filtration system is based upon the amount of contamination and the flow rate necessary to remove that contamination. The system should be designed for the heaviest possible workload that can be processed through the tank. To provide proper filtration, a 1000-gallon solution with a turnover of twice per hour requires a chamber of 20 filter tubes or 10 square feet of precoat filter surface area. Small filtration systems should be avoided as they tend to clog rapidly thus requiring frequent cleaning and cause excessive wear on pumps and filters.

h. Most of the filter systems require fabric for either construction of filter tubes or for a support on which the filter media is supported. The following is a list of fabrics and their possible application:

Cotton	Mild acid and alkaline solution
Dacron	Mild alkalis and acid solutions except concentrated sulfuric and nitric acids
Dynel	Strong acids and alkalis
Glass	Strong acid solutions except fluorides
Nylon	Alkalis and mild acid solutions
Orlon	Acid solutions except concentrated sulfuric and mild alkalis
Polypropylene	Strong acids and alkalis
Polyvinylchloride	Strong acids and alkalis
Teflon	All applications

i. The material for filter construction depends on size, solution corrosivity, and temperature. Steel

for alkaline and rubber or plastic lined steel for acid solution have been the standards for large filter chambers. However, new developments are steel lined with polyvinylchloride, epoxy, and phenolic coatings capable of withstanding temperatures commonly used in plating solutions. Small chambers are available in acrylic, chlorinated polyvinylchloride, plastics, polypropylene, and Pyrex. In some instances, the cost of stainless steel may be justified.

j. After selection of filter material, it is necessary to determine the filter porosity that will provide necessary solution clarity. The object of filter micron selection is to combine the highest flow rate with the coarsest possible filter media to achieve the most economical particle removal. Table 1-3 specifies the recommended micron porosity for use in the given plating solution.

k. Regardless of the filter type, filter material, or filter porosity, the best method of removing contamination is to prevent it from entering the solution initially.

1.8.4 Racks.

a. A plating rack or fixture is a device to hold parts in position in the solution and to conduct current to the part. Fixtures may range from a simple copper wire to a very complex form. They may hold 1 part or many parts and, in some cases, may carry auxiliary anodes.

b. The most important function of a rack or fixture is to carry the required current to the work piece. Table 1-5 shows the conductivity of specific metals as a percentage of copper. To correctly determine the size of material required, it is necessary to know the current density for a particular plating operation and the surface area to be plated. Copper is the most commonly used material for rack construction but, due to the weight consideration, other material must, at times, be substituted.

c. In addition to carrying sufficient current, racks must be designed with strength and rigidity without excessive weight. The manner of fastening the part to the rack for electrical contact is also an important feature. The contact must hold the work in its proper position while it transfers ample current to prevent overheating of the part. The size and number of contact marks must be held to a minimum and be located in areas of minimum exposure to service environmental conditions. Also to be considered in the position of the work piece is (1) does it provide good drainage to prevent solution transfer, (2) does it reduce gassing around holes or openings, (3) does it offer good current distribution, (4) does it prevent air and gas pockets?

d. Consideration must also be given to the weight of the loaded rack and how it is to be handled. It must be lifted clear of the tank top after each cleaning, rinsing, and plating operation. This definitely limits size, weight, and shape of the rack.

e. The number of parts that can be racked on a single fixture depends on the total weight, the size of the work piece, the current carrying capacity of the rack material, and the spacing of the parts. The rack must also be sized to fit the smallest tank in the production line.

f. There are no actual weight limitations on rack design; but if manual transfer is necessary, the total weight should not exceed 40 pounds. The length of the rack should be such that no part of the fixture or work piece is less than 6 inches from the bottom or 5 inches from the sides of the tank. The top of the work piece should be immersed at least 2 inches below the surface of the solution.

g. Keep in mind that some areas of the work piece may be difficult to plate and may require or be benefitted by the use of auxiliary anodes. Auxiliary anodes can assure more even plate distribution and can be utilized in some cases to increase production capacity. When auxiliary anodes are used, they must be fabricated so that they remain rigidly in position and cannot touch the part or cause arcing.

h. After fabrication, the rack must, in most cases, be insulated to prevent its being plated during the plating operation. This may be done by covering the rack with any stop-off material that will withstand the conditions and not cause contamination of any of the solutions through which it will pass.

1.9 ELECTRODEPOSITION CALCULATIONS.

a. Electroplating is the process of depositing a coating by means of an electrical current; hence, the amount of electricity applied to a part determines the thickness of the coating that will be deposited on its surface. It requires 1 Faraday (96,500 coulombs) of electricity to deposit 1 gram equivalent weight of a metal. The gram equivalent weight being the atomic weight of a metal divided by its valence. If a plating solution were 100% effective, it would be relatively easy to calculate the exact amount of electricity to apply to deposit a desired amount of coating; however, this is not the case. Various chemical and electrical reactions take place within the solution; therefore, only a portion of the applied current actually reaches the cathode to be used in the deposition of the coatings. Because of this, it is necessary to know the plating (cathode) efficiency and current distribution to determine the approximate plating thickness.

b. Table 1-6 provides information necessary for the calculation of approximate plating times and plating thicknesses.

c. The figures in Table 1-6 provide information necessary for the calculation of plating time and thickness of deposit.

To determine approximate plating time, use the following formula:

$$H = \frac{T \times 1000 \times F}{C}$$

Where

H = Time in Hours
T = Thickness in Inches
F = Factor
C = Current Density in Amperes Per Square Inch

Example: To determine plating time to deposit 0.005 inches of nickel:

$$H = \frac{0.005 \times 1000 \times 0.139}{0.25} = 2.78 \text{ hours}$$

To determine thickness of deposit on an item containing 12 square inches which has been plating in a chromium solution for 3 hours at a current density of 30 amps:

$$T = \frac{H \times (C/A)}{F \times 1000}$$

Where

T = Thickness in Inches
H = Plating Time in Hours
C = Current Density
A = Area Being Plated in Square Inches
F = Factors

$$T = \frac{3 \times (30/12)}{2.57 \times 1000} = 0.0029 \text{ inch}$$

To determine the total current density to apply to a part, use the following:

Current Density = A x C

Where

A = Area to be Plated in Square Inches
C = Current Density in Amps Per Square Inch

1.10 METAL SURFACE TREATMENTS.

Metal surface treatments are defined in this manual as chemical coatings formed on metallic surfaces by treatment with suitable chemical solutions. The surface treatments may be formed by immersion of the work in the chemical solution, by spraying or swabbing the work with solution, or a combination of immersion and electro-chemical treatment. Surface treatments convert the surface of the work to a compound of the metal such as a chromate, phosphate, or oxide. Most surface treatments are applied to provide corrosion protection, to serve as a paint base, or to provide a bonding surface.

1.11 SAFETY.

Guidance on industrial safety is provided in Air Force Occupational Safety and Health Standards (AFOSHSTD) 91-66, General Industrial Operations, and 91-501, Air Force Consolidated Occupational Safety Standards..

a. The purpose of this paragraph is not to thoroughly cover the subject but rather to acquaint individuals with some of the hazards associated with plating facilities. Safe working conditions include adequate ventilation, adequate lighting, fire precautions, health precautions, proper handling and storage of chemicals, personal protection from electrical and mechanical hazards, and intelligent conduct on the part of each person. Safe working conditions require that complete instructions be given each new employee and that a continuing program or reinstruction for the older employee be conducted under competent supervision. No employee should be permitted to handle hazardous materials until instructed in proper procedure and methods of material handling. First aid training shall be taught and practice sessions given to key personnel of the plating shop.

b. Supervisors are directly responsible for insuring that all possible safety measures are implemented. If a problem exists regarding safe working conditions, the supervisor shall seek the advice of the Ground Safety Officer or Bio-Environmental Engineer, whichever is applicable. Activities not staffed with qualified fire prevention, ground safety, or medical service personnel shall request assistance from the following organizations in the order listed:

1. Base: Director of Base Medical Services, Ground Safety Officer, or Fire Department

2. Command: Surgeon, Ground Safety, or Fire Chief

3. ALC: Surgeon, Ground Safety, or Fire Chief

4. The Armstrong Laboratory

1.11.1 Toxicity of Materials. Toxicity is the potential of a substance to cause injury by direct chemical action with the body tissues. Certain chemicals will pass through some cells without interfering with their function, and then interfere with the function of other cells. This interference may be temporary or serious enough to cause permanent damage to the cell. Toxic effects are generally described as local or systemic and in relation to the organs or tissues affected. Local injuries are those limited to the area of the body that has come in contact with the toxicant, the most common being the skin and the eyes. Local injuries may also be encountered in the nose, throat, and lungs after inhalation of toxicants and in the mouth, throat, stomach, and intestines after swallowing. Systemic injuries are those produced in any of the organs after the toxicant has been absorbed into the blood stream. The chemical may have entered the body via the lungs, stomach, or the skin. Therefore, the same chemical can cause both local and systemic effects. There are 3 types of exposure to chemicals that may occur in the plating facility: contact with the skin and eyes, inhalation, and swallowing.

a. Contact with the skin and eyes is the most important because of the frequency with which it occurs. The most common results of excessive contact on the skin is a localized irritation, but an appreciable number of materials are absorbed through the skin with sufficient rapidity to produce systemic poisoning. The main portals of entry of chemicals through the skin are the hair follicles, sebaceous glands, sweat glands, and cuts or abrasions of the outer layers of the skin. Contact of chemicals with the eyes is of particular concern because these organs are so sensitive and because impairment or loss of vision is tragic.

b. Inhalation of air contaminated with chemicals is of urgent concern in all large scale operations, since only a few grams of many substances can produce excessive contamination. Whenever materials are handled and being used, small amounts escape into the air unless the operation is conducted in a sealed system, a highly impractical practice. This is true whether the material exists in a solid, liquid, or gaseous state. If the amount getting into the air exceeds Threshold Limit Value (TLV), injury may result in the workers who may be constantly exposed. The TLV is the atmospheric concentration of the material in question to which workers may be exposed safely 8 hours per day. These values may be exceeded occasionally for short duration so long as the weighed average concentration daily does not exceed the TLV. Annual reviews are made of the threshold limits and are published in several journals including the Archives of Environmental Health and the Industrial Hygiene Digest.

c. Swallowing of chemicals may occur from exposure to air contamination with duct and fumes or by contamination of food and drink. The amount of such swallowing from the air is normally insignificant compared to the amount inhaled.

1.11.2 The senses of smell and pain can be helpful in preventing excessive exposure to chemicals. When excessive amounts of chemicals are smelled or pain or discomfort experienced, the worker should clear the area and steps should be taken to return the area to a safe working environment.

1.11.3 Ultimately, the safe use of chemicals depends on the control of the hazard through proper handling techniques, good engineering design, the use of protective equipment based on accurate knowledge of the characteristics of the material, and the proper discipline of the personnel.

1.11.4 The first rule for the prevention of intoxication should be, TREAT EVERY SUBSTANCE AS HIGHLY TOXIC UNLESS YOU KNOW DEFINITELY THAT IT IS NOT.

1.11.5 There are many materials within the plating facility that are hazardous and should be handled with great respect; however, the following substances are of the most concern: acids such as acetic, chromic, citric, fluoboric, hydrochloric, hydrofluoric, nitric, phosphoric, sulfamic, sulfuric, and tartaric; and alkalies such as ammonium hydroxide, potassium hydroxide, sodium carbonate, sodium cyanide, sodium hydroxide, sodium pyrophosphate, sodium silicate, and trisodium phosphate. Furthermore, the end products resulting from the mixture of different chemicals and the accidental combination of various gases can be of major concern.

a. Chromic acid attacks the skin and mucous membranes, forming painful and slow healing ulcers. The mucosa of the respiratory passages, the cartilage of the nasal septum, and the conjunctiva of the eye are all harmfully affected by chromic acid vapor or spray. Chromic acid is also a recognized carcinogen. Chromic acid is a very powerful oxidizing agent and may cause violent reactions when in contact with organic matter or reducing agents.

b. Hydrochloric acid (muriatic acid) is an irritant to the membranes of the eyes and respiratory tract and a concentration of 35 ppm causes irritation of the throat after short exposure. More severe exposure can result in pulmonary edema and often laryngeal spasms. In general, hydrochloric acid causes little trouble other than from accidental splashes and burns and its corrosiveness to equipment.

c. Hydrofluoric acid is extremely irritating and corrosive to the skin and mucous membranes. Inhalation of the vapor can cause ulcers of the upper respiratory tract, even low concentrations for brief exposures are dangerous. Hydrofluoric acid causes severe skin burns which are slow in healing. The

subcutaneous tissue may be affected, becoming blanched and bloodless. Gangrene of the affected area may follow. In case of skin contact, the area should be flushed with plenty of water. Following this, an iced aqueous or alcohol solution or an ice cold saturated solution of magnesium sulfate (Epsom salts) should be applied for at least 30 minutes or longer if pain persists. If a physician is not on hand at this time, it is permissible to apply a generous quantity of freshly prepared paste from powdered magnesium oxide and glycerine.

d. Nitric acid vapor is highly irritant to the mucous membranes of the eyes and respiratory tract and to the skin. It is also corrosive to the teeth. Because of its irritant properties, exposures to dangerous concentrations seldom occur. When in concentrated form, nitric acid is a powerful oxidizing agent and can explode on contact with powerful reducing agents. When heated to decomposition, it emits highly toxic fumes.

WARNING

When concentrated sulfuric acid comes in contact with water, a large amount of heat is generated. Splattering or a violent explosion may occur if water is added to the acid. Therefore, when the two are mixed, the acid should be slowly and cautiously added to the water while the solution is being constantly stirred.

e. Sulfuric acid is a highly corrosive material which causes severe burns to the skin and repeated contact with dilute solutions can cause dermatitis. Inhalation of the mist may cause an inflammation of the upper respiratory tract leading to chronic bronchitis. Inhalation of concentrated vapors or mists of hot acid can cause rapid loss of consciousness with serious damage to lung tissue. In concentrated form, it acts as a powerful caustic to the skin destroying the epidermis and penetrating some distance into the skin. This causes great pain and, if much of the skin is involved, it is accompanied by shock, collapse, and symptoms similar to those seen in severe burns. The fumes or mist cause coughing and irritation of the mucous membranes of the eyes and upper respiratory tract. Sulfuric acid is a powerful oxidizer and can ignite upon contact with combustibles. When heated, it gives off highly toxic fumes.

WARNING

Alkalies produce heat when combined with water, therefore, should never be added to hot water or hot solutions as violent eruptions may occur. The liquid should be cooled and the alkali added, or the material should be dissolved in cold water then added to the solution.

f. Alkalies are not too important from the inhalation standpoint, except for the immediate choking and coughing when exposed to the mists or dusts of these chemicals. Like acids, the alkalies act on the skin as primary irritants. Alkaline solutions soften and dissolve the keratin layer and the skin becomes white, soggy, wrinkled, and macerated. Repeated exposure frequently results in the development of chronic eczematous skin conditions. The strong caustics may produce chemical burns which are often deep and slow in healing.

WARNING

Cyanide compounds and solutions liberate large quantities of deadly poisonous and flammable hydrocyanic acid gas in the presence of acidic conditions. For this reason, all cyanide materials should be isolated away from acid materials or oxidizers. All reserve cyanide salts should be stored in tightly sealed containers in controlled rooms, separated from all other chemical compounds. Tanks containing cyanide solutions must be diked to prevent possible mixing with other chemicals in the event of a spill.

g. Cyanides are deadly and extremely rapid poisons which cause throat irritation, dizziness, nausea, general weakness and headache, palpitation, feeling of suffocation, paleness, deep breathing, sudden unconsciousness, and possible stoppage of breathing. Cyanides are extremely dangerous either ingested, inhaled, or absorbed through the skin, therefore, must be handled with extreme caution using protective equipment such as masks, gloves, aprons, etc.

Emergency First Aid Procedures: If over come by cyanides, the patient should be moved to fresh air and laid down. Contaminated clothing must be removed immediately and the skin or eyes flushed with plenty of water for at least 15 minutes. Medical aid must be called immediately. The patient must be kept quiet and warm. If material has been swallowed, induce vomiting with soapy or mustard

water - repeat until vomit fluid is clear. Apply artificial respiration if breathing has ceased.

1.11.6 There are several precautions which may be taken to prevent or minimize injury to workers employed in or about plating rooms and areas where chemicals are stored:

a. Workers should wear personal protective clothing, including goggles, face shields, or helmets; rubber or plastic aprons; gloves, boots, or uniforms; and respirators.

b. Workers whose clothing frequently comes in contact with corrosive chemicals should change clothes completely at the beginning and completion of each shift, and take a thorough shower at the end of the shift.

c. Rapid-operating, deluge showers and eye washes shall be provided in potentially hazardous areas so that accidental splashes may be treated quickly.

d. All open tanks containing hot or corrosive solutions shall not be less than 36 inches above the floor or platform level, or adequate guard rails should be installed around such tanks.

e. Employ a paint color code on hazardous tanks, pipes, etc.

f. Use only recommended transferring and transporting equipment and methods for dangerous chemicals.

g. When making up acid solutions, never add water to concentrated acid, always add the acid to the water slowly with continuous stirring of the solution.

h. Never add dry alkaline compounds to hot solutions. Either cool the solution or dissolve the compound in cold water, then add it to the solution.

i. Avoid breathing fumes from acids and dust from alkaline cleaners, since respiratory problems can occur.

j. If spillage of any chemical does occur, never let it remain on the floor. Always clean up a spill as quickly as possible to avoid any future reaction with any other chemical with which it may come in contact.

1.11.7 There are many other hazards such as electrical and mechanical hazards associated with the plating facility; far too many on which to elaborate. However, some precautions can be taken to minimize those hazards.

a. All equipment shall be of the proper size for the job.

b. The equipment shall be properly installed by competent personnel.

c. The equipment shall be adequately maintained and repaired when necessary.

d. All utilities such as steam, hot water, cold systems shall be properly insulated.

e. A color code shall be employed to draw attention to hazardous items.

f. Floors shall be kept dry and should be of the nonskid type.

g. Aisles and passageways shall be kept clear and uncluttered to provide mobility and eliminate tripping hazards.

h. Unused equipment and supplies shall be stored out of the area.

i. Moving parts of equipment, such as belts or gear drives, shall be protected.

j. All equipment shall be of the proper type to meet local, state, and national requirements.

k. Good lighting and proper ventilation shall be provided, especially in operations involving hazardous or toxic chemicals.

l. Highly hazardous operations shall be performed in isolated areas to minimize personnel exposure to incipient dangers.

m. Chemical goggles or a faceshield and hearing protection shall be worn when performing abrasive blasting or using compressed air.

n. Heat resistant gloves shall be worn when handling hot parts.

1.11.8 The hazards of the plating facility are no greater than that of most other departments when proper precautions are taken. It is necessary, however, to stress proper precautions since plating shop hazards are different from those normally encountered. All employees should be reminded repeatedly of these dangers. Appropriate warning signs or posters should be located in carefully chosen and conspicuous locations to serve as repeated reminders of the potential dangers associated with certain operations or areas.

Table 1-1. Materials for Tank Construction

Solutions	Steel	Stainless Steel	Plastic	Plastic Lined Steel	Lead Lined	Rubber Liner	Ceramic	Acid Brick Lined	Glass
Alkaline Cleaning	R	NR	NR	S	NR	NR	NR	NR	NR
Brass	R	S	R	R	NR	S	S	NR	S
Bronze	R	S	R	R	NR	S	S	NR	S
Cadmium (alkaline)	R	NR	R	R	NR	NR	NR	NR	NR
Chromium	NR	NR	R	R	R	NR	NR	S	NR
Copper (acid)	NR	NR	R	R	S	R	S	S	S
Copper (alkaline)	R	NR	S	S	NR	NR	NR	NR	NR
Gold (alkaline)	NR	S	R	R	NR	NR	S	NR	S
Indium	NR	R	S	R	NR	S	S	NR	S
Lead	NR	NR	S	S	NR	R	NR	S	NR
Nickel	NR	NR	R	R	NR	R	NR	NR	S
Rhodium	NR	NR	R	R	NR	R	S	NR	S
Silver	NR	NR	R	R	NR	R	S	NR	S
Tin (alkaline)	R	NR	S	NR	NR	NR	NR	NR	NR
Zinc (alkaline)	R	NR	S	R	NR	S	NR	NR	NR
Hydrochloric Acid	NR	NR	S	R	NR	NR	S	S	S
Hydrofluoric Acid	NR	NR	S	R	NR	NR	NR	S	NR
Nitric Acid	NR	R	S	R	NR	NR	S	S	S
Sulfuric Acid	NR	S	S	R	R	NR	S	S	S

R – Recommended
S – Suitable
NR – Not Recommended

Table 1-2. Purity Specifications for Anodes

Material	Obtainable Purity %	Objectional Impurities
Cadmium	99.95	Ag, As, Cu, Fe, Pb, Sb, Ti, Zn
Copper	99.97	Ag, Cd, Fe, Pb, S, Sn, Zn
Lead Alloy	99.92	Al, Cu, Cd, Zn
Nickel	99.98	Ag, Cd, Cu, Fe, Pb, Sn, Zn
Tin	99.92	Ag, As, Bi, Cd, Cu, Fe, Pb, S, Sb, Ni, Zn
Tin-Lead	99.93	Ag, As, Bi, Cu, Fe, S, Sb, Ni, Zn
Silver	99.95	Bi, Fe, Mn, Se, S, Sn, Te, Zn
Zinc	99.9	Cu, Cd, Pb, Sn

Table 1-3. Recommended Micron Porosity in Plating Solution

Solution	Porosity
Brass	15
Bronze	15
Cadmium	30
Chromium	15
Copper (acid)	15
Copper (cyanide)	15
Gold (cyanide)	5
Indium	15
Lead (fluoborate)	15
Nickel (sulfamate)	15
Nickel (watts)	15
Rhodium	5
Silver (cyanide)	5
Tin (alkaline)	30
Titanium Cadmium	30
Zinc (cyanide)	30

Suggested tube use by micron rating:

5 – 10 Micron — for use where light dirt loads exist.
15 Micron — for use in acid solutions.
30 Micron — for use in alkaline solutions.
50 – 100 Micron — for use during initial clean-up of dirty solution.

Table 1-4. Porosity Guide for Filter Tubes

Porosity	Micron Size
Extra Coarse	100
Very Coarse	75
Coarse	50
Medium	30
Fine	15
Extra Fine	10 – 5
The life expectancy of a filter depends upon the solution in which it is used and the amount of contamination that must be removed. The filter should be cleaned and repacked whenever the flow rate is reduced to ½ its initial flow rate.	

Table 1-5. Relative Conductivity

Material	1 x 1 inch	¾ x 1 inch	½ x 1 inch	¼ x 1 inch	1 inch Dia	¾ inch Dia	½ inch Dia	¼ inch Dia
Copper	1000	750	500	250	785	445	200	50
Aluminum	600	450	300	150	470	265	120	30
Nickel	252	189	126	63	198	112	50	13
Brass	250	185	125	63	196	111	50	6
Steel	120	90	60	30	94	53	24	6
Lead	83	62	42	21	65	37	17	4
Titanium	31	23	16	8	24	14	6	1½
Stainless Steel	23	17	12	6	18	10	5	1
Size								

Table 1-6. Electrodeposition Data

	Usual Cathode Efficiency (%)	Amp Hrs per Sq Ft to Deposit 0.001 Inch at 100% Efficiency	(F) Factor [1]	(C) Usual Current Density in Amps/Square Inch
Brass	50	1.95	0.027	0.035
Cadmium	96	9.73	0.07	0.18
Chromium	14	51.8	2.57	2.5
Copper (acid)	98	17.8	0.126	0.21
Copper (cyanide)	70	8.89	0.088	0.21
Gold (cyanide)	95	6.2	0.045	0.04
Indium	65	12.0	0.128	0.14
Lead	98	6.9	0.049	0.10
Nickel	95	19.0	0.139	0.25
Rhodium	80	22.9	0.199	0.10
Silver	99	6.2	0.043	0.18
Tin (alkaline)	70	7.8	0.077	0.14
Zinc (cyanide)	98	14.3	0.101	21

[1] Factor is equal to amp hours per square inch to apply a 0.001 inch deposit at the usual cathode efficiency.

Table 1-7. Measuring Surface Area

Square	Area = Side x Side
Rectangle	Area = Length x Width
Triangle	Area = 1/2 x Base x Height
Cone	Area = 1/2 x Base x Slant Height
Circle	Area = 0.785 x $(\text{Diameter})^2$
Ellipse	Area = 0.785 x Short Diameter x Long Diameter
Parabola	Area = 2/3 Base x Height
Sphere	Area = 3.14 x $(\text{Diameter})^2$
Cylinder	Area = 3.14 x Diameter x Length
Cube	Area = 6 x Side x Side
Hexagon	Area = 3/2 x Length of Side x Distance Between the Parallel Sides

CHAPTER 2
PREPARATION OF BASIS METAL FOR COATING

2.1 PURPOSE.

This chapter provides general information on metal cleaning and stress-relieving.

2.2 GENERAL.

a. The preplating process used for any particular part depends upon the metallurgy of the part as received for coating, the coating to be applied, and the requirements for the finished part.

b. Preplating processes must produce a surface having desired physical and metallurgical properties. Parts must have the required dimensions and suitable surface characteristics before plating and be metallurgically acceptable.

c. The postplating process used for any particular part will depend upon the metallurgy of the part, the preparation method, the coating applied, and the requirements of the finished part.

2.3 STRESS-RELIEF.

Ferrous metal parts when cold worked, machined, ground, cold-straightened, perforated, stamped, etc. develop internal stresses caused by a grain deformation or other disruption to the orderly atomic lattice arrangement. This stress must be relieved, particularly in parts with a hardness of Rockwell C33 or above, to alleviate adhesion and cracking problems of plated deposits or premature failure of parts in service. This stress can be relieved by heat treating the part to 191° ± 14°C (375° ± 25°F) for a minimum of 3 hours or by shot-peening the part in accordance with SAE AMS-S-13165; or by a combination of methods. Consult instructions on individual parts or instructions contained in this manual for specific stress-relieving instructions.

2.4 CLEANING.

a. The success of a coating operation depends largely upon the cleaning of the metal prior to its application. The degree of cleanliness required will depend upon the process being performed. Finishing operations such as chromating, electropolishing, and phosphating do not require as high a degree of cleanliness as does electroplating. This is so because the chemical action of the coating solution provides some of the required cleaning. Plating is often considered the most complicated stage but it is not the most important stage since a part cannot be successfully plated until it has been properly cleaned and activated. Metal surfaces are passive and must be activated and remain so until covered by a metallic coating. If the surface repassivates, any attempt at satisfactory plating will be futile.

b. The general steps in the preparation of a surface for coating are (1) precleaning, (2) descaling, (3) activation, (4) conditioning, if necessary, and (5) coating. The following factors must be considered when developing a coating process:

1. Surface to Be Processed
2. Basis Metal of the Article
3. Foreign Material to Be Removed
4. Degree of Cleanliness Required
5. Quantity of Items to Be Processed
6. Size of the Article
7. Equipment Available for Cleaning
8. Activation of the Basis Metal
9. Conditioning of the Surface to Receive the Coating
10. Cost of Materials and Equipment
11. Disposal of Spent Materials and Solutions
12. Safety

c. The composition, physical properties, and chemistry of the basis metal greatly influence the selection of the cleaning procedure. The condition of the metal is equally important. The cleaning medium must also be compatible with the metal being processed. A cleaning process that does an excellent job of removal of contaminants but severely attacks the basis metal is undesirable. Therefore, it is important to select a medium which will not attack the metal, while it effectively removes the contamination. Whatever the coating cycle, it must be as simple as possible yet effective. Inasmuch as a properly designed cycle will result in quality items, improper cleaning will lead to rejects and increased operating expenses.

2.5 PRELIMINARY CLEANING.

a. The preparation of an item for coating can be divided into two major areas: (1) preliminary cleaning, which involves the removal of grease, oil, drawing and buffing compounds, corrosion prevention compounds, etc., and the removal of scales, rust, etc.; and (2) final treatment, which involves the removal of residual soil and the last traces of oxides.

b. The first step in a cleaning process is the removal of grease, oil, corrosion prevention compounds, and other materials with a greasy consistency. This type of foreign material will quickly contaminate the remaining steps in a cleaning cycle. This material can be removed by (l) solvent cleaning, (2) emulsion cleaning, (3) alkaline cleaning, or (4) electrolytic cleaning.

2.5.1 Solvent Cleaning.

a. Solvent cleaning is done using any suitable solvent such as perchloroethylene, trichloroethylene, etc. The solvent is generally used hot and cleaning is done by spraying, soaking, condensation of vapor on the work (vapor degreasing), or a combination of the methods.

b. Vapor degreasing is the most efficient method of solvent cleaning. The soiled work is suspended in the vapor zone where the solvent vapors condense on the cool metal surface. As the condensate runs from the part, it takes with its grease and loose foreign materials. As the work is washed with the condensed solvent, it tends to heat the work, which causes it to quickly dry when raised above the vapor zone. If foreign material remains after vapor degreasing, it should be removed with a nonmetallic scraper, allowed to cool, and the vapor degreasing repeated. Removal of foreign material may be facilitated by spraying the work with solvent before removal from the vapor zone.

2.5.2 Emulsion Cleaning. Emulsion cleaning employs a 2-phase medium composed of an organic solvent, detergent, and water. The medium is usually lightly alkaline and is used hot, 60° – 82°C (140° – 180°F). The emulsion is sprayed on the work by a power spray washer. Emulsification loosens the soil and permits it to be flushed away. Emulsion cleaning must be followed by thorough rinsing in hot water or by hot spray rinsing to remove traces of organic solvent or other cleaning by-products.

2.5.3 Alkaline Cleaning. Alkaline cleaners are composed of alkaline salts such as potassium or sodium hydroxides, silicates, phosphates or carbonates, plus sequestering agents, dispersants, and various wetting agents. Cleaning is done at elevated temperatures, 52° – 93°C (125° – 200°F), by spraying or immersion. Generally, these cleaners are used to remove greasy materials but are often used as a secondary cleaner after emulsion cleaning.

2.5.4 Electrolytic Alkaline Cleaning.

a. These solutions are the same or similar to those used for alkaline cleaning, but the effectiveness of the solution is enhanced by the application of electrical current. The work is suspended in the solution and current applied to make the part anodic. The gas formed at the surface of the work provides a scrubbing action that aids in the removal of the foreign materials. Electrocleaning is generally rapid; however, the solution becomes contaminated so rapidly that its use is impractical unless the part has been processed through a solvent cleaner.

b. If the latter three types of cleaning are employed, the solution alkalinity, temperature, and treatment time must be adjusted for the type of metal being processed. This adjustment requirement could lead to trouble if many different metals must be processed through the same cleaning line.

2.6 MECHANICAL TREATMENT.

The removal of scale, rust, etc. can be done by mechanical methods or acid pickling. However, to hold hydrogen embrittlement to a minimum, only mechanical cleaning methods will be considered for Air Force use.

2.6.1 Abrasive Blast Cleaning. Abrasive blasting is a process of cleaning and finishing of materials accomplished by propelling abrasive particles, either dry or suspended in a liquid medium, against the surface of the work piece. Abrasive blasting is used to (1) remove rust, scale, paints, dry soils, carbon deposits, etc.; (2) roughen surfaces before bonding, plating, painting, or other coating applications to increase adhesion of the coating; (3) remove surface defects such as burrs, feathers, and metal fuzz; and (4) develop a matte surface finish. Abrasive blasting is considered an economical process, not only in man-hour reduction — as compared to alternate cleaning processes — but also in equipment cost, maintenance, disposition of spent media, and training of personnel. There are several methods of propelling the abrasives used in blast cleaning and a great variety of abrasive mediums. The success of the blasting operation depends upon the selection of the abrasive, its shape and size, abrasive impact velocity, volume of abrasive per unit of time, direction and angle of impact, and procedures in handling the work.

a. Dry Blast Cleaning – dry blasting is accomplished by propulsion of the media (1) by centrifugal force to the work piece from a power driven rapidly rotating bladed wheel or (2) by air pressure blasting, which includes both the direct pressure and the induction type that may be used with either the

gravity or the suction principle. Air pressure blasting is used for low production or intermittent operations and is particularly suited for relatively small to medium size parts that have intricate designs and varying cross-sections. Normally, there is no problem as to work size, but some difficulty will be experienced in the removal of contaminants from deep recesses, blind pockets, and some interior diameters. Since the driving force of the abrasive is relatively high during dry blasting, the selection of the abrasive type, size, and air pressure is critical in the blasting of soft metals to prevent surface damage. This process is unsuitable for cleaning parts for which dimensional or surface finish requirements are critical and should not be used on threaded sections, gear tooth profiles, or on thin materials that may become distorted.

b. Wet Blast Cleaning – wet blasting differs from dry blasting in that the abrasive particles are usually finer and are suspended in water to which an anti-set and a corrosion prevention compound has been added. This slurry, which is continually agitated to prevent settling, is forced by compressed air through a nozzle/nozzles to the surface of the work piece to remove contaminants. Wet blast cleaning is used for the removal of trace surface contaminants, blending of finishing lines, removal of feather edges, surface preparation for anodizing, plating, or other applied coatings. It is not intended for the removal of heavy corrosion, coarse burrs, or heavy soils.

2.6.2 Abrasives.

a. The blasting media may be grit conforming to Specification A-A-59316; glass beads conforming to Specification SAE AMS 2431, or miscellaneous materials such as crushed walnut or pecan shells, rice hulls, rye husk, sawdust, peach pits, etc.

b. Grit consists of aluminum oxide, emery, garnet, silicon carbide, diatomaceous silica, and tripoli. These are hard materials which have a fast cutting action and a slow breakdown rate. They are used on all hard metals for removing heavy corrosion and producing a rough work surface. They are not to be used on such surfaces as gear teeth, threaded areas, or on parts where close dimension tolerances or surface finishes are required. These abrasives may be used either in wet or dry applications.

c. Glass beads are made of high grade crown glass of the soda lime type. They have a fast and effective cleaning action but a rather rapid breakdown. They may be used on all metals to remove both heavy and light corrosion, for polishing and for finishing. When blasting soft metals, the nozzle pressure must not exceed 40 psi if surface damage is to be avoided. Glass beads may be used either wet or dry.

d. Miscellaneous materials such as novaculite, diatomaceous silicon, tripoli, and the agricultural products have moderate cleaning ability and can be used for cleaning the soft metals.

2.6.3 Cleaning Processes.

a. CP-1 – Dry Glass Bead Blast.

(1) Parts shall be dry and free from oil, grease, etc.

(2) Protect all areas of part that may be detrimentally affected by blasting.

CAUTION

The blasting nozzle should be held at an angle of approximately 45° to the part and no area should be dwelled upon longer than necessary as deterioration of the basis metal will occur.

NOTE

Blasting shall be done using the lowest pressure to do the job adequately. Do not exceed 40 psi on aluminum or magnesium parts.

(3) Blast area requiring plating with glass beads conforming to SAE AMS 2431, Size 13, using a nozzle pressure not to exceed 100 psi.

(4) Blow off excess blasting media with shop air.

WARNING

In accordance with OSHA Standard 1910.242, compressed air, when used for cleaning, is restricted to less than 30 psi. Use personal protective equipment (goggles/faceshield) to provide protection from flying particles.

b. CP-2 – Dry Abrasive Blasting (using A-A-59316 grit).

(1) Parts shall be dry and free from oil, grease, etc.

(2) Protect all areas of part that may be detrimentally affected by blasting.

CAUTION

The blasting nozzle shall be held at an angle of approximately 45° to the part and no area shall be dwelled upon longer than 5 seconds as deterioration of the basis metal will occur.

NOTE

Blasting shall be done using the lowest pressure to do the job adequately.

(3) Blast area requiring plating with 80 – 220 grit using a nozzle pressure not to exceed 100 psi.

(4) Blow off excess blasting media with shop air.

WARNING

Compressed air when used for cleaning is restricted to less than 30 psi in accordance with OSHA Standard 1910.242. Protective equipment (goggles/faceshields) shall be worn to prevent personal injury from flying particles.

c. CP-3 – Hand Scrub with Pumice Grade FFF.

(1) Scrub area to be plated with pumice (Grade FFF) using a bristle brush or other suitable applicator.

(2) Cold water rinse.

(3) Check for water breaks.

NOTE

If water breaks occur, repeat Step (1) through Step (3).

(4) Dip part in a solution containing 2 oz/gal Metrolux or equivalent to retard corrosion until part is processed.

d. CP-4 – Wet Glass Bead Blasting.

(1) Mask part as required.

(2) Blast with glass bead nozzle gun using a slurry of water and glass beads SAE AMS 2431, Size 13, with a maximum nozzle pressure of 40 psi.

NOTE

Higher nozzle pressure may be utilized provided soft masking materials are not used and no damage is done to the item.

(3) Pressure rinse with cold water.

(4) Check for water breaks.

NOTE

If water breaks occur, repeat Step (2) through Step (4).

(5) Dip in solution containing 2 oz/gal Metrolux or equivalent to retard corrosion until part is processed.

2.7 FINAL TREATMENT.

Work that has reached the final preparation for coating shall be free of greasy materials and heavy corrosion products. The next step in the cleaning process is the removal of any last traces of soils that have eluded the preliminary treatment steps.

2.7.1 Electro Cleaning. In this step, the work piece is immersed in an alkaline cleaner and usually either reverse, direct, or periodic reverse current is applied. The gas generated and evolution on the work piece dislodges and removes contaminants. This treatment usually lasts for 1 – 3 minutes and utilizes approximately 6 volts current.

a. Anodic Cleaning.

(1) In anodic cleaning, the work is made the anode (positive) in an alkaline cleaner at a low voltage (usually 6V). The current density will vary with size and number of parts. Cleaning time will be dependent upon type of metal being processed.

(2) Anodic cleaning is preferable because the metal is actually being dissolved as well as cleaned. This action removes metallic smuts and prevents the deposition of nonadherent metallic films. The oxygen generated creates a scrubbing action that assists soil removal. Also hydrogen embrittlement is avoided by using anodic cleaning. Prolonged reverse cleaning, at high current densities, is to be avoided.

(3) Anodic cleaning is not recommended for aluminum, chromium, lead, and other metals soluble in alkaline electrocleaners.

b. Cathodic Cleaning.

(1) In cathodic cleaning, the work is made the cathode (negative) in an alkaline cleaner at a

low voltage (6V). Cleaning time will vary as to the type of metal being processed. The hydrogen gas liberated at the cathode creates a scrubbing action, as does oxygen in anodic cleaning. However, there is twice as much hydrogen gas generated as oxygen which results in greater scrubbing action.

(2) Unlike anodic cleaning, the basis metal is not dissolved and any positively charged material in the cleaning medium may be attracted to and deposited on the work, thus resulting in poor adhesion, roughness, and staining of the plated deposit. Also parts subject to hydrogen embrittlement may become embrittled.

c. Periodic Reverse Cleaning – in periodic reverse cleaning, the work is made alternately cathodic and anodic using approximately 6 volts direct current. It is used generally to remove oxide, scale, and smut from ferrous metals. Cleaning is accomplished by incorporating the mechanism of alkaline cleaning and the use of oxidizing and reducing conditions. This type cleaning does not dissolve as much metal as anodic cleaning and does not cause positively charged materials to be deposited on the work item, provided the process is stopped at the end of the anodic cycle.

2.7.2 Acid Cleaning. Alkaline cleaning is usually followed by acid cleaning. This treatment neutralizes residual alkaline films, removes the last traces of oxides that may be present, and provides a microetch on the surface which improves adhesion of the coating. The strength of the acid and treatment time will vary with the basis metal. Table 2-1 shall serve as a guide in selecting the proper etch for the basis metal.

Table 2-1. Acid Dips

Aluminum Alloys [1]	25 – 50% (Vol) Nitric acid 25% (Vol) Sulfuric acid
Copper Alloys	4 – 10% (Vol) Sulfuric acid 10 – 20% (Vol) Hydrochloric acid 10 – 20% (Vol) Fluoboric acid
High Carbon Steel	10% (Vol) Hydrochloric acid 120 g/L (16 oz/gal) Dry acid salts 10% (Vol) Sulfuric acid
Lead Alloys	10 – 25% (Vol) Fluoboric acid 2 – 10% (Vol) Hydrofluoric acid 20% (Vol) Hydrochloric acid
Low Alloy Steel	10 – 50% (Vol) Hydrochloric acid 4 – 10% (Vol) Sulfuric acid 120 – 300 g/L (16 – 40 oz/gal) Dry acid salts 10 – 50% (Vol) Hydrochloric acid
Nickel Alloys	5 – 15% (Vol) Sulfuric acid 10 – 50% (Vol) Hydrochloric acid
Stainless Steel [2]	20 – 50% (Vol) Hydrochloric acid 5 – 50% (Vol) Sulfuric acid 25% (Vol) Sulfuric acid and 5% (Vol) Hydrofluoric acid 120 – 300 g/L (16 – 40 oz/gal) Dry acid salts
Zinc Alloys	¼ – 1% (Vol) Hydrochloric acid ¼ – 1% (Vol) Sulfuric acid ¼ – 1% (Vol) Hydrofluoric acid

[1] Must be followed by a zincate film prior to subsequent plating.
[2] Must be followed by a nickel strike except for chromium plating, where no strike is necessary.

2.8 MASKING.

a. When plating is to be applied only to a specific area of an item, the other areas must be masked off. This is usually done by immersing the part and holding fixture into the masked material then selectively removing the maskant from those areas requiring plating. Stopping off or masking is one of the keys to successful plating. If the maskant is not properly applied, the entire plating cycle will be futile.

b. A good maskant must be easy to apply, adhere tightly to the metal surface for the entire plating cycle, must not become soft at the bath temperature, must be resistant to all processing solutions, must be nonconductive, and easily removed at the conclusion of the plating operation.

c. Masking may be accomplished by using masking fixtures, wax, lacquer, tape, rubber, plastic, or foils. The choice of maskant depends primarily on the type of solutions involved, temperature of the solutions, length of plating cycle, and nature of precleaning operations.

2.8.1 Types of Maskants.

a. Wax.

(1) Wax is one of the most complete and fail-safe maskants in solutions with temperatures up to 60°C (140°F). It has a long pot life, little odor, a low melting temperature, and is economical in that it has a low initial cost and can be reused repeatedly provided it is thoroughly rinsed between uses. Wax can be easily removed from parts by immersion in hot water or a molten wax bath, 121°C (250°F), followed by vapor degreasing, or by heating in an oven equipped with a drip pan to catch the molten maskant.

(2) Wax also has its disadvantages in that it (1) requires more preparation of the part prior to application of the wax, (2) requires repeated immersions to obtain necessary coating thickness, (3) when cold and set, it becomes too brittle to properly trim, (4) is easily chipped when struck a blow on the edge of a tank, etc., (5) is opaque and causes some difficulty in locating the boundaries to be trimmed, and (6) must be carefully removed from the surface to be plated.

b. Plastic Maskants.

(1) These maskants are applied as are waxes, but generally one immersion is sufficient to obtain necessary coverage. The advantages of using plastic maskants are (1) they are usually transparent, which eases the job of selective removal from specific areas, (2) they don't get brittle when cold, (3) areas to be plated don't require as careful cleaning as do waxed surfaces, and (4) they can operate at high solution temperatures.

(2) Plastic maskants also have their disadvantages in that they (1) require special tanks and ventilation systems, (2) require high operation temperatures, 138° – 193°C (280° – 380°F), (3) have a low flash point, (4) have an undesirable odor, (5) are sometimes difficult to remove after plating, and (6) are expensive in that they are expensive to purchase and generally are used once then discarded.

c. Tapes – lead-backed adhesive tape conforming to commercially equivalent products under NSNs 7510-00-530-5511, 7510-00-530-5512, 7510-00-530-5514, 7510-00-584-5953, 7510-00-664-0001, and 7510-00-841-5394 are excellent for short plating cycles. The tape is wound tightly around the article with each turn overlapping the edge of the preceding layer to prevent leakage under the tape. This type of masking is easy to apply and remove but may prove more expensive in some applications because of its one-time use. Vinyl tapes without adhesive substances are also available and are applied as are adhesive backed tapes. These tapes are also satisfactory for short plating times and can be washed and reused several times before disposal.

d. Rubber or Synthetic Shields – this type of mask is generally shop-fabricated and may be used many times before disposal. These shields are form fitted and either snap in place or are secured in place by wire or lead foil tapes. Molded or fabricated shields are easy to apply and remove and can drastically reduce masking time. Slip-on mask may permit some solution leakage; therefore, water rinse operations must be extremely thorough to insure the removal of all chemicals before proceeding to the next processing solution.

Table 2-2. Process I Masking Procedure

Step	Operation	Time	Solutions, Materials, and Current	Temp °C	Temp °F
1	Vapor degrease part. Procedure: a. Lower part into vapor and allow it to attain the temperature of the vapor. b. Slowly remove part from vapor and allow all liquid to drain from it. c. Examine to determine if all foreign matter has been removed. If foreign matter remains, remove it with a nonmetallic scrapper and repeat above steps.	As Req'd	ASTM D4081 and ASTM D4376 (Tetrachloroethylene)	120 – 124	248 – 257
			ASTM D4080 (Trichloroethylene) **NOTE** Not to be used where by state regulations.	88 – 90	187 – 194
2	Clean area to be plated if necessary.	As Req'd	CP-1 Alternates: CP-2, CP-3 or CP-4		
3	Examine surface to be plated. **NOTE** • Unless otherwise specified, surfaces of metal parts to be plated shall be smooth, and substantially free from blemishes, pits, tool marks, and other irregularities. • All heat treating, welding, machining forming, straightening, and shot-peening shall be completed prior to plating unless surfaces are plated to aid the operation.	As Req'd			
4	Measure part to assure that proper plating thickness can be applied and that part is not beyond repair limits.	As Req'd			
5	Tape areas as required.	As Req'd			

Table 2-2. Process I Masking Procedure - Continued

Step	Operation	Time	Solutions, Materials, and Current	Temp °C	Temp °F
6	Assemble parts on/in plating fixture. **NOTE** • Electrical contacts between parts and supporting wires or fixtures and between supporting wires and bus bars shall be made in such manner as will ensure that neither electrical arcing nor localized overheating will occur. • If parts are to be plated all over, contact points between the parts and the plating fixture shall be located where specified on the drawing or as agreed upon by the service engineer responsible for the part. On other parts, contact points shall be located where plating is not required or is optional.	As Req'd			
7	Install mechanical mask if used. **NOTE** Parts must be masked to prevent inadvertent stripping or plating of areas other than those required.	As Req'd			
8	Apply maskant to areas requiring masking.	As Req'd	Micro Crystalline non-cholorinated wax Alternates: MIL-P-23242 or suitable substitute	As Req'd by manufacturer	

Table 2-2. Process I Masking Procedure - Continued

Step	Operation	Time	Solutions, Materials, and Current	Temp °C	Temp °F
	a. Wax procedure. **NOTE** All sharp edges not to be plated should be covered with tape to facilitate waxing. Wax removal from threaded areas can be facilitated by coating with a paste of Glycerol and pumice, zinc oxide, or talc. This wax must be rinsed before being put back into wax tank.				
	1. Immerse part and rack in wax. **NOTE** To insure good adhesion between wax and part, allow part to remain in wax until it has attained the temperature of the wax. Then, remove.	As Req'd		116 – 127	240 – 260
	2. Allow wax to set.	As Req'd			
	3. Apply subsequent coat of wax. **NOTE** Immerse part in wax for several seconds then withdraw it.	As Req'd		77 – 88	170 – 190
	4. Allow wax to set.				
	5. Repeat above steps until sufficient layers have been applied to insure adequate coverage of all areas not to be plated.	As Req'd			

Table 2-2. Process I Masking Procedure - Continued

Step	Operation	Time	Solutions, Materials, and Current	Temp °C	Temp °F
	6. Remove wax from specified areas. **NOTE** This operation can be simplified by applying masking tape to this area prior to initial coat of wax and leave the end of it loose so that it can be pulled after waxing is complete.	As Req'd			
	7. Trim wax around area to be plated with a sharp edged instrument to remove any wax that may interfere with plating operation.	As Req'd			
	8. Remove any residual wax by wiping area with a cloth or cotton moistened with solvent.	As Req'd	Tetrachlorethylene or other suitable solvent **NOTE** Adequate ventilation must be provided.	Room	Room
	b. Plastic maskant procedure.	As Req'd			
	1. Immerse part and rack in maskant.				
	2. Allow maskant to flow over all areas of parts and rack.				
	3. Remove and allow maskant to cool.				
	4. Cut around specified areas and remove maskant.				
	5. Trim maskant.	As Req'd	Tetrachlorethylene or other suitable solvent		
	6. Wipe area with a cloth or cotton moistened with solvent.		**NOTE** Adequate ventilation must be provided.		
9	Clean area to be plated.	As Req'd	CP-4 Alternates: CP-3, CP-2		

Table 2-2. Process I Masking Procedure - Continued

Step	Operation	Time	Solutions, Materials, and Current	Temp °C	Temp °F
10	Rinse to remove cleaning media.	As Req'd	Water	Room	Room
11	Check for water breaks on surface to be plated. **NOTE** If water breaks occur repeat Steps 9 and 10.	As Req'd			
12	Immerse part in corrosion prevention solution.	10 – 30 sec	C-422	Room	Room

CHAPTER 3
BRASS ELECTRODEPOSITION

3.1 PURPOSE.

This chapter provides instructions for the electrodeposition of brass.

3.2 GENERAL.

The most extensive use of brass plating is for decorative purposes. It is widely used as a substitute for solid brass where weight and cost are a factor. Brass is also used to promote bonding of rubber to steel. In earlier days, it was used for reducing friction on engine parts and as a corrosion protection when covered with a supplementary coating of lacquer. A bright brass finish is usually bright nickel plated then brass flashed. Several copper-zinc alloys can be plated but the usual ratio is 80% copper and 20% zinc.

3.3 PLATING APPLICATION.

a. Unless otherwise specified, the basis metal shall be free from visible defects that will be detrimental to the appearance or protective value of the plating.

b. The plating shall be applied after all basis metal heat treatments and mechanical operations such as machining, brazing, welding, forming, and perforating of the article have been completed.

3.4 UNDERPLATING.

Brass can be plated directly on steel; however, it is preferable to strike cast iron with copper or copper-nickel prior to brass plating. In the case of aluminum, a coating of zincate must be applied before subsequent plating.

3.5 PLATING.

The plating shall be smooth, fine-grained, adherent, uniform in appearance, and free from blisters, pits, nodules, and indications of burning. Superficial staining, resulting from rinsing or baking operations will not be cause for rejection.

3.6 EQUIPMENT.

3.6.1 Tank Construction. Tanks are generally constructed of mild steel lined with rubber or plastic to prevent ferrocyanide contamination.

3.6.2 Ventilation. The plating tank shall be equipped with a positive ventilation system capable of meeting or exceeding the ventilation requirements of Air Force Occupational Safety and Health Standard (AFOSHSTD) 48-2.

3.6.3 Filtration. Continuous solution filtration through activated charcoal should be provided to the plating solution. Rate of filtration should be sufficient to provide a minimum of 1 complete turnover of solution per hour; filter material may be cotton, nylon, Dynel, polypropylene, or polyvinyl chloride.

3.6.4 Agitation.

a. Mechanical agitation should be provided unless solution turnover from filtration is sufficient to eliminate gas bubbles on the surface being plated.

b. Do not use air agitation. Introduction of oxygen into the bath results in decomposition of cyanides.

3.6.5 Anodes. The anodes shall be made of solid brass conforming to the chemical composition (78 – 82% Cu, 18 – 22% Zn). Anodes may be spherical, elliptical, flat, or bar shaped and are suspended from a metal bar connected to the positive terminal of the power supply. Before new anodes are used, they should be etched in diluted nitric acid. Because anodes do not corrode in the absence of current, they do not need to be removed from an idle bath.

3.6.6 Power Source. Electrodeposition requires Direct Current (DC) which can be supplied from either generators or rectifiers. Most plating solutions operate between 0 and 14 volts. However, if plating is to be done on large parts at high current densities and with large anode-cathode distances, increased voltage may be necessary. Ripple value as measured with a true RMS voltmeter connected across the anode and cathode buss at the tank shall not exceed 10% of the DC operating voltage. Power sources will be certified semi-annually. Certification shall include a check of ripple, proper functioning of controls, and accuracy of all meters, counters, and timers which are integral parts of the power source.

3.7 BATH CHARACTERISTICS.

WARNING

Many plating solutions produce toxic mist and vapors, some of which are cumulative in nature. Therefore, precautions should be taken to avoid inhalation of fumes and any contact with skin or clothing.

a. The brass plating solution is composed of copper cyanide, zinc cyanide, sodium cyanide, sodium

carbonate, Rochelle salts, and ammonium hydroxide.

b. The bath operates between 24° – 49°C (75° – 120°F) and at a current density of 0.3 – 0.5 A/dm^2 (3 – 5 ASF). It has high covering and throwing power. The bath efficiency ranges between 55 – 95% and is greatly influenced by bath temperature, agitation, and current density. Solution composition, copper to zinc ratio, pH, free cyanide, and ammonia content, as well as rate of agitation, current density, and bath temperature have a marked effect on the composition and color of the deposit. The deposit composition cannot be regulated simply by regulating the solution composition.

c. If the plated deposit is high in copper content, it can be lowered by (1) higher current density, (2) lower bath temperature, (3) raising the pH, (4) adding zinc cyanide, and (5) lowering the free cyanide content. Zinc content can be lowered by (1) lower current density, (2) high bath temperature, (3) lower pH, (4) adding copper cyanide, and (5) increasing the free cyanide content. When a given alloy composition is desired for a particular application, all variables must be closely controlled to retain those characteristics.

d. The bath should be continually filtered through activated charcoal to minimize organic contamination and remove sludge residue from the solution to reduce roughness of plated deposit.

e. The observance of the anodes can give clues to the operation and condition of the bath. A brown to black nonconductive film on the anode indicates the presence of copper. A dark anode film and an olive-green plated deposit indicates lead contamination. Arsenic will cause a very pale deposit and a dark gray film on the anode that disappears with the application of current. A greenish-white anode indicates low free cyanide or excess carbonate while a white film on the anode and a dark plated deposit indicates the presence of tin. If there is no cathode deposit when current is applied and the anode is bright, the cyanide content is too high.

3.8 TROUBLESHOOTING.

Refer to Chapter 28.

Table 3-1. Plating Speed at 50% Cathode Efficiency

Average Thickness in Inches	A/dm^2 (ASF)				
	0.32 (3)	0.38 (3.5)	0.43 (4)	0.48 (4.5)	0.54 (5.0)
0.00001	3.9	3.3	2.9	2.6	2.3
0.00002	7.8	6.7	5.9	5.2	4.7
0.00003	11.7	10.0	8.8	7.8	7.0
0.00004	15.6	13.4	11.7	10.4	9.4
0.00005	19.5	16.7	14.6	13.0	11.7
0.00006	23.4	20.1	17.6	15.6	14.0
0.00007	27.3	23.4	20.5	18.2	16.4
0.00008	31.2	26.7	23.4	20.8	18.7
0.00009	35.1	30.1	26.3	23.4	21.1
0.0001	39.0	33.4	29.3	26.0	23.4
0.0002	78.0	66.9	58.5	52.0	46.8
0.0003	117.0	100.3	87.8	78.0	70.2
0.0004	156.0	133.7	117.0	104.0	93.6
0.0005	195.0	167.1	146.3	130.0	117.0
0.0006	234.0	200.6	175.5	156.0	140.4
0.0007	273.0	234.0	204.8	182.0	163.8
0.0008	312.0	267.4	234.0	208.0	187.2
0.0009	351.0	300.9	263.3	234.0	210.6
0.001	390.0	334.3	292.5	260.0	234.0

Table 3-1. Plating Speed at 50% Cathode Efficiency - Continued

Average Thickness in Inches	A/dm² (ASF)				
	0.32 (3)	0.38 (3.5)	0.43 (4)	0.48 (4.5)	0.54 (5.0)
0.002	780.0	668.6	585.0	520.0	468.0
	Time in Minutes				

Table 3-2. Brass Stripping Procedure

Step	Operation	Time	Solutions, Materials, and Current	Temp °C	Temp °F
1	Vapor degrease. **WARNING** Solvent vapors are toxic. Avoid inhalation of vapors or contact with skin or clothing.	As Req'd	ASTM D4081 and ASTM D4376 (Tetrachloroethylene) Alternates:	120 – 124	248 – 256
			ASTM D4080 (Trichloroethylene) **NOTE** Not to be used where prohibited by state regulations.	88 – 90	187 – 194
2	Mask for stripping if necessary.	As Req'd			
3	Strip old plating.	As Req'd	C-101 2 – 6 Volts Anodic Alternates:	20 – 25	68 – 77
			C-106 Immersion Only	49 – 54	120 – 130
4	Rinse.	As Req'd	Water	Rm – 82	Rm – 180
5	Examine for completeness of strip. Repeat Steps 3 through 5 if necessary.	As Req'd			
6	Remove masking.	As Req'd			
7	Rinse.	As Req'd	Water	49 – 82	120 – 180
8	Dry.	As Req'd	Shop Air	Room	Room
9	Preserve ferrous metal parts with corrosion prevention compound if necessary.	As Req'd	MIL-PRF-16173, Grade 3 Alternates:	Room	Room
			MIL-C-82594	Room	Room
			MIL-PRF-32033	Room	Room

Table 3-3. Brass Electroplating Procedure

Step	Operation	Time	Solutions, Materials, and Current	Temp °C	Temp °F
1	Stress-relieve all ferrous parts having a hardness of Rockwell C 40 or above which have been machined, ground, cold-formed, or cold-straightened.	3 hrs MIN		191 ± 14	375 ± 25
2	Prepare part for plating.	As Req'd	Table 2-2		
3	Alkaline clean. Current to be OFF when immersing or withdrawing parts.	1 – 3 min	C-201 3 – 6 volts Anodic Alternates:	52 – 57	125 – 135
			C-203 3 – 6 volts Anodic	52 – 57	125 – 135
			C-204 3 – 6 volts Periodic reverse cycle, 10 sec anodic, 10 sec cathodic. End on anodic cycle.	52 – 57	125 – 135
4	Rinse.	15 – 60 sec	Water	Room	Room
5	Etch. **NOTE** If smut is present after etch operation repeat Steps 3 through 5 and eliminate current on Step 5.	30 – 60 sec	C-301 Immersion Only Alternates:	Room Room	Room Room
			C-308 21.5 A/dm^2 (200 ASF) Anodic	Room	Room
			C-315 Immersion Only	Room	Room
6	Rinse.	15 – 60 sec	Water	Room	Room
7	(OPTIONAL STEP) Copper strike. Current to be ON when immersing or withdrawing parts.	4 – 7 min	C-411 Apply 2.6 A/dm^2 (24 ASF) current for 2 minutes; then reduce to 1.3 A/dm^2 (12 ASF) for 2 – 5 minutes.	38 – 54	100 – 130
8	Rinse.	15 – 60 sec	Water	Room	Room
9	(OPTIONAL STEP) Nickel strike. Current to be ON when immersing or withdrawing parts.	8 – 12 min	C-412 3.2 A/dm^2 (30 ASF) Alternates:	46 – 54	115 – 130
			C-414 3.2 A/dm^2 (30 ASF)	46 – 54	115 – 130
10	Brass plate.	As Req'd	C-401 0.2 – 0.5 A/dm^2 (3 – 5 ASF)	24 – 38	75 – 100

Table 3-3. Brass Electroplating Procedure - Continued

Step	Operation	Time	Solutions, Materials, and Current	Temp °C	Temp °F
11	Rinse.	15 – 60 sec	Water	Rm – 82	Rm – 180
12	Dry.	As Req'd	Shop Air	Room	Room
13	Remove masking.	As Req'd			
14	Inspect deposit. **NOTE** An acceptable brass deposit shall be smooth, fine-grained, adherent, and free from blisters, pits, nodules, and indications of burning. Superficial staining is no cause for rejection.	As Req'd			
15	Bake as required. Less than RC 40. RC 40 – RC 43. RC 43 – RC 49. RC 49 or above. **NOTE** Embrittlement relief will be initiated within 4 hours after plating.	MIN Times — 3 hrs 8 hrs 23 hrs		191 ± 14	375 ± 25
16	Reinspect deposit.	As Req'd			
17	Preserve ferrous parts with corrosion prevention compound if necessary.	30 – 60 sec	MIL-PRF-16173, Grade 3 Alternates:	Room	Room
			MIL-C-82594	Room	Room
			MIL-PRF-32033	Room	Room

CHAPTER 4
BRONZE ELECTRODEPOSITION

4.1 PURPOSE.

This chapter provides instructions for the deposition of a bronze alloy consisting of 10 – 15% tin and 85 – 90% copper.

4.2 GENERAL.

Bronze is a copper rich copper-tin alloy which can be produced in varying colors ranging from reddish to nearly white by altering the temperature, free cyanide and alkali contents, and current density. It has good corrosion, tarnish and wear resistance, and a high melting point (approximately 1800°F). Bronze can be buffed to a high luster and can be easily soldered. Bronze is used both for decorative and engineering purposes. Its main engineering applications are as an undercoating for other metals (better than copper for corrosion protection); as a hard bearing surface; as an undercoating (to enhance the adhesion of rubber to steel), and as a STOP-OFF in nitriding operations.

4.3 PLATING APPLICATION.

Unless otherwise specified, the plating shall be applied after all basis metal heat treatments and mechanical operations such as machining, brazing, welding, forming, and perforating of the article have been completed. The basis metal shall be free from visible defects that will be detrimental to the appearance or protective value of the plating, or the intended use of the article.

4.4 UNDERPLATING.

Unless otherwise specified, the plating will be applied directly on the basis metal except in the case of aluminum where a preliminary zincate coating followed by a cyanide copper strike is permissible. In no case shall any underplating be substituted for any part of the specified bronze thickness.

4.5 PLATING.

The plating shall be smooth, fine-grained, adherent, and free from blisters, pits, nodules, indications of burning, and other defects detrimental to the intended use of the article. Superficial staining resulting from rinsing or baking operation will not be cause for rejection.

4.6 EQUIPMENT.

4.6.1 Tank Construction. The plating tank can be constructed of rubber, plastic, steel, or stainless steel. A mild steel tank lined with polyvinyl chloride is recommended to prevent stray currents, deposition of bronze on tank walls, and iron contamination.

4.6.2 Ventilation. The plating tank shall be equipped with a positive ventilation system capable of meeting or exceeding the ventilation requirements of AFOSHSTD 48-2.

4.6.3 Filtration. Continuous filtration through activated carbon should be provided. Rate of filtration should be sufficient to provide a minimum of one complete turnover of solution per hour. Filter material may be cotton, Dynel, nylon, polypropylene, or polyvinyl chloride.

4.6.4 Agitation. The solution needs no agitation except after chemical additions. Continuous filtration will provide adequate agitation.

4.6.5 Anodes. The anode system may be constructed several ways: (1) separate circuits, one of which contains copper anodes and the other containing tin anodes, the current is regulated to determine the amount and type of metal being dissolved into the solution, (2) by use of anodes only and additions of sodium stannate to replace tin ions, or (3) by use of bronze anodes provided they contain no more than 12% tin. Since deposit composition varies with different current densities, auxiliary conforming anodes must be used on parts with complex configurations if the metallic deposit composition must be constant over the entire article.

4.6.6 Power Source. Electrodeposition requires Direct Current (DC) which can be supplied from either generators or rectifiers. Most plating solutions operate between 0 and 14 volts. However, if plating is to be done on large parts at high current densities and with large anode-cathode distances, increased voltage may be necessary. Ripple value as measured with a true RMS voltmeter connected across the anode and cathode buss at the tank shall not exceed 10% of the DC operating voltage. Power sources will be certified semi-annually. Certification shall include a check of ripple, proper functioning of controls, and accuracy of all meters, counters, and timers which are integral parts of the power source.

4.7 BATH CHARACTERISTICS.

WARNING

Many plating solutions produce toxic mist and vapors, some of which are cumulative in nature. Therefore, precautions should be taken to avoid inhalation of fumes and any contact with skin or clothing.

a. The solution is composed of copper cyanide, sodium stannate, sodium cyanide, sodium hydroxide, and Rochelle salts. Copper cyanide and sodium stannate supply the metal ions. The sodium cyanide improves electrical conductivity, aids in the complexing of the copper, and aids anode solubility. Sodium hydroxide aids in the complexing of tin, regulates the solution pH, and improves electrical conductivity. The Rochelle salts promote anode solubility.

b. The bath operates at a temperature between 63°C (145°F) and 71°C (160°F) and with a current density range from 2.2 – 10.8 A/dm^2 (20 – 100 ASF). Cathode efficiency is about 75%. Desired deposit composition contains 10 – 15% tin and 85 – 90% copper. Changes in buffability, color, ductility, hardness, solderability, and tarnish resistance are realized by variations of the alloy. The alloy composition can be altered by manipulating the metal content, current density, bath temperature, free cyanide, and hydroxide content. Once the correct alloy composition has been determined, the variables must be closely regulated to continue production of desired characteristics. The most important constituents to regulate are cyanide and hydroxide.

c. High hydroxide, low cyanide, low current density, high temperature, and increased agitation favor copper rich deposits. Low temperature, high hydroxide, and low cyanide favor darker deposits while high temperature, high cyanide, and low hydroxide favor lighter deposits.

4.8 TROUBLESHOOTING.

Refer to Chapter 28.

Table 4-1. Bronze Stripping Procedure

Step	Operation	Time	Solutions, Materials, and Current	Temp °C	Temp °F
1	Vapor degrease. **WARNING** Solvent vapors are toxic. Avoid inhalation of vapors or contact with skin or clothing.	As Req'd	ASTM D4081 and ASTM D4376 (Tetrachloroethylene) Alternates:	120 – 124	248 – 256
			ASTM D4080 (Trichloroethylene) **NOTE** Not to be used where prohibited by state regulations.	88 – 90	187 – 194
2	Mask for stripping if necessary.	As Req'd			
3	Strip old plating.	As Req'd	C-101 2 – 6 volts anodic Alternates:	20 – 25	68 – 77
			C-106 Immersion Only	49 – 54	120 – 130
4	Rinse.	As Req'd	Water	Rm – 82	Rm – 180
5	Examine for completeness of strip.	As Req'd			

Table 4-1. Bronze Stripping Procedure - Continued

Step	Operation	Time	Solutions, Materials, and Current	Temp °C	Temp °F
	Repeat Steps 3 through 5 if necessary.				
6	Remove maskant.	As Req'd			
7	Rinse.	As Req'd		49 – 82	120 – 180
8	Dry.	As Req'd	Shop Air	Room	Room
9	Preserve ferrous metal parts with corrosion prevention compound if necessary.	As Req'd	MIL-PRF-16173, Grade 3 Alternates:	Room	Room
			MIL-C-82594	Room	Room
			MIL-PRF-32033	Room	Room

Table 4-2. Bronze Electroplating Procedure

Step	Operation	Time	Solutions, Materials, and Current	Temp °C	Temp °F
1	Stress-relieve all ferrous parts having a hardness of Rockwell C 40 or above which have been machined, ground, cold-formed, or cold-straightened.	3 hrs MIN		191 ± 14	375 ± 25
2	Prepare part for plating.		Table 2-2		
3	Alkaline clean. Current to be OFF when immersing or withdrawing parts.	1 – 3 min	C-201 3 – 6 volts Anodic	52 – 57	125 – 135
			C-203 3 – 6 volts Anodic	52 – 57	125 – 135
			C-204 3 – 6 volts Periodic reverse cycle, 10 sec anodic, 10 sec cathodic. End on anodic cycle.	52 – 57	125 – 135
4	Rinse.	15 – 60 sec	Water	Room	Room
5	Etch.	30 – 60 sec	C-301 Immersion Only	Room	Room
			C-308 21.5 A/dm^2 (200 ASF) Anodic	Room	Room
			C-315 Immersion Only	Room	Room
6	Rinse.	15 – 60 sec	Water	Room	Room
7	Bronze plate.	As Req'd	C-404 2 – 10 A/dm^2 (20 – 100 ASF)	63 – 71	145 – 160
8	Rinse.	15 – 60 sec	Water	Rm – 82	Rm – 180

Table 4-2. Bronze Electroplating Procedure - Continued

Step	Operation	Time	Solutions, Materials, and Current	Temp °C	Temp °F
9	Dry.	As Req'd	Shop Air	Room	Room
10	Remove masking.	As Req'd			
11	Inspect deposit. **NOTE** An acceptable bronze deposit will be smooth, fine-grained, adherent, and free from blisters, pits, nodules, burning, and other defects. Superficial staining is no cause for rejection.	As Req'd			
12	Bake as required. Less than RC 40 RC 40 – RC 43 RC 43 – RC 49 RC 49 or above **NOTE** Embrittlement relief will be initiated within 4 hours after plating.	MIN Times — 3 hrs 8 hrs 23 hrs		191 ± 14	375 ± 25
13	Reinspect deposit.	As Req'd			
14	Preserve ferrous metal parts with corrosion prevention compound.	As Req'd	MIL-PRF-16173, Grade 3 Alternates:	Room	Room
			MIL-C-82594	Room	Room
			MIL-PRF-32033	Room	Room

CHAPTER 5
CADMIUM ELECTRODEPOSITION

5.1 PURPOSE.

This chapter provides instructions for the electrodeposition of cadmium. The resulting coating shall meet or exceed the requirements of Specification SAE AMS-QQ-P-416. Plating on landing gear components will meet the requirements of MIL-STD-870.

5.2 GENERAL.

a. The main purpose of cadmium plating is to protect steel and cast iron against atmospheric corrosion. Cadmium is anodic to ferrous materials and protects the underlying metal from corrosion by sacrificial means. Cadmium is frequently applied to ferrous parts, aluminum parts, and to copper alloys to protect them from dissimilar metal corrosion. Because of its low contact resistance and excellent solderability, it is used extensively in electrical applications.

b. Cadmium offers little resistance to chemical attack and is susceptible to WHITE POWDER corrosion in warm stagnant atmospheres containing organic fumes. Its protective value in outdoor industrial atmospheres is inferior to that of zinc. However, it is superior when exposed to purely marine and alkaline atmospheres or indoor environments.

c. Cadmium plating is much more expensive than zinc plating but it offers two distinct advantages. Cadmium is less apt to cause hydrogen embrittlement and the corrosion products of cadmium are much less voluminous than those of zinc.

WARNING

The corrosion products of cadmium, as well as its fumes, are extremely toxic. Therefore, it shall not be employed as a coating for any object intended for use as a food container, cooking utensil, or for any object likely to be subjected to elevated temperatures.

d. Cadmium electrodeposition is not recommended on steel parts having an ultimate tensile strength greater than 240,000 psi.

5.3 PLATING APPLICATION.

a. Unless otherwise specified, the basis metal shall be free from visible defects that will be detrimental to the appearance or protective value of the plating.

b. The plating shall be applied after all basis metal heat treatments and mechanical operations such as machining, brazing, welding, forming, and perforating of the article have been completed.

5.4 UNDERPLATING.

Unless otherwise specified, cadmium shall be deposited directly on the basis metal without a preliminary plating of other metal. Exceptions are parts of corrosion resistant alloys on which a preliminary coating of nickel is permissible, or parts made of aluminum on which a preliminary treatment such as the zincate process followed by necessary strike coatings is permissible.

5.5 PLATING.

The plating shall be smooth, fine-grained, adherent, uniform in appearance, free from blisters, pits, nodules, burning, and other defects detrimental to the intended use of the article. The plating shall show no indication of contamination or improper operation of equipment used to produce the cadmium deposit, such as excessively powdered or burnt plating. Superficial staining which has resulted from rinsing or baking operation will not be cause for rejection.

5.6 EQUIPMENT.

5.6.1 Tank Construction. Cadmium plating tanks may be constructed of low carbon steel, stainless steel, plastic, or hard rubber. Low carbon steel tanks lined with polyvinyl chloride are recommended to prevent contamination of the solution and elimination of stray currents.

5.6.2 Ventilation. The plating tank shall be equipped with a positive ventilation system capable of meeting or exceeding the ventilation requirements of AFOSHSTD 48-2.

5.6.3 Filtration. Continuous filtration should be provided to the plating solution. Rate of filtration should be sufficient to provide a minimum of two complete turnovers of solution per hour. Filter material may be Dacron, Dynel, polypropylene, or polyvinyl chloride.

5.6.4 Agitation. Mechanical agitation should be provided unless solution turnover from filtration is sufficient to remove gas bubbles from the surface being plated.

Table 5-1. Plating Speed at 100% Cathode Efficiency

Average Thickness in Inches	A/dm² (ASF)							
	1.1 (10)	1.6 (15)	2.2 (20)	2.7 (25)	3.2 (30)	4.3 (40)	5.4 (50)	6.4 (60)
0.0001	5.82	3.88	2.91	2.33	1.94	1.45	1.16	0.97
0.0002	11.64	7.76	5.82	4.66	3.88	2.90	2.32	1.94
0.0003	17.46	11.64	8.73	6.99	5.82	4.35	3.48	2.91
0.0004	23.28	15.52	11.64	9.32	7.76	5.80	4.64	3.88
0.0005	29.10	19.40	14.55	11.65	9.70	7.25	5.80	4.85
0.0006	34.92	23.28	17.46	13.98	11.64	8.70	6.96	5.82
0.0007	40.74	27.16	20.37	16.31	13.58	10.15	8.12	6.79
0.0008	46.56	31.04	23.28	18.64	15.52	11.60	9.28	7.76
0.0009	52.33	34.92	26.19	20.97	17.46	13.05	10.44	8.73
0.0010	58.20	38.80	29.10	23.30	19.40	14.50	11.60	9.70
0.0020	116.40	77.60	58.20	46.60	38.80	29.00	23.20	19.40

5.6.5 Anodes.

a. The anode system usually consists of spherical shaped cadmium metal in a spiral bare steel cylinder or perforated titanium baskets. The cylinder is suspended from a metal bar which is connected to the positive terminal of the power source. The spherical shape provides for a large surface area exposure thus reducing the number of anodes necessary and expense of solution maintenance.

b. Purity of anodes is one of the greatest importance, especially if bright cadmium deposits are desired. Anode composition complying to Specification A-A-51126 will provide the necessary anode purity.

c. If the solution is to remain idle for an extended period, the anodes should be removed from the solution. This reduces decomposition of the anode by galvanic action between the steel baskets and the cadmium anodes.

d. Where complicated part geometry or plating on internal areas is involved, conforming anodes may be necessary.

5.6.6 Power Source. Electrodeposition requires Direct Current (DC) which can be supplied from either generators or rectifiers. Most plating solutions operate between 0 and 14 volts. However, if plating is to be done on large parts at high current densities and with large anode-cathode distances, increased voltage may be necessary. Ripple value, as measured with an oscilloscope connected across the anode and cathode buss at the tank shall not exceed 10%. Power sources will be certified semi-annually.

5.7 BATH CHARACTERISTICS.

WARNING

Many plating solutions produce toxic mist and vapors, some of which are cumulative in nature. Therefore, precautions should be taken to avoid inhalation of fumes and any contact with skin or clothing.

a. The solution is made up of sodium cyanide, sodium hydroxide, cadmium oxide, and sodium carbonate. The sodium cyanide should be added first and to the high limit. The sodium carbonate to the low limit and cadmium oxide to the middle range.

b. Common cathode efficiency is approximately 95%, but may drop lower due to poor bath control. Current densities range from 0.54 – 7.5 A/dm² (5 – 70 ASF); however, the range 1.6 – 2.7 A/dm² (15 – 25 ASF) is recommended. Higher current densities may be attained with high metal content and vigorous agitation.

c. Bath temperatures range from 18° – 35°C (65° – 95°F) but 29° ± 2°C (85° ± 5°F) is preferable.

d. The cadmium metal content can usually be regulated by anode corrosion. If frequent additions of cadmium metal are required, more cadmium anodes should be added to the tank. Metal content can be reduced by substituting low carbon steel for cadmium anodes. When insoluble anodes are used their total area should be 10 – 15% of the total anode area.

e. High carbonate concentrations inhibit plating efficiency. Carbonates may be removed by FREEZING the solution in cold weather and precipitating out the excess carbonate.

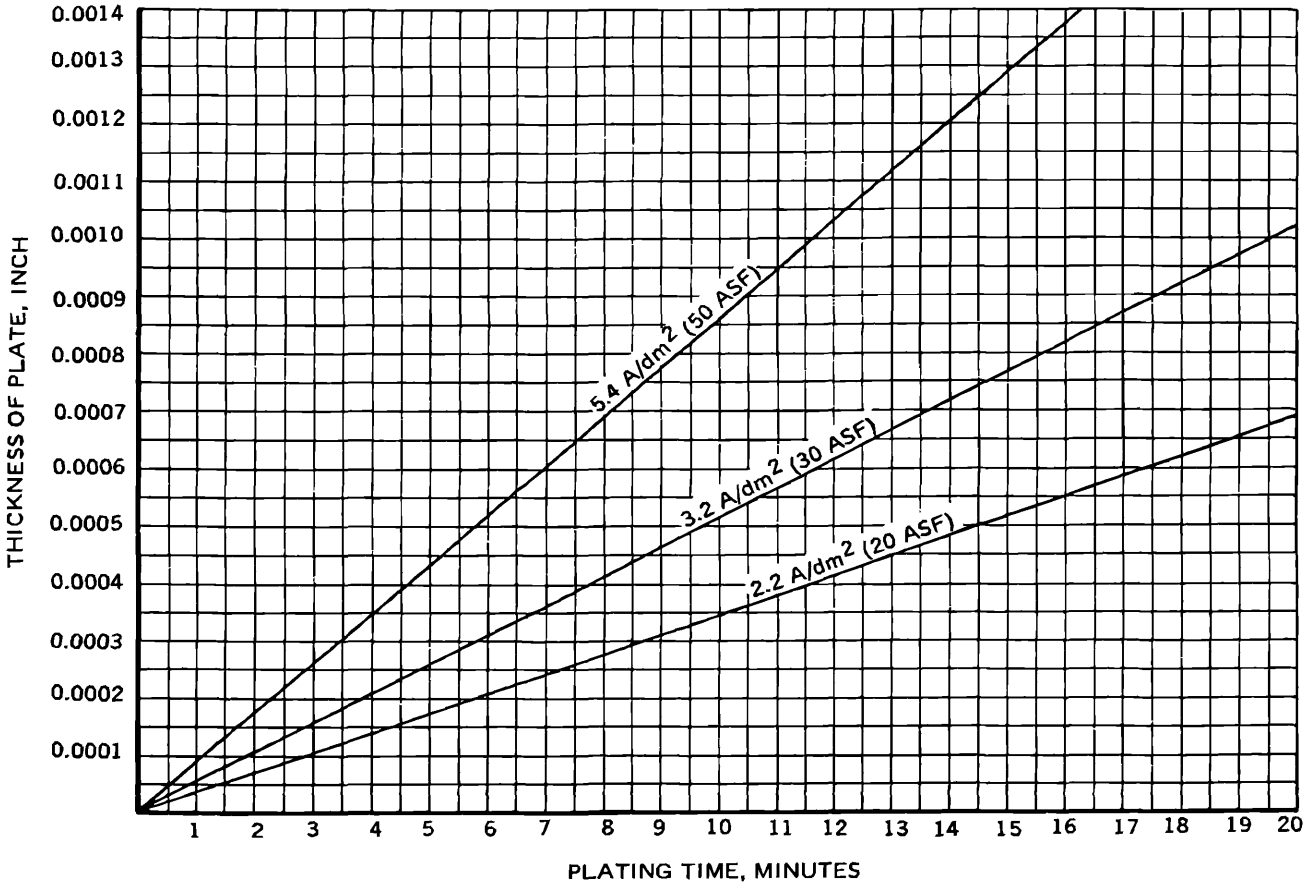

Figure 5-1. Plating Speed at 100% Cathode Efficiency

Table 5-2. Cadmium Stripping Procedure

Step	Operation	Time	Solutions, Materials, and Current	Temp °C	Temp °F
1	Vapor degrease. **WARNING** Solvent vapors are toxic. Avoid inhalation of vapors or contact with skin or clothing.	As Req'd	ASTM D4081 and ASTM D4376 (Tetrachloroethylene) Alternates:	120 – 124	248 – 256
			ASTM D4080 (Trichloroethylene) **NOTE** Not to be used where prohibited by state regulations.	88 – 90	187 – 194
2	Mask for stripping if necessary.	As Req'd			
3	Strip old plating.	As Req'd	From ferrous metal parts C-102 Immersion Only Alternates:	Room	Room
			C-106 Immersion Only	49 – 54	120 – 130
			From brass or copper alloys C-104 Immersion Only	Room	Room
			From aluminum alloys C-120 Immersion Only	Room	Room
4	Rinse.	As Req'd	Water	Rm – 82	Rm – 180
5	Examine for completeness of strip. Repeat Steps 3 through 5 if necessary.	As Req'd			
6	Remove masking.	As Req'd			
7	Rinse.	As Req'd	Water	49 – 82	120 – 180
8	Dry.	As Req'd	Shop Air	Room	Room
9	Preserve ferrous metal parts with corrosion prevention compound if necessary.	As Req'd	MIL-PRF-16173, Grade 3 Alternates:	Room	Room
			MIL-C-82594	Room	Room
			MIL-PRF-32033	Room	Room

Table 5-3. Cadmium Electrodeposition on Ferrous Materials Other Than Landing Gear Components

Step	Operation	Time	Solutions, Materials, and Current	Temp °C	Temp °F
1	Stress relieve all ferrous parts having a hardness of Rockwell C 33 or above which have been machined, ground, cold-formed, or cold-straightened.	3 hrs MIN		191 ± 14	375 ± 25
2	Prepare part for plating.	As Req'd	Table 2-2		
3	Alkaline clean. Current to be OFF when immersing or withdrawing parts.	1 – 3 min	C-201 3 – 6 volts Anodic Alternates:	52 – 57	125 – 135
			C-203 3 – 6 volts Anodic	52 – 57	125 – 135
			C-204 3 – 6 volts Periodic reverse cycle, 10 sec anodic, 10 sec cathodic. End on anodic cycle.	52 – 57	125 – 135
4	Rinse.	15 – 60 sec	Water	Room	Room
5	(LOW ALLOY STEEL PARTS) Etch.	15 – 45 sec	C-302 Immersion Only Alternates:	Room	Room
			C-301 Immersion Only	Room	Room
			C-304 Immersion Only	Room	Room
			C-308 21.5 A/dm^2 (200ASF) Anodic	Room	Room
			C-315 Immersion Only	Room	Room
6	(STAINLESS STEEL PARTS) Etch. If smut is Present after etch operation, repeat Steps 3 through 5 and eliminate current on Step 5.	30 – 90 sec	C-302 Immersion Only Alternates:	Room	Room
			C-304 2 – 6.5A/dm^2 (20 – 60ASF) Cathodic	Room	Room
			C-306 6.5A/dm^2 (60ASF) Anodic	Room	Room
			C-308 21.5 A/dm^2 (200 ASF) Anodic	Room	Room
	Rinse.	15 – 60 sec	Water	Room	Room
	Nickel strike.	4 – 6 min	C-403 3.7 – 7.5 A/dm^2 (35 – 70 ASF)	Room	Room
7	(OPTIONAL STEP) CAUTION: Cyanide Dip.	As Req'd	C-423 Immersion Only	Room	Room

Table 5-3. Cadmium Electrodeposition on Ferrous Materials Other Than Landing Gear Components - Continued

Step	Operation	Time	Solutions, Materials, and Current	Temp °C	Temp °F
8	Rinse.	15 – 60 sec	Water	Room	Room
9	Cadmium plate.	As Req'd	C-405 1.6 – 2.7 A/dm^2 (15 – 25 ASF) **NOTE** For barrel plating, use 10 – 12 volts (barrels 14 x 30 inch or larger) 6 – 8 volts (smaller barrels)	15 – 27	60 – 80
10	Rinse.	15 – 60 sec	Water	Room	Room
11	(OPTIONAL STEP) Bright dip.	20 – 60 sec	C-406 Immersion Only	Room	Room
12	Rinse.	15 – 60 sec	Water	Rm – 82	Rm – 180
13	Dry.	As Req'd	Shop Air	Room	Room
14	Remove masking.	As Req'd			
15	Inspect deposit. **NOTE** An acceptable cadmium deposit shall be smooth, continuous, fine-grained, adherent, and free from blisters, pits, nodules, burning, and other imperfections detrimental to the intended purpose of the coating.	As Req'd			
16	Bake as required. Less than RC 40. RC 40 – RC 43. RC 43 – RC 49. RC 49 and above.	MIN time — 3 hrs 8 hrs 23 hrs		191 ± 14	375 ± 25

Table 5-3. Cadmium Electrodeposition on Ferrous Materials Other Than Landing Gear Components - Continued

Step	Operation	Time	Solutions, Materials, and Current	Temp °C	Temp °F
	NOTE • Embrittlement relief will be initiated within 4 hours after plating. • If multiple plating is required, intermediate bakes of 4 hours may be done with the 23 hours bake after the final plating application.				
17	Reinspect deposit.	As Req'd			
18	(TYPE II TREATMENT) Chromate treatment.	15 – 30 sec	C-435 Immersion Only	Room	Room
19	(TYPE III TREATMENT) Phosphate treatment.	15 – 30 sec	C-436 Immersion Only	Room	Room
20	Rinse.	15 – 60 sec	Water	Rm – 82	Rm – 180
21	Dry.	As Req'd	Shop Air	Room	Room
22	Preserve with corrosion prevention compound if necessary.	As Req'd	MIL-PRF-16173, Grade 3 Alternates:	Room	Room
			MIL-C-82594	Room	Room
			MIL-PRF-32033	Room	Room

Table 5-4. Cadmium Electrodeposition on High Strength Steels (above 180,000 psi) Other Than Landing Gear Components

Step	Operation	Time	Solutions, Materials, and Current	Temp °C	Temp °F
1	Stress relieve all parts.	4 hrs MIN		191 ± 14	375 ± 25
2	Shot-peen parts, if required.	As Req'd			
3	Prepare part for plating.	As Req'd	Table 2-2		
4	Alkaline clean. Current to be OFF when immersing or withdrawing parts.	1 – 3 min	C-201 Anodic only 3 – 6 volts Alternates:	52 – 57	125 – 135

Table 5-4. Cadmium Electrodeposition on High Strength Steels (above 180,000 psi) Other Than Landing Gear Components - Continued

Step	Operation	Time	Solutions, Materials, and Current	Temp °C	Temp °F
			C-203 Anodic on1y 3 – 6 volts	52 – 57	125 – 135
			C-204 Anodic only 3 – 6 volts	52 – 57	125 – 135
5	Rinse.	15 – 60 sec	Water	Room	Room
6	Etch.	15 – 30 sec	C-301 Immersion Only	Room	Room
7	Rinse.	15 – 60 sec	Water	Room	Room
8	(OPTIONAL STEP) Caution Cyanide Dip.	As Req'd	C-423 Immersion Only	Room	Room
9	Cadmium plate. Allow part to remain in solution approximately 5 minutes before application of current. Solution shall be moderately agitated during precurrent application time.	As Req'd	C-405 Apply 8.64 A/dm^2 (80ASF) current for 1 minute, then lower current to desired current density.	15 – 27	60 – 80
10	Rinse.	As Req'd	Water	49 – 82	120 – 180
11	Dry.	As Req'd	Shop Air	Room	Room
12	Inspect deposit. **NOTE** An acceptable cadmium deposit shall be smooth, continuous, homogeneous, adherent, and free from blisters, pits, nodules, and other indications of harmful defects. The appearance may vary from a dull gray to frosty white. A bright, shiny, dense deposit is not acceptable.	As Req'd			
13	Bake all parts.	23 hrs MIN		191 ± 14	375 ± 25
14	Reinspect deposit.	As Req'd			
15	(TYPE II TREATMENT) Chromate treatment.	15 – 30 sec	C-435 Immersion Only	Room	Room
16	(TYPE III TREATMENT) Phosphate treatment.	15 – 30 sec	C-436 Immersion Only	Room	Room

Table 5-4. Cadmium Electrodeposition on High Strength Steels (above 180,000 psi) Other Than Landing Gear Components - Continued

Step	Operation	Time	Solutions, Materials, and Current	Temp °C	Temp °F
17	Rinse.	15 – 60 sec	Water	Rm – 82	Rm – 180
18	Preserve with corrosion prevention compound if necessary.	As Req'd	MIL-PRF-16173, Grade 3 Alternates:	Room	Room
			MIL-C-82594	Room	Room
			MIL-PRF-32033	Room	Room

Table 5-5. Cadmium Electrodeposition on High Strength Steel (over 180,000 psi) Landing Gear Components. Plating on Landing Gear Components Will Meet Requirements of MIL-STD-870

Step	Operation	Time	Solutions, Materials, and Current	Temp °C	Temp °F
1	Stress relieve all parts.	4 hrs MIN		191 ± 14	375 ± 25
2	Shot-peen parts if required.	As Req'd			
3	Vapor degrease. **WARNING** Solvent vapors are toxic. Avoid inhalation of vapors or contact with skin or clothing.	As Req'd	ASTM D4081 and ASTM D4376 (Tetrachloroethylene) Alternates:	120 – 124	248 – 256
			ASTM D4080 (Trichloroethylene) **NOTE** Not to be used where prohibited by state regulations.	88 – 90	187 – 194
4	Mask parts as required for plating.	As Req'd	Table 2-2		
5	Clean area to be plated. **NOTE** Maximum time before Step 6 is 1 hour.	As Req'd	CP-2 Use 80 – 220 grit aluminum oxide, or garnet, or silicon dioxide.		
6	Rinse. **NOTE** Maximum time before Step 7 is 1 minute.	1 min MAX	Water	Room	Room
7	(OPTIONAL STEP) CAUTION: Cyanide Dip.	As Req'd	C-423 Immersion Only	Room	Room

Table 5-5. Cadmium Electrodeposition on High Strength Steel (over 180,000 psi) Landing Gear Components. Plating on Landing Gear Components Will Meet Requirements of MIL-STD-870 - Continued

Step	Operation	Time	Solutions, Materials, and Current	Temp °C	Temp °F
8	Cadmium plate. Current to be ON when immersing part.	As Req'd	C-405 4.3 – 7.5A/dm^2 (50 – 80 ASF)	15 – 27	60 – 80
9	Rinse.	As Req'd	Water	49 – 82	120 – 180
10	Dry.	As Req'd	Shop Air	Room	Room
11	Inspect deposit. **NOTE** An acceptable cadmium deposit shall be smooth, continuous, homogeneous, adherent, and free from blisters, pits, nodules, and other indications of harmful defects. The appearance may vary from a dull gray to frosty white. A bright, shiny, dense deposit is not acceptable.	As Req'd			
12	Bake all parts. **NOTE** Embrittlement relief will be initiated within 4 hours of plating.	23 hrs MIN		191 ± 14	375 ± 25
13	Reinspect deposit.	As Req'd			
14	(TYPE II TREATMENT) Chromate treatment.	15 – 30 sec	C-435 Immersion Only	Room	Room
15	(TYPE III TREATMENT) Phosphate treatment.	15 – 30 sec	C-436 Immersion Only	Room	Room
16	Rinse.	15 – 60 sec	Water	Rm – 82	Rm – 180
17	Preserve with corrosion prevention if necessary.	As Req'd	MIL-PRF-16173, Grade 3 Alternates:	Room	Room
			MIL-C-82594	Room	Room
			MIL-PRF-32033	Room	Room

Table 5-6. Cadmium Electrodeposition on Copper and Copper Base Alloys

Step	Operation	Time	Solutions, Materials, and Current	Temp °C	Temp °F
1	Prepare for plating.	As Req'd	Table 2-2	As Req'd	As Req'd
2	Alkaline clean.	1 – 3 min	C-201 3 – 5 volts Cathodic	52 – 57	125 – 135
3	Rinse.	15 – 60 sec	Water	Room	Room
4	Acid dip.	15 – 30 sec	C-302 Immersion Only Alternates:	Room	Room
			C-301 Immersion Only	Room	Room
			C-302 Immersion Only	Room	Room
5	Rinse.	15 – 60 sec	Water	Room	Room
6	Cyanide dip.	15 – 30 sec	C-423 Immersion Only	Room	Room
7	Rinse.	15 – 60 sec	Water	Room	Room
8	Cadmium plate.	As Req'd	C-405 1.6 – 2.7 A/dm^2 (15 – 25 ASF)	Room	Room
9	Rinse.	15 – 60 sec	Water	Room	Room
10	(OPTIONAL STEP) Bright dip.	20 – 60 sec	C-406 Immersion Only	Room	Room
11	Rinse.	15 – 60 sec	Water	Room	Room
12	Dry.	As Req'd	Shop Air	Room	Room
13	Inspect deposit. **NOTE** An acceptable cadmium deposit shall be smooth, continuous, fine-grained, adherent, and free from blisters, pits, nodules, burning, and other imperfections detrimental to the intended purpose of the coating.	As Req'd			

CHAPTER 6
CHROMIUM ELECTRODEPOSITION

6.1 PURPOSE.

This chapter provides instructions for the electrodeposition of chromium. The resulting coating shall meet or exceed the requirements of Specification SAE AMS-QQ-C-320.

6.2 GENERAL.

a. Chromium is a hard, attractive bluish-white durable metal which is resistant to abrasion, heat, tarnishing, staining, wear, and when underplated with nickel or copper nickel, resistant to atmospheric corrosion. It has good reflective properties, a low coefficient of friction, good anti-galling properties, and the ability to maintain its luster in service. Chromium has many usages which fall into two general categories (1) Decorative, and (2) Industrial (Engineering application).

b. Its main decorative applications are for protection of basic metals against corrosion and for cosmetic purposes (the agreed on standard).

c. Its main industrial applications are for parts salvage, wear resistance applications, and the improvement of tool performance and tool life.

d. When used for engineering applications, chromium should never be used against itself as fretting or galling may result.

6.3 PLATING APPLICATION.

a. Unless otherwise specified, the plating shall be applied after all basis metal heat treatments and mechanical operations, such as machining, brazing, welding, forming, and perforating of the article, have been completed.

b. The basis metal shall be free from visible defects that will be detrimental to the appearance or protective value of the plating.

6.4 UNDERPLATING.

a. Unless otherwise specified, chromium shall be deposited directly on the basis metal without a preliminary plating of other metal except (1) in the case of aluminum parts on which a preliminary zincate process followed by necessary strike coatings is permissible, or (2) where the coating is used for corrosion protection in which a preliminary coating of nickel or copper followed by nickel is permissible. In no case shall any underplate be substituted for any part of the specified chromium thickness.

b. Plating chromium over chromium is an accepted practice if the underlying layer of chromium has not been in service, i.e.; the part was removed prematurely from the plating solution or a current interruption was experienced during the plating operation. See Table 6-7 for instructions.

6.5 PLATING.

The plating shall be smooth, fine-grained, adherent, uniform in appearance, free from blisters, pits, nodules, excessive edge build-up, frosty areas, and other defects. The plating shall show no indication of contamination or improper operation of equipment used to produce the deposit, such as excessively powdered or darkened plating, build-up, and other defects. The size and number of contact marks shall be at a minimum consistent with good practice. The location of contact marks shall be in areas of minimum exposure to service environmental conditions where important to the function of the part. Superficial staining which has been demonstrated as resulting from rinsing or slight discoloration resulting from baking operations to relieve embrittlement, shall not be cause for rejection. All details of workmanship shall conform to the best practice for high quality plating.

6.6 EQUIPMENT.

6.6.1 Tank Construction.

a. Chromium plating tanks are usually made of steel and are lined with lead, brick, or plastic. Antimonial lead is widely used because of its resistance to chromic acid corrosion but is rather expensive and difficult to apply.

b. Acid proof brick is used because of its electrical insulating characteristics of reducing possible current losses or stray currents, but is also expensive and difficult to install.

c. Plastic linings (polyvinyl chloride) provide a nonconductive covering, are acid resistant, easy to apply, and less expensive than either lead or brick.

6.6.2 Ventilation. The plating tank shall be equipped with a positive ventilation system capable of meeting or exceeding the ventilation requirements of AFOSHSTD 48-2.

6.6.3 Filtration. Periodic filtration should be provided to the plating solution. Rate of filtration should be sufficient to provide one complete solution turnover per hour. Filter material may be Dynel, polypropylene, or Teflon.

6.6.4 Agitation. Mechanical agitation or low pressure filtered air shall be provided unless solution turnover from filtration is sufficient to eliminate gas bubbles from surface being plated and to eliminate stratification of solution.

6.6.5 Anodes. The anode system consists of round, corrugated, flat, ribbed, ridged, or multiedged anodes suspended in bays or of auxiliary conforming anode connected to the positive terminal of the power supply. The round anode is generally preferred because it is active on its entire surface and is thus able to carry higher amperages. The absence of inactive areas also minimizes the formation of lead chromate film which tends to decrease anode efficiency. For proper functioning of the anode, it must be properly positioned in relation to the work and have a continuous and uniform film of lead peroxide on the entire surface. The function of the anode is not only to conduct current but to oxidize trivalent chromium back to hexavalent chromium. An anode to cathode area ratio of 2 to 1 will effectively reoxidize and balance the concentration of trivalent chromium near the optimum operating limits. Insoluble antimonial-lead (92 – 94% Pb, 6 – 8% Sb) and lead-tin (93% Pb, 7% Sn) are used for anodes. Chemical lead anodes are not general1y used due to heavy sludge formations of lead chromate produced and loss of shape due to heat build-up during the plating operation. Anodes left in the plating solutions lose their effectiveness because of lead chromate build-ups on the surface of inactive anodes. Therefore, the anodes should be periodically removed from the tank and cleaned in a solution of 1 lb sodium hydroxide and 1 lb Rochelle salts or 2 lbs A-A-59260 per gallon of solution operated at room temperature.

6.6.6 Power Source. Electrodeposition requires Direct Current (DC) which can be supplied from either generators or rectifiers. Most plating solutions operate between 0 and 14 volts. However, if plating is to be done on large parts at high current densities and with large anode-cathode distances, increased voltage may be necessary. Ripple value as measured with a true RMS voltmeter connected across the anode and cathode buss at the tank shall not exceed 10% of the DC operating voltage. Power sources will be certified semi-annually. Certification shall include a check of ripple, proper functioning of controls, and accuracy of all meters, counters, and timers which are integral parts of the power source.

6.7 BATH CHARACTERISTICS.

WARNING

Many plating solutions produce toxic mist and vapors, some of which are cumulative in nature. Therefore, precautions should be taken to avoid inhalation of fumes and any contact with skin or clothing.

a. The conventional chromium plating solutions are composed of chromic acid and sulfuric acid in the ratio of (85 – 115):1 and are made up of concentrations ranging from 23 to 53 oz/gal of solution. They are very stable in use and can be easily controlled by chemical analysis. This solution has a low current efficiency and low throwing power which makes it necessary to use auxiliary conforming anodes to cover parts with difficult configuration. Low concentration baths possess the fastest plating rate but high concentration baths are less sensitive to concentration change, easier to control, have better throwing power, and a higher electrical conductance.

b. There are Self-Regulating High Speed (SRHS) baths available which contain mixed and coordinating catalyst acid radicals controlled by virtue of the solubility of the chemicals used. The SRHS bath offers slightly higher current efficiency, wider plating range, better throwing power, and brighter and slightly harder deposits but have been found difficult to analyze and control. Etching of the parts basis metal and anode corrosion is common.

c. During plating operations, some of the chromic acid is reduced to trivalent chromium but it is being reoxidized to hexavalent chromium on the lead dioxide surface of the anode. When anode to cathode ratio is correct, there is a satisfactory equilibrium within the solution to maintain the concentration of trivalent chromium within the 1 oz/gal maximum range.

d. Anodes other than antimonial-lead or lead-tin should not be used for they introduce contaminating metals into the solution which necessitates solution disposal.

e. Common cathode efficiency ranges between 5 and 35%. This efficiency can be changed by the alteration of temperature, solution metal concentration, and the utilization of auxiliary conforming anodes. Alteration of bath variables also change the plated metallic characteristics. The desired characteristics for parts salvage are obtained at a temperature between 52° – 57°C (125° – 135°F) utilizing a current density of 0.2 – 0.54 A/dm^2 (1.5 – 5 ASF).

Table 6-1. Plating Speed at 14% Cathode Efficiency

Average Thickness in Inches	A/dm²								
	24.2 (225)	26.9 (250)	29.6 (275)	32.3 (300)	35.0 (325)	37.7 (350)	40.4 (375)	4.00 (400)	45.7 (425)
0.00001	1.0	0.9	0.8	0.7	0.7	0.6	0.6	0.6	0.5
0.00002	2.0	1.8	1.6	1.5	1.4	1.3	1.2	1.1	1.0
0.00003	3.0	2.7	2.4	2.2	2.0	1.9	1.8	1.7	1.6
0.00004	3.9	3.6	3.2	3.0	2.7	2.5	2.4	2.2	2.1
0.00005	4.9	4.4	4.0	3.7	3.4	3.2	3.0	2.8	2.6
0.00006	5.9	5.3	4.8	4.4	4.1	3.8	3.6	3.3	3.1
0.00007	6.9	6.2	5.7	5.2	4.8	4.4	4.1	3.9	3.7
0.00008	7.9	7.1	6.5	5.9	5.5	5.1	4.7	4.4	4.2
0.00009	8.9	8.0	7.3	6.7	6.1	5.7	5.3	5.0	4.7
0.0001	9.9	8.9	8.1	7.4	6.8	6.3	5.9	5.6	5.2
0.0002	19.7	17.8	16.1	14.8	13.7	12.7	11.8	11.1	10.4
0.0003	29.6	26.6	24.2	22.2	20.5	19.0	17.8	16.7	15.7
0.0004	39.5	35.5	32.3	29.6	27.3	25.4	23.7	22.2	20.9
0.0005	49.3	44.4	40.4	37.0	34.2	31.7	29.6	27.8	26.1
0.0006	59.2	53.3	48.4	44.4	41.0	38.1	35.5	33.3	31.3
0.0007	69.1	62.2	56.5	51.8	47.8	44.4	41.4	38.9	36.6
0.0008	78.9	71.0	64.6	59.2	54.6	50.7	47.4	44.4	41.8
0.0009	88.8	79.9	72.7	66.6	61.5	57.1	53.3	50.0	47.0
0.001	98.7	88.8	80.7	74.0	68.3	63.4	59.2	55.5	52.2
0.002	197.3	177.6	161.5	148.0	136.6	126.9	118.4	111.0	104.5
0.003	296.0	266.4	242.2	222.0	204.9	190.3	177.6	166.5	156.7
0.004	394.7	355.2	322.9	296.0	273.2	253.7	236.8	222.0	208.9
0.005	493.3	444.0	403.6	370.0	341.5	317.1	296.0	277.5	261.2
0.006	592.0	532.8	484.0	444.0	409.8	380.6	355.2	333.0	313.4
0.007	690.7	621.6	565.1	518.0	478.2	444.0	414.4	388.5	365.6
0.008	789.3	710.4	645.8	592.0	546.5	507.4	473.6	444.0	417.9
0.009	888.0	799.2	726.5	666.0	614.8	570.9	532.8	499.5	470.1
0.010	986.7	888.0	807.3	740.0	683.1	634.3	592.0	555.0	522.4
0.011	108.5	976.8	888.0	814.0	751.4	697.7	651.2	610.5	574.6
	Time in Minutes								

Table 6-2. Chromium Stripping Procedure

Step	Operation	Time	Solutions, Materials, and Current	Temp °C	Temp °F
1	Vapor degrease. **WARNING** Solvent vapors are toxic. Avoid inhalation of vapors or contact with skin or clothing.	As Req'd	ASTM D4081 and ASTM D4376 (Tetrachloroethylene) Alternates:	120 – 124	248 – 256
			ASTM D4080 (Trichloroethylene) **NOTE** Not to be used where prohibited by state regulations.	88 – 90	187 – 194
2	Mask for stripping if necessary.	As Req'd			
3	Strip old plating.	As Req'd	From steel parts C-103 6 volts Anodic Alternates:	49 – 54	120 – 130
			C-110 6 volts Anodic	Room	Room
			From Stainless Steel C-104 Immersion Only Alternates:	Room	Room
			C-103 6 volts Anodic	49 – 54	120 – 130
			C-110 6 volts Anodic	Room	Room
			From Aluminum Alloys C-105 7.5 A/dm^2 (70 ASF) Anodic	Room	Room
			C-118 2 volts Anodic	21 – 27	70 – 80
			C-140 6 volts Anodic	Room	Room
			From copper, brass, or nickel C-114 Immersion Only	Room	Room
4	Rinse.	As Req'd	Water	Rm – 82	Rm – 180
5	Examine for completeness of strip. Repeat Steps 3 through 5 if necessary.	As Req'd			
6	Remove masking.	As Req'd			
7	Rinse.	As Req'd	Water	49 – 82	120 – 180
8	Dry.	As Req'd	Shop Air		
9	Bake to relieve embrittlement if solution C-104 was utilized to remove chromium.	3 hrs MIN		191 ± 14	375 ± 25

Table 6-2. Chromium Stripping Procedure - Continued

Step	Operation	Time	Solutions, Materials, and Current	Temp °C	Temp °F
10	Preserve ferrous metal parts with corrosion prevention compound if necessary.	As Req'd	MIL-PRF-16173, Grade 3 Alternates:	Room	Room
			MIL-C-82594	Room	Room
			MIL-PRF-32033	Room	Room

Table 6-3. Chromium Electrodeposition on Aluminum Alloys

Step	Operation	Time	Solutions, Materials, and Current	Temp °C	Temp °F
1	Strip anodize coating if necessary.	As Req'd	C-116 Immersion Only Alternates:	71 – 82	160 – 180
			C-137 Immersion Only	82 – 100	180 – 212
2	Prepare part for plating.	As Req'd	Table 2-2		
3	Alkaline clean.	1 – 2 min	C-202 Immersion Only Alternates:	52 – 57	125 – 135
			C-205 Immersion Only	52 – 57	125 – 135
4	Rinse.	30 – 60 sec	Water	Room	Room
5	Etch.	10 – 30 sec	C-311 Immersion Only	Room	Room
6	Rinse.	30 – 60 sec	Water	Room	Room
7	Etch.	10 – 30 sec	C-316 Immersion Only Alternates:	Room	Room
			C-304 Immersion Only	Room	Room
8	Rinse. Use vigorous agitation.	30 – 60 sec	Water	Room	Room
9	Zincate. Use vigorous agitation.	30 sec	C-410 Immersion Only	21 – 24	70 – 75
10	Remove Zincate.	5 – 20 sec	C-311 Immersion Only Alternates:	Room	Room
			C-310 Immersion Only	Room	Room
11	Rinse. Use vigorous agitation.	30 – 60 sec	Water	Room	Room

Table 6-3. Chromium Electrodeposition on Aluminum Alloys - Continued

Step	Operation	Time	Solutions, Materials, and Current	Temp °C	Temp °F
12	Etch.	10 – 30 sec	C-316 Immersion Only Alternates:	Room	Room
			C-304 Immersion Only	Room	Room
13	Rinse. Use vigorous agitation.	30 – 60 sec	Water	Room	Room
14	Zincate. Use vigorous agitation.	30 – 60 sec	C-410 Immersion Only	Room	Room
15	Rinse. Use vigorous agitation.	30 – 60 sec	Water	Room	Room
16	(OPTIONAL STEP) Copper strike. Current to be ON when immersing or withdrawing part.	4 – 7 min	C-472 Use 2.6 A/dm^2 (24 ASF) for 2 minutes, then reduce to 1.3 A/dm^2 (12 ASF) for remainder of strike time.	38 – 54	100 – 130
17	Rinse.	30 – 60 sec	Water	Room	Room
18	(OPTIONAL STEP) Nickel strike. Current to be ON when immersing or withdrawing part.	10 – 12 min	C-412 3.2 A/dm^2 (30 ASF) Alternates:	46 – 54	115 – 130
			C-430 Immersion Only	77 – 88	170 – 190
19	Rinse.	15 – 60 sec	Water	Room	Room
20	Chromium plate. Current to be ON when immersing part.	As Req'd	C-407 23.3 – 46.5 A/dm^2 (216 – 432 ASF) Alternates:	52 – 57	125 – 135
			C-408 23.3 – 46.5 A/dm^2 (216 – 432 ASF)	52 – 57	125 – 135
			C-409 23.3 – 46.5 A/dm^2 (216 – 432 ASF)	52 – 57	125 – 135
21	Rinse.	15 – 300 sec	Water	Rm – 82	Rm – 180
22	Dry.	As Req'd	Shop Air	Room	Room
23	Remove masking.	As Req'd			

Table 6-3. Chromium Electrodeposition on Aluminum Alloys - Continued

Step	Operation	Time	Solutions, Materials, and Current	Temp °C	Temp °F
24	Inspect deposit. **NOTE** An acceptable chromium deposit shall be smooth, fine-grained, adherent, and free from blisters, pits, nodules, and indications of burning. Superficial staining resulting from rinsing operations is no cause for rejections.	As Req'd			
25	Bake as required by instruction on specific part.				

Table 6-4. Chromium Electrodeposition on Steel Parts Other Than Landing Gear Components

Step	Operation	Time	Solutions, Materials, and Current	Temp °C	Temp °F
1	Stress relieve all parts having a hardness of Rockwell C 33 (150,000 psi) or above, which have been machined, ground, cold-formed, or cold-straight-ened.	3 hrs MIN		191 ± 14	375 ± 25
2	Shot-peen all parts which are designed for unlimited life under dynamic loads.	As Req'd			
3	Prepare part for plating.	As Req'd	Table 2-2		
4	Alkaline clean. Current to be OFF when immersing or withdrawing part.	1 – 3 min	C-201 3 – 6 volts Anodic Alternates:	52 – 57	125 – 135
			C-203 3 – 6 volts Anodic	52 – 57	125 – 135
			C-204 3 – 6 volts Periodic reverse cycle, 10 sec anodic, 10 sec cathodic. End on anodic cycle. Alternates:	52 – 57	125 – 135
	Abrasive blast clean.	As Req'd	CP-1, Paragraph 2.6 Alternates:		
			CP-2, CP-3, or CP-4		

Table 6-4. Chromium Electrodeposition on Steel Parts Other Than Landing Gear Components - Continued

Step	Operation	Time	Solutions, Materials, and Current	Temp °C	Temp °F
5	Rinse.	15 – 60 sec	Water	Room	Room
6	Etch.	1 – 3 min	C-305 7.5 A/dm^2 (70 ASF) Anodic Alternates:	52 – 57	125 – 135
			7.5 A/dm^2 (70 ASF) C-407 C-408 Anodic C-409	52 – 57	125 – 135
7	Rinse part.	15 – 60 sec	Water	Room	Room
8	Chromium plate.	As Req'd	C-407 23.3 – 77.5 A/dm^2 (216 – 720 ASF) **NOTE** • Immerse part in plating solution and bring it to temperature of solution. • Apply 1/3 total current for 5 minutes, then raise to 2/3 total current for 5 minutes. Finally apply full current. • This is a recommended procedure and may be altered for unique items. Alternates:	52 – 57	25 – 135
			C-408 Same conditions as C-407	52 – 57	125 – 135
			C-409 Same conditions as C-407	52 – 57	125 – 135
9	Rinse.	15 – 300 sec	Water	Rm – 82	Rm – 180
10	Dry.	As Req'd	Shop Air	Room	Room
11	Remove masking.	As Req'd			

Table 6-4. Chromium Electrodeposition on Steel Parts Other Than Landing Gear Components - Continued

Step	Operation	Time	Solutions, Materials, and Current	Temp °C	Temp °F
12	Inspect deposit. **NOTE** • An acceptable chromium deposit shall be smooth, fine-grained, adherent, and free from frosty areas, pinholes, nodules, blisters, and other imperfections detrimental to performance of part. Superficial stains are not cause for rejection. • Pinholes and other imperfections which can be shown to be the result of failure of the deposit to bridge or fill imperfections in the surface of the basis metal will not be cause for rejection.	As Req'd			
13	Bake as required. Less than RC 40. RC 40 – RC 43. RC 43 – RC 49. RC 49 and above. **NOTE** • Embrittlement relief will be initiated within 4 hours after plating. • If multiple plating is required, intermediate bakes of 4 hours may be done with the 23 hours bake after the final plating application.	MIN Times — 3 hrs 8 hrs 23 hrs		191 ± 14	375 ± 25
14	Any grinding of chrome plated steel parts, RC 38 or higher, shall be in accordance with MIL-STD-866.				

Table 6-4. Chromium Electrodeposition on Steel Parts Other Than Landing Gear Components - Continued

Step	Operation	Time	Solutions, Materials, and Current	Temp °C	Temp °F
15	Reinspect deposit.	As Req'd			
16	Preserve with corrosion prevention compound.	As Req'd	MIL-PRF-16173, Grade 3 Alternates:	Room	Room
			MIL-C-82594	Room	Room
			MIL-PRF-32033	Room	Room

Table 6-5. Chromium Electrodeposition on Stainless Steel and Nickel and Cobalt Base Alloys

Step	Operation	Time	Solutions, Materials, and Current	Temp °C	Temp °F
1	Stress relieve all parts having a hardness of Rockwell C 33 or above which have been machined, ground, cold-formed, or cold-straightened.	3 hrs MIN		191 ± 14	375 ± 25
2	Shot-peen all parts which are designed for unlimited life under dynamic loads in accordance with SAE AMS-S-13165.	As Req'd			
3	Prepare part for plating.	As Req'd	Table 2-2		
4	Alkaline clean. Current to be OFF when immersing or withdrawing parts. **NOTE** Alkaline cleaning is optional for parts which have been precleaned by abrasive blast cleaning per Chapter 2.	1 – 3 min	C-201 3 – 6 volts Anodic Alternates:	52 – 57	125 – 135
			C-203 3 – 6 volts Anodic	52 – 57	125 – 135
			C-204 3 – 6 volts Periodic reverse cycle, 10 sec anodic, 10 sec cathodic. End on anodic cycle.	52 – 57	125 – 135
5	Rinse.	15 – 60 sec	Water	Room	Room
6	(STAINLESS STEEL PARTS)	15 – 60 sec	C-306 10.5 A/dm^2 (100 ASF) Anodic	Room	Room

Table 6-5. Chromium Electrodeposition on Stainless Steel and Nickel and Cobalt Base Alloys - Continued

Step	Operation	Time	Solutions, Materials, and Current	Temp °C	Temp °F
	Etch.		Alternates:		
			C-304 10.5 A/dm^2 (100 ASF) Anodic	Room	Room
			C-309 21.5 A/dm^2 (200 ASF) Anodic	Room	Room
			C-326 10.5A/dm^2 (100 ASF) Anodic	Room	Room
7	(NICKEL AND COBALT BASE ALLOYS) Etch.	15 – 60 sec	C-307 Immersion Only Alternates:	Room	Room
			C-306 10.5 A/dm^2 (100 ASF) Anodic	Room	Room
			C-308 21 A/dm^2 (200 ASF) Anodic	Room	Room
			C-326 10.5 A/dm^2 (100 ASF) Anodic	Room	Room
8	Rinse. **NOTE** Do not allow parts to dry before immersion in plating solution.	15 – 60 sec	Water	Room	Room
9	Chromium plate. Current to be ON when immersing part.	As Req'd	C-407 23.3 – 77.5 A/dm^2 (216 – 720 ASF) Alternates:	52 – 57	125 – 135
			C-408 23.3 – 77.5 A/dm^2 (216 – 720 ASF)	52 – 57	125 – 135
			C-409 23.3 – 77.5 A/dm^2 (216 – 720 ASF)	52 – 57	125 – 135
			NOTE Apply total current to part immediately after immersion in plating solution.		
10	Rinse.	15 – 300 sec	Water	Rm – 82	Rm – 180
11	Dry.	As Req'd	Shop Air	Room	Room
12	Removing masking.	As Req'd			

Table 6-5. Chromium Electrodeposition on Stainless Steel and Nickel and Cobalt Base Alloys - Continued

Step	Operation	Time	Solutions, Materials, and Current	Temp °C	Temp °F
13	Inspect deposit. **NOTE** • An acceptable chromium deposit shall be smooth, fine-grained, adherent, and free from pits, nodules, blisters, frosty areas, and other imperfections detrimental to the performance of the part. Superficial staining is not cause for rejection. • Pinholes and other imperfections which can be shown to be the result of failure of the deposit to bridge or fill imperfections in the surface of the basis metal will not be cause for rejection.	As Req'd			
14	Bake as required. Less than RC 40. RC 40 – RC 43. RC 43 – RC 49. RC 49 and above. **NOTE** Embrittlement relief will be initiated within 4 hours after plating. If multiple plating is required, intermediate bakes of 4 hours may be done with the 23 hours bake after the final plating application.	MIN Times — 3 hrs 8 hrs 23 hrs		191 ± 14	375 ± 25
15	Any grinding of chrome plated stainless steel parts, RC 38 or higher, shall be in accordance with MIL-STD-866.				
16	Reinspect deposit.	As Req'd			

Table 6-5. Chromium Electrodeposition on Stainless Steel and Nickel and Cobalt Base Alloys - Continued

Step	Operation	Time	Solutions, Materials, and Current	Temp °C	Temp °F
17	Preserve with corrosion prevention compound if necessary.	As Req'd	MIL-PRF-16173, Grade 3 Alternates:	Room	Room
			MIL-C-82594	Room	Room
			MIL-PRF-32033	Room	Room

Table 6-6. Chromium Electrodeposition on High Strength Steel Landing Gear Components Chromium Plating on Landing Gear Components Shall Meet the Requirements of MIL-STD-1501

Step	Operation	Time	Solutions, Materials, and Current	Temp °C	Temp °F
1	Stress relieve all parts.	4 hrs MIN		191 ± 14	375 ± 25
2	Unless otherwise specified, shot-peen all parts in accordance with SAE AMS-S-13165.	As Req'd			
3	Prepare part for plating.	As Req'd	Table 2-2		
4	Vapor degrease. **WARNING** Solvent vapors are toxic. Avoid inhalation of vapors or contact with skin or clothing.	As Req'd	ASTM D4081 and ASTM D4376 (Tetrachloroethylene) Alternates:	120 – 124	248 – 256
			ASTM D4080 (Trichloroethylene) **NOTE** Not to be used where prohibited by state regulations.	88 – 90	187 – 194
5	Clean area to be plated.	As Req'd	CP-2 Use 80 – 220 grit aluminum oxide, silicon dioxide, or garnet. Alternates: CP-4 wet glass bead blasting		
6	Etch.	1/2 – 1 min	C-305 15 – 47 A/dm^2 (144 – 432 ASF) Alternates:	52 – 57	125 – 135
			C-407 15 – 47 A/dm^2 (144 – 432 ASF)	52 – 57	125 – 135
7	Chromium plate.	As Req'd	C-407 15 – 47 A/dm^2 (144 – 432 ASF)	52 – 57	125 – 135

Table 6-6. Chromium Electrodeposition on High Strength Steel Landing Gear Components Chromium Plating on Landing Gear Components Shall Meet the Requirements of MIL-STD-1501 - Continued

Step	Operation	Time	Solutions, Materials, and Current	Temp °C	Temp °F
	Current to be ON when immersing part.		**NOTE** Apply total current to part immediately after immersion in plating solution.		
8	Rinse.	15 – 300 sec	Water	Rm – 82	Rm – 180
9	Dry.	As Req'd	Shop Air	Room	Room
10	Remove masking.	As Req'd			
11	Inspect deposit. **NOTE** An acceptable chromium deposit shall be smooth, continuous, homogeneous, adherent, and free from pits, nodules, blisters, and other indications of harmful defects. Superficial staining will not be cause for rejection.	As Req'd			
12	Bake all parts. **NOTE** • Embrittlement relief will be initiated within 4 hours after plating. • If multiple plating is required, intermediate bakes of 4 hours may be done with the 23 hours bake after the final plating application.	23 hrs MIN		191 ± 14	375 ± 25
13	Any grinding of chrome plated steel parts shall be in accordance with MIL-STD-866.				
14	Reinspect deposit.	As Req'd			

Table 6-6. Chromium Electrodeposition on High Strength Steel Landing Gear Components Chromium Plating on Landing Gear Components Shall Meet the Requirements of MIL-STD-1501 - Continued

Step	Operation	Time	Solutions, Materials, and Current	Temp °C	Temp °F
15	Preserve with corrosion prevention compound if necessary.	As Req'd	MIL-PRF-16173, Grade 3 Alternates:	Room	Room
			MIL-C-82594	Room	Room
			MIL-PRF-32033	Room	Room

Table 6-7. Plating Chromium over Chromium

Step	Operation	Time	Solutions, Materials, and Current	Temp °C	Temp °F
1	Alkaline clean. Current to be OFF when immersing or withdrawing parts.	1 – 3 min	C-201 3 – 6 volts Anodic Alternates:	52 – 57	125 – 135
			C-203 3 – 6 volts Anodic	52 – 57	125 – 135
			C-204 3 – 6 volts Anodic	52 – 57	125 – 135
2	Rinse.	15 – 60 sec	Water	Room	Room
3	Etch. As Req'd to produce very uniform gassing.	As Req'd	C-305 6 volts Anodic **NOTE** Solutions C-407, C-408, uniform or C-409 may be used if C-305 is unavailable.	52 – 57	125 – 135
4	Immerse in chromium plating solution for 10 minutes without current.	10 min	C-407 Alternates:	52 – 57	125 – 135
			C-408	52 – 57	125 – 135
			C-409	52 – 57	125 – 135
5	Apply a minimum amount of current to produce gassing.	10 min			
6	Raise current slowly to proper range.	As Req'd			
7	Rinse.	15 – 300 sec	Water	Rm – 82	Rm – 180
8	Dry.	As Req'd	Shop Air	Room	Room

Table 6-7. Plating Chromium over Chromium - Continued

Step	Operation	Time	Solutions, Materials, and Current	Temp °C	Temp °F
9	Remove maskings.	As Req'd			
10	Inspect deposit. **NOTE** An acceptable chromium deposit shall be smooth, fine-grained, adherent, and free from blisters, pits, nodules, and indications of burning. Superficial staining resulting from rinsing operation is no cause for rejection.	As Req'd			
11	Bake as required by instruction on specific part.				

Table 6-8. Chromium Electrodeposition on Copper and Copper Base Alloys

Step	Operation	Time	Solutions, Materials, and Current	Temp °C	Temp °F
1	Prepare for plating.	As Req'd	Table 2-2	As Req'd	As Req'd
2	Alkaline clean.	1 – 3 min	C-201 3 – 6 volts Cathodic Alternates: Abrasive Blast	52 – 57	125 – 135
3	Rinse.	15 – 60 sec	Water	Room	Room
4	Nickel strike.	4 – 8 min	C-403 3.8 – 7.5 A/dm^2 (35 – 70 ASF) Alternates: C-412 3.8 – 7.5 A/dm^2	Room	Room
5	Rinse.	15 – 60 sec	Water	Room	Room
6	Chrome plate.	As Req'd	C-407 23.3 – 77.5 A/dm^2 (216 – 720 ASF)	52 – 54	125 – 130
7	Rinse.	15 – 60 sec	Water	Room	Room
8	Dry.	As Req'd	Shop Air	Room	Room
9	Remove masking.	As Req'd			

Table 6-8. Chromium Electrodeposition on Copper and Copper Base Alloys - Continued

Step	Operation	Time	Solutions, Materials, and Current	Temp °C	Temp °F
10	Inspect deposit. **NOTE** An acceptable chromium deposit shall be smooth, fine-grained, adherent, and free from blisters, pits, nodules, and indications of burning. Superficial staining resulting from rinsing operation is no cause for rejection.	As Req'd			

CHAPTER 7
COPPER ELECTRODEPOSITION

7.1 PURPOSE.

This chapter provides instructions for the electrodeposition of copper. The resulting coating shall meet or exceed the requirements of Standard SAE AMS 2418.

7.2 GENERAL.

Copper is a semi-hard, attractive, ductile metal which is corrosive resistant and highly conductive to both thermal and electrical influence. It is resistant to non-oxidizing acids but is readily dissolved by oxidizing acids. Since copper is highly susceptible to staining and tarnishing if not protected by a subsequent coating of lacquer, it is used primarily for its thermal and electrical properties rather than for its protective characteristics. Its main engineering applications are for undercoatings for subsequent deposits, transfer of heat and electricity, to provide an antiseize surface, and as a stop-off in nitriding, and carburizing operations. Its decorative applications are for its aesthetic purposes and production of antiqued finishes. Because copper is porous when electrodeposited, it is not recommended for corrosion protection of iron or steel except when overplated by applications of nickel and chromium.

7.3 PLATING APPLICATION.

Unless otherwise specified, the plating shall be applied after all basis metal heat treatments and mechanical operations, such as machining, brazing, welding, forming, and perforating of the article have been completed, unless copper is applied to facilitate a following operation. The basis metal shall be free from visible defects that will be detrimental to the appearance or protective value of the plating.

7.4 UNDERPLATING.

Unless otherwise specified, coppers shall be deposited directly on the basis metal without a preliminary plating of other metal except in the case of aluminum parts on which a preliminary zincate coating must be applied before subsequent plating.

7.5 PLATING.

The plating shall be smooth, continuous, adherent, uniform in appearance, and not coarsely crystalline, and shall be free from pinholes, blisters, nodules, pits, indications of burning, and other harmful imperfections. Slight staining or discoloration will not be cause for rejection.

7.6 EQUIPMENT.

7.6.1 Tank Construction. Tanks may be constructed of stainless steel, Pyrex, stoneware, or low carbon steel. Steel tanks lined with rubber or plastics are preferred to prevent stray currents and the formation of ferrocyanide.

7.6.2 Ventilation. The plating tank shall be equipped with a positive ventilation system capable of meeting or exceeding the ventilation requirements of AFOSHSTD 48-2.

7.6.3 Filtration. Continuous solution filtration through activated carbon should be provided to the plating solution to eliminate any possibility of organic contamination.

7.6.4 Agitation. Rapid solution circulation or movement of the cathode are essential to obtain optimum performance of the bath. Air agitation tends to cause rough deposits; therefore should be avoided.

7.6.5 Anodes. The anode system consists of round, elliptical, bar, flat, or cut shaped anodes suspended from bus bars, along the inside edge of the tank and connected to the positive terminal of the power source. The anodes shall be constructed of solid electrolytic copper conforming to commercially equivalent products under NSN 3426-00-276-9950 and may be rolled, cast, forged, extruded, or cut shaped. Lesser purity anodes may form heavy sludges during electrolysis and contribute to rough plated deposits. Excessive current densities tend to cause anode polarization; therefore, anode to cathode ratio should be maintained at a minimum of 2:1. Cotton, polypropylene, or nylon anode bags may be employed to prevent migration of minute anode particles to the cathode. When anode bags are employed, the anodes must be periodically removed from the tank, the bags removed, cleaned, and then reinstalled.

7.6.6 Power Source. Electrodeposition requires Direct Current (DC) which can be supplied from either generators or rectifiers. Most plating solutions operate between 0 and 14 volts. However, if plating is to be done on large parts at high current densities and with large anode-cathode distances, increased voltage may be necessary. Ripple value as measured with a true RMS voltmeter connected across the anode and cathode buss at the tank shall not exceed 10% of the DC operating voltage. Power sources will be certified semi-annually. Certification shall include a check of ripple, proper functioning of controls, and accuracy of all meters, counters, and timers which are integral parts of the power source.

7.7 BATH CHARACTERISTICS.

WARNING

Many plating solutions produce toxic mist and vapors, some of which are cumulative in nature. Therefore, precautions should be taken to avoid inhalation of fumes and any contact with skin or clothing.

a. The Rochelle Salts bath is composed of copper cyanide, sodium cyanide, sodium carbonate, sodium hydroxide, and Rochelle salts (sodium-potassium tartrate). This bath operates with low free cyanide, high current density, and efficiency. It produces high quality deposits and has excellent throwing power. It operates at a temperature of 49° – 57°C (120° – 135°F) and at a current density of 1 – 3.8 A/dm^2 (10 – 35 ASF), and has a cathode efficiency of approximately 50%. This efficiency can be varied by altering solution temperature and agitation. High current densities cause anode polarization which reduces solution efficiency and makes the solution difficult to control.

b. Free cyanide content promotes good anode corrosion and contributes to electrical conductivity. However, high free cyanide reduces cathode efficiency and causes dull deposits.

c. Sodium hydroxide improves anode corrosion, electrical conductivity, and throwing power, and regulates the pH of the solution.

d. Sodium carbonate facilitates pH control and reduces anode polarization while Rochelle salts aid anode corrosion and retard carbonate formation.

e. The Rochelle salts bath is susceptible to organic contamination and must be periodically batch treated with activated carbon and filtered. Metallic contamination can be removed electrically by DUMMYING the solution with a corrugated cathode and at a current density of 0.22 – 0.33 A/dm^2 (2 – 3 ASF).

f. The characteristics of the deposit can be improved by the current manipulation technique. There are two techniques that may be employed. One called PERIODIC REVERSAL PLATING in which parts are plated in the usual manner for a given time, then the current is reversed for a shorter time. These cycles are repeated until the desired deposit thickness is attained. The other technique is current interruption plating in which the part is plated in the usual manner for a short time. Current is interrupted for several seconds, then reapplied.

g. The major advantages of current manipulation are the production of brighter, leveler, and thicker deposits and the reduction of excessive build-up in the high-current density areas.

Table 7-1. Copper Stripping Procedure

Step	Operation	Time	Solutions, Materials, and Current	Temp °C	Temp °F
1	Vapor degrease. **WARNING** Solvent vapors are toxic. Avoid inhalation of vapors or contact with skin or clothing.	As Req'd	ASTM D4081 and ASTM D4376 (Tetrachloroethylene) Alternates:	120 – 124	248 – 256
			ASTM D4080 (Trichloroethylene) **NOTE** Not to be used where prohibited by state regulations.	88 – 90	187 – 194
2	Mask for stripping if necessary.	As Req'd			
3	Strip old plating.	As Req'd	From steel C-106 Immersion Only Alternates:	49 – 54	120 – 130
			C-139 Immersion Only	Room	Room

Table 7-1. Copper Stripping Procedure - Continued

Step	Operation	Time	Solutions, Materials, and Current	Temp °C	Temp °F
			From Aluminum or corrosion resistant steels. C-120 Immersion Only	Room	Room
4	Rinse.	As Req'd	Water	Rm – 82	Rm – 180
5	Examine for completeness of strip. Repeat Steps 3 through 5 if necessary.	As Req'd			
6	Remove masking.	As Req'd			
7	Rinse.	As Req'd	Water	49 – 82	120 – 180
8	Dry.	As Req'd	Shop Air	Room	Room
9	Preserve ferrous parts with corrosion prevention compound if necessary.	As Req'd	MIL-PRF-16173, Grade 3 Alternates:	Room	Room
			MIL-C-82594	Room	Room
			MIL-PRF-32033	Room	Room

Table 7-2. Copper Electrodeposition on Aluminum Alloys

Step	Operation	Time	Solutions, Materials, and Current	Temp °C	Temp °F
1	Strip anodize if necessary.	As Req'd	C-116 Immersion Only	71 – 82	160 – 180
2	Prepare part for plating.	As Req'd	Table 2-2		
3	Alkaline clean.	1 – 2 min	C-202 Immersion Only Alternates:	52 – 57	125 – 135
			C-205 Immersion Only	52 – 57	125 – 135
4	Rinse. **NOTE** Vigorous agitation must be used on Steps 4 through 15.	30 – 60 sec	Water	Room	Room
5	Etch.	10 – 30 sec	C-311 Immersion Only	Room	Room
6	Rinse.	30 – 60 sec	Water	Room	Room

Table 7-2. Copper Electrodeposition on Aluminum Alloys - Continued

Step	Operation	Time	Solutions, Materials, and Current	Temp °C	Temp °F
7	Etch.	10 – 30 sec	C-316 Immersion Only Alternates:	Room	Room
			C-304 Immersion Only	Room	Room
8	Rinse.	30 – 60 sec	Water	Room	Room
9	Zincate.	30 sec	C-410 Immersion Only	21 – 24	70 – 75
10	Strip Zincate.	5 – 20 sec	C-311 Immersion Only Alternates:	Room	Room
			C-310 Immersion Only	Room	Room
11	Rinse.	30 – 60 sec	Water	Room	Room
12	Etch.	10 – 30 sec	C-316 Immersion Only Alternates:	Room	Room
			C-304 Immersion Only	Room	Room
13	Rinse.	30 – 60 sec	Water	Room	Room
14	Zincate.	30 – 60 sec	C-410 Immersion Only	21 – 24	70 – 75
15	Rinse. **NOTE** If anodes are to be attached, they must be installed while part is submerged in water. Part must be kept wet between steps.	30 – 60 sec	Water	Room	Room
16	(OPTIONAL STEP) Copper strike. Current to be ON when immersing or withdrawing parts.	4 – 7 min	C-472 Use 2.6 A/dm^2 (24 ASF) for 2 minutes, then reduce to 1.3 A/dm^2 (12 ASF) for remainder of strike time.	38 – 54	100 – 130
17	Rinse.	30 – 60 sec	Water	Room	Room
18	Copper plate. Current to be ON when immersing parts.	As Req'd	C-415 1.1 – 3.8A/dm^2 (10 – 35 ASF)	49 – 57	120 – 135
19	Rinse.	As Req'd	Water	Rm – 82	Rm – 180

Table 7-2. Copper Electrodeposition on Aluminum Alloys - Continued

Step	Operation	Time	Solutions, Materials, and Current	Temp °C	Temp °F
20	Remove masking.	As Req'd			
21	Remove stains if necessary.	As Req'd	Pumice and cotton		
22	Rinse.	As Req'd	Water	49 – 82	120 – 180
23	Dry.	As Req'd	Shop Air	Room	Room
24	Inspect copper deposit. **NOTE** An acceptable copper deposit shall be adherent, lustrous, flat, smooth, continuous, and free from blisters, pits, nodules, deep scratches, indications of burning, or other harmful defects.	As Req'd			
25	Bake, unless otherwise specified, all parts.	1 hr MIN		191 ± 14	375 ± 25
26	Reinspect plated deposit.	As Req'd			
27	Preserve with corrosion prevention compound if necessary.	As Req'd	MIL-PRF-16173, Grade 3 Alternates:	Room	Room
			MIL-C-82594	Room	Room
			MIL-PRF-32033	Room	Room

Table 7-3. Copper Electrodeposition on Steel

Step	Operation	Time	Solutions, Materials, and Current	Temp °C	Temp °F
1	Stress relieve all ferrous parts having a hardness of Rockwell C 40 or above which have been machined, ground, cold-formed, or cold-straightened.	3 hrs MIN		191 ± 14	375 ± 25
2	Prepare part for plating.	As Req'd	Table 2-2		
3	Alkaline clean. Current to be OFF when immersing or withdrawing parts.	1 – 3 min	C-201 3 – 6 volts Anodic	52 – 57	125 – 135

Table 7-3. Copper Electrodeposition on Steel - Continued

Step	Operation	Time	Solutions, Materials, and Current	Temp °C	Temp °F
			Alternates:		
			C-203 3 – 6 volts Anodic	52 – 57	125 – 135
			C-204 3 – 6 volts Periodic reverse cycle, 10 sec anodic, 10 sec cathodic. End on anodic cycle.	52 – 57	125 – 135
4	Rinse.	15 – 60 sec	Water	Room	Room
5	Etch.	30 – 60 sec	C-302 Immersion Only Alternates:	Room	Room
			C-301 Immersion Only	Room	Room
			C-308 21.5 A/dm^2 (200 ASF) Anodic	Room	Room
			C-315 Immersion Only	Room	Room
6	Rinse.	15 – 60 sec	Water	Room	Room
7	Copper plate.	As Req'd	C-415 1.1 – 3.8 A/dm^2 (10 – 35 ASF) Alternates:	49 – 57	120 – 135
			C-416 2.2 – 10.8 A/dm^2 (20 – 100 ASF)	21 – 49	70 – 120
			C-433 8 – 13.5 A/dm^2 (75 – 125 ASF)	18 – 49	65 – 120
8	Rinse.	15 – 60 sec	Water	Rm – 82	Rm – 180
9	Dry.	As Req'd	Shop Air	Room	Room
10	Remove masking.	As Req'd			
11	Inspect deposit. **NOTE** An acceptable copper deposit shall be smooth, continuous, adherent, uniform in appearance, and not coarsely crystalline, and shall be free from pinholes, pits, nodules, blisters, and other harmful imperfections. Slight staining or discoloration will not be cause for rejection.	As Req'd			

Table 7-3. Copper Electrodeposition on Steel - Continued

Step	Operation	Time	Solutions, Materials, and Current	Temp °C	Temp °F
12	Bake as required. Less than RC 40 RC 40 – RC 43 RC 43 – RC 49 RC 49 or above **NOTE** Embrittlement relief will be initiated within 4 hours of plating.	MIN Times — 3 hrs 8 hrs 23 hrs		191 ± 14	375 ± 25
13	Reinspect deposit.	As Req'd			
14	Preserve ferrous parts with corrosion prevention compound.	30 – 60 sec	MIL-PRF-16173, Grade 3 Alternates:	Room	Room
			MIL-C-82594	Room	Room
			MIL-PRF-32033	Room	Room

Table 7-4. Copper Electrodeposition on Corrosion Resistant Steel

Step	Operation	Time	Solutions, Materials, and Current	Temp °C	Temp °F
1	Stress relieve all ferrous parts having a hardness of Rockwell C 40 or above which have been machined, ground, cold-formed, or cold-straightened.	3 hrs MIN		191 ± 14	375 ± 25
2	Prepare part for plating.	As Req'd	Table 2-2		
3	Alkaline clean. Current to be OFF when immersing or withdrawing parts.	1 – 3 min	C-201 3 – 6 volts Anodic Alternates:	52 – 57	125 – 135
			C-203 3 – 6 volts Anodic	52 – 57	125 – 135
			C-204 3 – 6 volts Periodic reverse cycle, 10 sec anodic, 10 sec cathodic. End on anodic cycle.	52 – 57	125 – 135
4	Rinse.	15 – 60 sec	Water	Room	Room

Table 7-4. Copper Electrodeposition on Corrosion Resistant Steel - Continued

Step	Operation	Time	Solutions, Materials, and Current	Temp °C	Temp °F
5	Etch. **NOTE** If smut is present after etch operation, repeat Steps 3 through 5 and eliminate current on Step 5.	15 – 60 sec	C-302 Immersion Only Alternates:	Room	Room
			C-304 10.5 A/dm^2 (100 ASF) Anodic	Room	Room
			C-309 21.5 A/dm^2 (200 ASF) Anodic	Room	Room
			C-315 Immersion Only	Room	Room
6	Rinse.	15 – 60 sec	Water	Room	Room
7	Nickel strike. Current to be ON when immersing or withdrawing part.	4 – 6 min	C-403 1.1 – 5.4 A/dm^2 (10 – 50 ASF)	Room	Room
8	Rinse.	15 – 60 sec	Water	Room	Room
9	(OPTIONAL STEP) Neutralize.	5 – 20	C-413 Immersion Only	Room	Room
10	Rinse.	15 – 60	Water	Room	Room
11	Copper strike. Current to be ON when immersing or withdrawing part.	30 sec	C-411 1.1 – 1.6 A/dm^2 (10 – 15 ASF)	49 – 54	120 – 130
12	Copper plate. Current to be ON when immersing part.	As Req'd	C-415 1.1 – 2.8 A/dm^2 (10 – 35 ASF) Alternates:	49 – 57	120 – 135
			C-416 2.2 – 10.8 A/dm^2 (20 – 100 ASF)	21 – 49	70 – 120
			C-433 8 – 13.5 A/dm^2 (75 – 125 ASF)	18 – 49	65 – 120
13	Rinse.	15 – 60 sec	Water	Rm – 82	Rm – 180
14	Dry.	As Req'd	Shop Air	Room	Room
15	Remove masking.	As Req'd			

Table 7-4. Copper Electrodeposition on Corrosion Resistant Steel - Continued

Step	Operation	Time	Solutions, Materials, and Current	Temp °C	Temp °F
16	Inspect deposit. **NOTE** An acceptable copper plating deposit shall be smooth, continuous, adherent, uniform in appearance, and not coarsely crystalline, and shall be free from pinholes, blisters, nodules, pits, and other harmful imperfections. Slight staining or discoloration will not be cause for rejection.	As Req'd			
17	Bake as required. Less than RC 40 RC 40 – RC 43 RC 43 – RC 49 RC 49 or above	MIN Times — 3 hrs 8 hrs 23 hrs		191 ± 14	375 ± 25
18	Reinspect deposit.	As Req'd			
19	Preserve ferrous parts with corrosion prevention compound if necessary.	30 – 60 sec	MIL-PRF-16173, Grade 3 Alternates:	Room	Room
			MIL-C-82594	Room	Room
			MIL-PRF-32033	Room	Room

Table 7-5. Copper Electrodeposition on Copper and Copper Base Alloys

Step	Operation	Time	Solutions, Materials, and Current	Temp °C	Temp °F
1	Prepare for plating.	As Req'd	Table 2-2 C-201 3 – 6 volts Cathodic	52 – 57	125 – 135
2	Alkaline clean. Current to be OFF during immersion or withdrawal of part.	30 – 90 sec	C-203 3 – 6 volts Cathodic	52 – 57	125 – 135
3	Rinse.	15 – 60 sec	Water	Room	Room
4	Acid dip.	20 – 30 sec	C-301	Room	Room

Table 7-5. Copper Electrodeposition on Copper and Copper Base Alloys - Continued

Step	Operation	Time	Solutions, Materials, and Current	Temp °C	Temp °F
5	Rinse.	15 – 60 sec	Water	Room	Room
6	Copper strike. Current to be ON during immersion or withdrawal of part.	3 – 5 min	C-411 1.6 – 4.8 A/dm^2 (15 – 45 ASF)	52 – 54	120 – 130
7	Nickel strike.	4 – 8 min	C-403 3.8 – 7.5 A/dm^2 (35 – 70 ASF)	Room	Room
8	Rinse.	15 – 60 sec	Water	Room	Room
9	Copper plate. Current to be ON when immersing or withdrawing part.	As Req'd	C-415 1.1 – 3.8 A/dm^2 (10 – 35 ASF)	49 – 57	120 – 135
10	Rinse.	15 – 60 sec	Water	Room	Room
11	Dry.	As Req'd	Shop Air	Room	Room
12	Remove masking.	As Req'd			
13	Inspect deposit. **NOTE** An acceptable copper plating deposit shall be smooth, continuous, adherent, uniform in appearance, and not coarsely crystalline and shall be free from pinholes, blisters, nodules, pits, and other harmful imperfections. Slight staining or discoloration will not be cause for rejection.	As Req'd			

Table 7-6. Plating Speed (Cyanide Bath) at 70% Cathode Efficiency

Average Thickness in Inches	A/dm^2 (ASF)					
	0.54 (5)	1.1 (10)	1.6 (15)	2.2 (20)	2.7 (25)	3.3 (30)
0.00005	7.1	3.6	2.4	1.8	1.4	1.2
0.00006	8.6	4.3	2.8	2.1	1.7	1.4
0.00007	10.0	5.0	3.3	2.5	2.0	1.7
0.00008	11.4	5.7	3.8	2.8	2.3	1.9
0.00009	12.8	6.4	4.3	3.2	2.6	2.1
0.0001	14.3	7.1	4.7	3.6	2.8	2.4
0.0002	28.5	14.2	9.5	7.1	5.7	4.8
0.0003	42.7	21.4	14.3	10.7	8.5	7.1
0.0004	57.0	28.5	19.0	14.2	11.4	9.5
0.0005	71.2	35.6	23.7	17.8	14.2	11.9
0.0006	85.5	42.7	28.5	21.4	17.1	14.2
0.0007	99.7	49.9	33.3	24.9	19.9	16.6
0.0008	114.0	57.0	37.9	28.5	22.8	19.0
0.0009	128.2	64.1	42.7	32.1	25.6	21.4
0.001	142.5	71.2	47.5	35.6	28.5	23.7
0.002	285.0	142.5	94.9	71.2	57.0	47.5
0.003	427.4	213.7	142.5	106.9	85.6	71.0
	Time in Minutes					

CHAPTER 8
GOLD ELECTRODEPOSITION

8.1 PURPOSE.

This chapter provides instructions for the electrodeposition of gold. The resulting coating shall meet or exceed the requirements of Specification SAE-AMS 2422.

8.2 GENERAL.

a. Gold is a soft, attractive, ductile metal which is resistant to chemical attack and tarnishing, and possesses excellent electrical and thermal conductance properties. It is used extensively for decorative purposes especially in the jewelry business while its largest engineering use is for application to electrical contact surfaces. Gold is also used prior to soldering applications, for thermal compression bonding, and for electroforming.

b. Gold should never be used where a hard wear resistance surface is required.

8.3 PLATING APPLICATION.

a. Unless otherwise specified, the plating shall be applied after all basis metal heat treatments and mechanical operations such as machining, brazing, welding, forming, and perforating of the article have been completed.

b. The basis metal shall be free from visible defects that will be detrimental to the appearance, operation, or protective value of the plating. The roughness of the basis metal surface prior to plating shall not exceed finished surface requirements.

8.4 UNDERPLATING.

Unless otherwise specified, parts shall be plated by the simplest method possible which is a copper strike followed by gold plating. If necessary, a copper; nickel; copper plus nickel; or copper plus silver strike or underplate may be necessary, depending on the application and the environment in which the part will be utilized. In no case shall any underplate be substituted for any part of the specified gold thickness.

8.5 PLATING.

The plating shall be smooth, fine-grained, continuous, adherent, bright, of a color normally associated with high quality 24-carat gold, and free from blisters, pits, nodules, indications of burning, and other imperfections detrimental to fabrication or to performance of parts. Slight discoloration resulting from rinsing or heating shall not be cause for rejection, provided that such discoloration does not deleteriously affect the solderability of the part.

8.6 EQUIPMENT.

8.6.1 Tank Construction. Gold plating tanks may be constructed of low carbon steel, stainless steel, Pyrex, stoneware, rubber, or plastic. Stainless steel tanks or steel tanks lined with rubber or plastic are preferred. Lined tanks eliminate stray currents and interference of ferrocyanide.

8.6.2 Ventilation. The plating tank shall be equipped with a positive ventilation system capable of meeting or exceeding the ventilation requirements of AFOSHSTD 48-2.

8.6.3 Filtration. Filtration should be done as necessary but may be done continuously. The use of carbon elements in the filter will help eliminate organic contamination. Filter material may be cotton, nylon, Dynel, polypropylene, or Teflon.

8.6.4 Agitation. Continuous agitation is not necessary, but periodic movement of the cathode during plating is recommended. Air Agitation should not be used.

8.6.5 Anodes. The anode system may consist of carbon, gold, gold-plated platinized titanium, platinized titanium, or 304 stainless steel plates suspended from bus bars connected to the positive terminal of the power source. Stainless steel anodes are the most popular with the metal content of the solution being maintained by frequent additions of gold salts. If a stainless steel tank is utilized to contain the solution, it can be used as the anode. Gold plating baths have excellent throwing power; therefore conforming anodes are seldom required. Anode to cathode area should be maintained at a ratio of 1:1.

8.6.6 Power Source. Electrodeposition requires Direct Current (DC) which can be supplied from either generators or rectifiers. Most plating solutions operate between 0 and 14 volts. However, if plating is to be done on large parts at high current densities and with large anode-cathode distances, increased voltage may be necessary. Ripple value as measured with a true RMS voltmeter connected across the anode and cathode buss at the tank shall not exceed 10% of the DC operating voltage. Power sources will be certified semi-annually. Certification shall include a check of ripple, proper functioning of controls, and accuracy of all meters, counters, and timers which are integral parts of the power source.

8.7 BATH CHARACTERISTICS.

WARNING

Many plating solutions produce toxic mist and vapors, some of which are cumulative in nature. Therefore, precautions should be taken to avoid inhalation of fumes and any contact with skin or clothing.

a. The gold cyanide bath is composed of potassium gold cyanide, potassium cyanide, potassium phosphate, and potassium carbonate. It operates at a temperature between 54° – 71°C (130° – 160°F) and at a current density of 0.22 – 0.54 A/dm^2 (2 – 5 ASF). Cathode efficiency ranges between 90 and 100%. Variations in metal concentration, current density, and solution pH change bath efficiency.

b. Gold plating solutions usually contain a double cyanide (potassium and gold). Potassium gold cyanide provides the metallic gold ions and potassium cyanide keeps the gold cyanide in solution, increases electrical conductivity, and inhibits deposition of other metals. Potassium carbonate buffers the solution, and improves solution conductivity and potassium phosphate increases solution conductivity, buffers the solution, and inhibits the formation of carbonates. Carbonates are formed from high bath temperature and air agitation of solution. High carbonate concentrations lower bath efficiency, increase plating time, and lower quality of deposit. High pH reduces the bright plating range and eventually produces red or smutty deposits.

c. Metallic impurities in the solution cannot be tolerated if color, quality of deposit, and corrosion resistance are to be maintained.

Table 8-1. Gold Stripping Procedure

Step	Operation	Time	Solutions, Materials, and Current	Temp °C	Temp °F
1	Vapor degrease. **WARNING** Solvent vapors are toxic. Avoid inhalation of vapors or contact with skin or clothing.	As Req'd	ASTM D4081 and ASTM D4376 (Tetrachloroethylene) Alternates:	120 – 124	248 – 256
			ASTM D4080 (Trichloroethylene) **NOTE** Not to be used where prohibited by state regulations.	88 – 90	187 – 194
2	Mask for stripping if necessary.	As Req'd			
3	Strip old plating.	As Req'd	From steel; nickel and copper alloys C-101 2 – 6 volts Anodic	20 – 25	68 – 77
			From aluminum alloys C-121 2 volts Anodic	38 – Max	100 – Max
4	Rinse.	As Req'd	Water	Rm – 82	Rm – 180
5	Examine for completeness of strip. Repeat Steps 3 through 5 if necessary.	As Req'd			
6	Remove masking.	As Req'd			

Table 8-1. Gold Stripping Procedure - Continued

Step	Operation	Time	Solutions, Materials, and Current	Temp °C	Temp °F
7	Rinse.	As Req'd	Water	49 – 82	120 – 180
8	Dry.	As Req'd	Shop Air	Room	Room
9	Preserve ferrous parts with corrosion prevention compound if necessary.	As Req'd	MIL-PRF-16173, Grade 3 Alternates:	Room	Room
			MIL-C-82594	Room	Room
			MIL-PRF-32033	Room	Room

Table 8-2. Gold Electrodeposition on Steel

Step	Operation	Time	Solutions, Materials, and Current	Temp °C	Temp °F
1	Stress relieve all steel parts that have been machined, ground, cold-formed, or cold-straightened.	3 hrs MIN		191 ± 14	375 ± 25
2	Prepare part for plating.	As Req'd	Table 2-2		
3	Alkaline clean. Current to be OFF when immersing or withdrawing parts.	1 – 3 min	C-201 3 – 6 volts Anodic Alternates:	52 – 57	125 – 135
			C-203 3 – 6 volts Anodic	52 – 57	125 – 135
			C-204 3 – 6 volts Periodic reverse cycle, 10 sec anodic, 10 sec cathodic, end cycle on anodic.	52 – 57	125 – 135
4	Rinse.	15 – 60 sec	Water	Room	Room
5	Etch.	30 – 60 sec	C-302 Immersion Only Alternates:	Room	Room
			C-301 Immersion Only	Room	Room
			C-308 21.5 A/dm^2 (200 ASF) Anodic	Room	Room
			C-315 Immersion Only	Room	Room
6	Rinse.	15 – 60 sec	Water	Room	Room
7	Copper strike.	3 – 5 min	C-411 1.6 – 4.8 A/dm^2 (15 – 45 ASF)	49 – 54	120 – 130

Table 8-2. Gold Electrodeposition on Steel - Continued

Step	Operation	Time	Solutions, Materials, and Current	Temp °C	Temp °F
	Current to be ON when immersing or withdrawing part.				
8	Rinse.	15 – 60 sec	Water	Room	Room
9	Gold plate.	As Req'd	C-427 0.2 – 0.54 A/dm^2 (2 – 5 ASF)	54 – 71	130 – 160
10	Rinse.	15 – 60 sec	Water	Rm – 82	Rm – 180
11	Dry.	As Req'd	Shop Air	Room	Room
12	Remove masking.	As Req'd			
13	Inspect deposit. **NOTE** An acceptable gold deposit shall be smooth, fine-grained, adherent, and free from exposed basis metal or underplate, blisters, pits, nodules, porosity, indications of burning, excessive edge build-up, and other harmful defects. Superficial staining shall not be cause for rejection.	As Req'd			
14	Bake as required. Less than RC 40. RC 40 – RC 43. RC 43 – RC 49. RC 49 and above. **NOTE** Embrittlement relief will be initiated within 4 hours after plating.	MIN Times — 3 hrs 8 hrs 23 hrs		191 ± 14	375 ± 25
15	Reinspect deposit.	As Req'd			
16	Preserve steel parts with corrosion prevention compound.	As Req'd	MIL-PRF-16173, Grade 3 Alternates:	Room	Room
			MIL-C-82594	Room	Room

Table 8-2. Gold Electrodeposition on Steel - Continued

Step	Operation	Time	Solutions, Materials, and Current	Temp °C	Temp °F
			MIL-PRF-32033	Room	Room

Table 8-3. Gold Electrodeposition on Surfaces Other Than Regular Steel

Step	Operation	Time	Solutions, Materials, and Current	Temp °C	Temp °F
1	Stress relieve all steel parts with a hardness of Rockwell C 40 or above.	MIN 3 hrs		191 ± 14	375 ± 25
2	Prepare part for plating.	As Req'd	Table 2-2		
3	Alkaline clean. Current to be OFF when immersing or withdrawing parts.	1 – 3 min	C-201 3 – 6 volts Anodic Alternates:	52 – 57	125 – 135
			C-203 3 – 6 volts Anodic	52 – 57	125 – 135
			C-204 3 – 6 volts Periodic reverse cycle, 10 sec anodic, 10 sec cathodic. End on anodic cycle.	52 – 57	125 – 135
4	Rinse.	15 – 60 sec	Water	Room	Room
5	Etch. **NOTE** If smut is present after etch operation repeat Steps 3 through 5 and eliminate current on Step 5.	15 – 60 sec	C-302 Immersion Only Alternates:	Room	Room
			C-304 10.7 A/dm^2 (100 ASF) Anodic	Room	Room
			C-309 21.5 A/dm^2 (200 ASF) Anodic	Room	Room
			C-315 Immersion Only	Room	Room
6	Rinse.	15 – 60 sec	Water	Room	Room
7	(STAINLESS STEEL ONLY) Nickel strike. Current to be ON when immersing or withdrawing part.	4 – 6 min	C-403 3.8 – 7.5 A/dm^2 (35 – 70 ASF)	Room	Room
	Rinse.	15 – 60 sec	Water	Room	Room

Table 8-3. Gold Electrodeposition on Surfaces Other Than Regular Steel - Continued

Step	Operation	Time	Solutions, Materials, and Current	Temp °C	Temp °F
	(SURFACES OTHER THAN NICKEL, SILVER, OR PLATINUM) Copper strike. Current to be ON when immersing or withdrawing part.	20 – 30 sec	C-411 1.6 – 4.8 A/dm^2 (15 – 45 ASF)	49 – 54	120 – 130
	Rinse.	15 – 60 sec	Water	Room	Room
8	(OPTIONAL STEP) Silver strike. Current to be ON when immersing or withdrawing part.	20 – 30 sec	C-417 1.6 – 3.8 A/dm^2 (15 – 35 ASF)	Room	Room
9	Rinse.	15 – 60 sec	Water	Room	Room
10	Gold plate.	As Req'd	C-427 0.2 – 0.54 A/dm^2 (2 – 5 ASF)	54 – 71	130 – 160
11	Rinse.	15 – 60 sec	Water	Rm – 82	Rm – 180
12	Dry.	As Req'd	Shop Air	Room	Room
13	Remove masking.	As Req'd			
14	Inspect deposit. **NOTE** An acceptable gold deposit shall be smooth, fine-grained, adherent, and free from exposed basis metal or underplate, blisters, pits, nodules, porosity, indications of burning, excessive edge build-up, or other detrimental defects. Superficial staining shall not be cause for rejection.	As Req'd			
15	Bake as required. Less than RC 40. RC 40 – RC 43. RC 43 – RC 49. RC 49 and above.	MIN Times — 3 hrs 8 hrs 23 hrs		191 ± 14	375 ± 25

Table 8-3. Gold Electrodeposition on Surfaces Other Than Regular Steel - Continued

Step	Operation	Time	Solutions, Materials, and Current	Temp °C	Temp °F
	NOTE Embrittlement relief will be initiated within 4 hours after plating.				
16	Reinspect plated deposit.	As Req'd			
17	Preserve steel parts with corrosion prevention compound if necessary.	As Req'd	MIL-PRF-16173, Grade 3 Alternates:	Room	Room
			MIL-C-82594	Room	Room
			MIL-PRF-32033	Room	Room

Table 8-4. Gold Electrodeposition on Copper and Copper Base Alloys

Step	Operation	Time	Solutions, Materials, and Current	Temp °C	Temp °F
1	Prepare for plating.	As Req'd	Table 2-2 C-201 3 – 6 volts Cathodic	52 – 57	125 – 135
2	Alkaline clean. Current to be OFF during immersion or withdrawal of part.	30 – 90 sec	C-203 3 – 6 volts Cathodic	52 – 57	125 – 135
3	Rinse.	15 – 60 sec	Water	Room	Room
4	Acid dip.	20 – 30 sec	C-301	Room	Room
5	Rinse.	15 – 60 sec	Water	Room	Room
6	Copper strike. Current to be ON during immersion or withdrawal of part.	3 – 5 min	C-411 1.6 – 4.8 A/dm^2 (15 – 45 ASF)	49 – 54	120 – 130
7	Nickel strike.	4 – 8 min	C-403 3.8 – 7.5 A/dm^2 (35 – 70 ASF)	Room	Room
8	Rinse.	15 – 60 sec	Water	Room	Room
9	Gold plate.	As Req'd	C-427 0.2 – 0.54 A/dm^2 (2 – 5 ASF)	54 – 71	130 – 160
10	Rinse.	15 – 60 sec	Water	Room	Room

Table 8-4. Gold Electrodeposition on Copper and Copper Base Alloys - Continued

Step	Operation	Time	Solutions, Materials, and Current	Temp °C	Temp °F
11	Dry.	As Req'd	Shop Air	Room	Room
12	Remove masking.	As Req'd			
13	Inspect deposit. **NOTE** An acceptable gold deposit shall be smooth, fine-grained, adherent, and free from exposed basis metal or underplate, blisters, pits, nodules, porosity, indications of burning, excessive edge build-up, and other harmful defects. Superficial staining shall not be cause for rejection.	As Req'd			

Table 8-5. Plating Speed at 95% Cathode Efficiency

Average Thickness in Inches	A/dm^2 (ASF)						
	0.2 (2)	0.27 (2.5)	0.32 (3)	0.38 (3.5)	0.43 (4)	0.48 (4.5)	0.54 (5)
0.00001	2.0	1.6	1.3	1.1	1.0	0.9	0.8
0.00002	3.9	3.1	2.6	2.2	2.0	1.7	1.6
0.00003	5.9	4.7	3.9	3.3	2.9	2.6	2.3
0.00004	7.8	6.2	5.2	4.5	3.9	3.5	3.1
0.00005	9.8	7.8	6.5	5.6	4.9	4.3	3.9
0.00006	11.7	9.4	7.8	6.7	5.9	5.2	4.7
0.00007	13.7	10.9	9.1	7.8	6.8	6.1	5.5
0.00008	15.6	12.5	10.4	8.9	7.8	6.9	6.2
0.00009	17.6	14.0	11.7	10.0	8.8	7.8	7.0
0.0001	19.5	15.6	13.0	11.1	9.8	8.7	7.8
0.0002	39.0	31.2	26.0	22.3	19.5	17.3	15.6
0.0003	58.5	46.8	39.0	33.4	29.3	26.0	23.4
0.0004	78.0	62.4	52.0	44.6	39.0	34.7	31.2
0.0005	97.5	78.0	65.0	55.7	48.8	43.3	39.0
0.0006	117.0	93.6	78.0	66.9	58.5	52.0	46.8
0.0007	136.5	109.2	91.0	78.0	68.3	60.7	54.6
0.0008	156.0	124.8	104.0	89.1	78.0	69.3	62.4
0.0009	175.5	140.4	117.0	100.3	87.8	78.0	70.2

Table 8-5. Plating Speed at 95% Cathode Efficiency - Continued

Average Thickness in Inches	A/dm^2 (ASF)						
	0.2 (2)	0.27 (2.5)	0.32 (3)	0.38 (3.5)	0.43 (4)	0.48 (4.5)	0.54 (5)
0.001	195.0	156.0	130.0	111.4	97.5	86.7	78.0
0.002	390.0	312.0	260.0	222.9	195.0	173.3	156.0
0.003	585.0	468.0	390.0	334.3	292.5	260.0	234.0
0.004	780.0	624.0	520.0	445.7	390.0	346.7	312.0
0.005	975.0	780.0	650.0	557.1	487.5	433.3	390.0
	Time in Minutes						

CHAPTER 9
INDIUM ELECTRODEPOSITION

9.1 PURPOSE.

This chapter provides instructions for the electrodeposition of indium and lead-indium.

9.2 GENERAL.

a. Indium is a very soft, silver-white, ductile metal with a satin-like texture and a low melting point 311°F (156°C). It is more tarnish resistant than silver and offers poor abrasion and wear resistance. Indium plating is diffused at relatively low temperatures into other metals to form surface alloys. When alloyed with brass, bronze, or copper it forms a hard, non-tarnishing surface that can be buffed to a high luster. When alloyed with lead or zinc it offers good corrosion protection.

b. The major application for indium is in the production of a lead-indium alloy to form a protective coating against seizing and corrosion on silver plated bearing surfaces. Indium is used in the electronics field and provides a low melting surface for soldering.

c. Indium coatings can be easily removed and reapplied without damage to underlying coatings such as silver.

9.3 PLATING APPLICATION.

Indium is rarely deposited for its own characteristics but rather for its alloying properties. It is deposited over other metals then heat treated to produce the desired alloy surface. The indium shall be deposited only after all other plating operations are complete and only then if the underlying metal is free from defects detrimental to the intended use of the item.

9.4 UNDERPLATING.

Indium may be deposited over undercoatings of cadmium, lead, silver, tin, or zinc according to its use. The major application is for bearing surfaces which requires that indium be deposited directly over lead to produce an anti-galling surface. In no case shall any underplate be substituted for any part of the specified indium thickness.

9.5 PLATING.

The plating shall be smooth, fine-grained, adherent, uniform in appearance, and be free from blisters, pits, nodules, excessive edge build-up, or other defects. Superficial staining which is the result of rinsing or heat treatments after plating shall not be cause for rejection.

9.6 EQUIPMENT.

9.6.1 Tank Construction. Indium platings may be constructed of stainless steel, glass, hard rubber or plastic, or low alloy steel tank lined with polyvinyl chloride.

9.6.2 Ventilation. The plating tank shall be equipped with a positive ventilation system capable of meeting or exceeding the ventilation requirements of AFOSHSTD 48-2.

9.6.3 Filtration. Filter solution as necessary to maintain a clear solution. Filtration through activated carbon is recommended to limit organic contamination.

9.6.4 Agitation. Moderate movement of part is recommended during plating. This movement can be done either manually or mechanically. Air agitation shall be avoided.

9.6.5 Anodes. The anode system consist of bar anodes suspended in bays, connected to the positive terminal of the power supply. Anodes may be constructed of indium, graphite, or platinum. When indium anodes are utilized in an acid solution, the indium concentration will rise due to anode efficiency being greater than cathode efficiency. This can be eliminated by the substitution of graphite or platinum for some of the indium anodes or by the alternate use of indium and platinum anodes. Anode to cathode area should be maintained at a 1:1 ratio.

9.6.6 Power Source. Electrodeposition requires Direct Current (DC) which can be supplied from either generators or rectifiers. Most plating solutions operate between 0 and 14 volts. However if plating is to be done on large parts at high current densities and with large anode-cathode distances, increased voltage may be necessary. Ripple value as measured with a true RMS voltmeter connected across the anode and cathode buss at the tank shall not exceed 10% of the DC operating voltage. Power sources will be certified semi-annually. Certification shall include a check of ripple, proper functioning of controls, and accuracy of all meters, counters, and timers which are integral parts of the power source.

9.7 BATH CHARACTERISTICS.

WARNING

Many plating solutions produce toxic mist and vapors, some of which are cumulative in nature. Therefore, precautions should be taken to avoid inhalation of fumes and any contact with skin or clothing.

a. The indium plating bath is composed of indium sulfate and sodium sulfate. It operates at a temperature of 21 – 60°C (70 – 140 °F), a current density of 1.1 – 3.3 A/dm^2 (10 – 30 ASF), and a solution pH of 2.0 – 2.7. Cathode efficiency is between 50 and 80% depending on solution pH and metallic concentration. Solution pH below 2.0 lowers efficiency and above 2.7 produces indium hydroxide. During plating, the pH of the solution increases when indium anodes are used and decreases when insoluble platinum or graphite anodes are used.

b. Correct use of soluble and insoluble anodes is a factor in control of pH and metallic indium concentration.

Table 9-1. Indium Stripping Procedure

Step	Operation	Time	Solutions, Materials, and Current	Temp °C	Temp °F
1	Vapor degrease. **WARNING** Solvent vapors are toxic. Avoid inhalation of vapors or contact with skin or clothing.	As Req'd	ASTM D4081 and ASTM D4376 (Tetrachloroethylene) Alternates:	120 – 124	248 – 256
			ASTM D4080 (Trichloroethylene) **NOTE** Not to be used where prohibited by state regulations.	88 – 90	187 – 194
2	Mask for stripping if necessary.	As Req'd			
3	Strip old plating. **CAUTION** Remove part as soon as stripping is complete to prevent attack of silver plating or basis metal.	As Req'd	From steel C-115 Immersion Only Alternates:	44 – 76	130 – 170
			C-109 4 Volts Anodic	82 – 93	180 – 200
4	Rinse.	As Req'd	Water	Rm – 82	Rm – 180
5	Examine for completeness of strip. Repeat Steps 3 through 5 if necessary.	As Req'd			

Table 9-1. Indium Stripping Procedure - Continued

Step	Operation	Time	Solutions, Materials, and Current	Temp °C	Temp °F
	CAUTION After stripping of old lead-indium plating, silver may have a dark matte appearance. Do not try to remove this dark finish by blasting.				
6	Remove masking.	As Req'd			
7	Rinse.	As Req'd	Water	49 – 82	120 – 180
8	Dry.	As Req'd	Shop Air	Room	Room
9	Preserve ferrous parts with corrosion prevention compound if necessary.	As Req'd	MIL-PRF-16173, Grade 3 Alternates:	Room	Room
			MIL-C-82594	Room	Room
			MIL-PRF-32033	Room	Room

Table 9-2. Indium Electrodeposition on Steel

Step	Operation	Time	Solutions, Materials, and Current	Temp °C	Temp °F
1	Stress relieve all steel parts having a hardness of Rockwell C 40 or above.	3 hrs MIN		191 ± 14	375 ± 25
2	Prepare part for plating.	As Req'd	Table 2-2		
3	Alkaline clean. Current to be OFF when immersing or withdrawing parts.	1 – 3 min	C-201 3 – 6 Volts Anodic	52 – 57	125 – 135
			C-203 3 – 6 Volts Anodic	52 – 57	125 – 135
			C-204 3 – 6 Volts Periodic reverse cycle, 10 sec anodic, 10 sec cathodic. End cycle on anodic.	52 – 57	125 – 135
4	Rinse.	15 – 60 sec	Water	Room	Room
5	Etch.	30 – 60 sec	C-301 Immersion Only Alternates:	Room	Room

Table 9-2. Indium Electrodeposition on Steel - Continued

Step	Operation	Time	Solutions, Materials, and Current	Temp °C	Temp °F
			C-308 21.5 A/dm^2 (200 ASF) Anodic	Room	Room
			C-315 Immersion Only	Room	Room
6	Rinse.	15 – 60 sec	Water	Room	Room
7	Indium plate.	As Req'd	C-429 1.1 – 3.3 A/dm^2 (10 – 30 ASF)	21 – 60	70 – 140
8	Rinse.	15 – 60 sec	Water	Rm – 82	Rm – 180
9	Dry.	As Req'd	Shop Air	Room	Room
10	Remove masking.	As Req'd			
11	Inspect plated deposit. **CAUTION** Do not touch dry plating with fingers. **NOTE** An acceptable deposit will be smooth, adherent, and free from blisters, pits, nodules, indications of burning, and other defects harmful to the intended use of the part.	As Req'd			
12	Bake parts in oil.	3 hrs	MIL-PRF-53074, Grade 5190	160 ± 5	320 ± 10
13	Vapor degrease. **WARNING** Solvent vapors are toxic. Avoid inhalation of vapors or contact with skin or clothing.	As Req'd	ASTM D4081 and ASTM D4376 (Tetrachloroethylene) Alternates:	120 – 124	248 – 256
			ASTM D4080 (Trichloroethylene) **NOTE** Not to be used where prohibited by state regulations.	88 – 90	187 – 194
14	Reinspect plated deposit.	As Req'd			
15	Preserve steel parts with corrosion prevention compound.	As Req'd	MIL-PRF-16173, Grade 3	Room	Room

Table 9-2. Indium Electrodeposition on Steel - Continued

Step	Operation	Time	Solutions, Materials, and Current	Temp °C	Temp °F
			Alternates:		
			MIL-C-82594	Room	Room
			MIL-PRF-32033	Room	Room

Table 9-3. Lead-Indium Electrodeposition over Silver

Step	Operation	Time	Solutions, Materials, and Current	Temp °C	Temp °F
1	Stress relieve all steel parts having a hardness of Rockwell C 40 or above.	3 hrs MIN		191 ± 14	375 ± 25
2	Prepare part for plating.	As Req'd	Table 2-2		
3	Alkaline clean. Current to be OFF when immersing or withdrawing parts.	1 – 3 min	C-201 3 – 6 Volts Anodic Alternates:	52 – 57	125 – 135
			C-203 3 – 6 Volts Anodic	52 – 57	125 – 135
			C-204 3 – 6 Volts Periodic reverse cycle, 10 sec anodic, 10 sec cathodic. End on anodic cycle.	52 – 57	125 – 135
4	Rinse.	15 – 60 sec	Water	Room	Room
5	Etch.	30 – 60 sec	C-301 Immersion Only Alternates:	Room	Room
			C-308 Immersion Only	Room	Room
			C-315 Immersion Only	Room	Room
6	Rinse.	15 – 60 sec	Water	Room	Room
7	Lead plate. **NOTE** Lead plating should be approximately 3 times as thick as indium plating.	As Req'd	C-425 1.1 – 1.6 A/dm^2 (10 – 15 ASF)	Room	Room
8	Rinse.	15 – 60 sec	Water	Room	Room
9	Indium plate.	As Req'd	C-429 1.1 – 3.3 A/dm^2 (10 – 30 ASF)	21 – 60	70 – 140
10	Rinse.	15 – 60 sec	Water	Rm – 82	Rm – 180

Table 9-3. Lead-Indium Electrodeposition over Silver - Continued

Step	Operation	Time	Solutions, Materials, and Current	Temp °C	Temp °F
11	Dry. **NOTE** Do not touch plating with fingers.	As Req'd	Shop Air	Room	Room
12	Remove masking.	As Req'd			
13	Inspect plated deposit. **NOTE** An acceptable lead indium coating shall be smooth, adherent, and free from blisters, pits, nodules, indications of burning, and other defects detrimental to the performance of the part.	As Req'd			
14	Bake parts in oil.	3 hrs	MIL-PRF-53074, Grade 5190	160 ± 5	320 ± 10
15	Vapor degrease. **WARNING** Solvent vapors are toxic. Avoid inhalation of vapors or contact with skin or clothing.	As Req'd	ASTM D4081 and ASTM D4376 (Tetrachloroethylene) Alternates:	120 – 124	248 – 256
			ASTM D4080 (Trichloroethylene) **NOTE** Not to be used where prohibited by state regulations.	88 – 90	187 – 194
16	Reinspect plated deposit.	As Req'd			
17	Preserve with corrosion prevention compound.	As Req'd	MIL-PRF-16173, Grade 3 Alternates:	Room	Room
			MIL-C-82594	Room	Room
			MIL-PRF-32033	Room	Room

CHAPTER 10
LEAD ELECTRODEPOSITION

10.1 PURPOSE.

This chapter provides information and instructions on the electrodeposition of lead. The plating shall conform to the requirements of Specification MIL-L-13808.

10.2 GENERAL.

Lead is a heavy, soft, ductile metal with an unattractive, dull bluish-gray appearance. It has a melting point of 327°C (618°F). It exhibits poor abrasion and wear resistance, stains easily, and is resistant to many chemicals. Pore-free lead coatings deter corrosion by forming a superficial oxide film, which repairs injuries to the coatings. While lead provides good protection in industrial environments it is not recommended for use in marine environments. The major uses for lead are to provide corrosion protection, improve bearing performance, and prevent galling of metal parts. Its properties are expanded and improved when alloyed with tin and tin-antimony. Due to its relative softness, its application is limited to areas which do not involve abrasion and other mechanical abuse.

10.3 PLATING APPLICATION.

Unless otherwise specified, the plating shall be applied after all basis metal heat treatments and mechanical operations such as machining, brazing, welding, forming, and perforating of the article have been completed. The basis metal shall be free from visible defects that will be detrimental to the appearance or protective value of the plating or intended use of the article.

10.4 UNDERPLATING.

Unless otherwise specified, the plating shall be deposited directly on the basis metal, except in cases where extreme difficulty is experienced in plating directly on the basis metal or where coating is used for corrosion protection; in which case, a cyanide copper strike is permissible. In no case shall any underplate be substituted for any part of the specified lead thickness.

10.5 PLATING.

The plating shall be smooth, fine-grained, adherent, continuous, and free from blisters, pits, nodules, indications of burning, excessive build-up, staining, and other defects detrimental to the intended use of the article. Superficial staining or slight discoloration resulting from rinsing or baking operations will not be cause for rejection.

10.6 EQUIPMENT.

10.6.1 Tank Construction. Suitable materials for the construction of lead plating tanks are rubber, plastic, and stainless steel.

10.6.2 Ventilation. The plating tank shall be equipped with a positive ventilation system capable of meeting or exceeding the ventilation requirements of AFOSHSTD 48-2.

10.6.3 Filtration. Occasional filtration should be provided to remove inorganic impurities from the solution. Periodic filtration through carbon filters helps remove organic impurities but also removes some of the additive agents which must be replaced.

10.6.4 Agitation. The solution has a tendency to stratify when still, therefore, must be stirred before use and after chemical additions. Mild cathode agitation is beneficial during plating. Agitation can be accomplished by continuous solution filtration.

10.6.5 Anodes. The anode system consists of high-purity lead anodes suspended in bays and connected to the positive terminal of the power supply. Auxiliary conforming anodes are of benefit when plating inside diameters or parts with complex configurations. The anodes may come in a variety of shapes but must be constructed of high-purity lead if rough plated deposits are to be avoided. The anodes should be bagged in Dynel, Dacron, Vinyon, or Polypropylene. Anode to cathode area should be maintained at a 2:1 ratio.

10.6.6 Power Source. Electrodeposition requires Direct Current (DC) which can be supplied from either generators or rectifiers. Most plating solutions operate between 0 and 14 volts. However if plating is to be done on large parts at high current densities and with large anode-cathode distances, increased voltage may be necessary. Ripple value as measured with a true RMS voltmeter connected across the anode and cathode buss and the tank shall not exceed 10% of the DC operating voltage. Power sources will be certified semi-annually. Certification shall include a check of ripple, proper functioning of controls, and accuracy of all meters, counters, and timers which are integral parts of the power source.

10.7 BATH CHARACTERISTICS.

WARNING

Many plating solutions produce toxic mist and vapors, some of which are cumulative in nature. Therefore, precautions should be taken to avoid inhalation of fumes and any contact with skin or clothing.

a. The lead solution is composed of lead fluoborate, fluoboric acid, boric acid, and animal glue. The bath is generally prepared from a commercially procured lead fluoborate concentrate. The concentrate contains sufficient free fluoboric acid and excess boric acid so that when diluted with water to obtain the desired lead content, the other constituents are present in the correct concentrations. Animal glue is then added to the solution to reduce grain size, treeing, and improve throwing power. The bath operates at a temperature of 24 – 38°C (75 – 100°F) and a current density between 10 and 15 ASF. The throwing power and covering power are poor and conforming anodes are often required to obtain satisfactory plated deposits.

b. Cathode and anode efficiencies are 100%; therefore, infrequent additions of lead are required. The pH needs no control but the free fluoboric acid must be maintained above 4 oz/gal.

c. Periodic sludge removal is necessary. This is done by decanting the solution, then filtering it back into the plating tank. The metallic impurities can be removed by low current density electrolysis and organic contaminants can be removed by treatment with activated charcoal or filtering through charcoal filters.

Table 10-1. Plating Speed at 98% Cathode Efficiency

Average Thickness in Inches	A/dm^2 (ASF)					
	1.1 (10)	1.2 (11)	1.3 (12)	1.4 (13)	1.5 (14)	1.6 (15)
0.00001	0.4	0.4	0.4	0.3	0.3	0.3
0.00002	0.8	0.8	0.7	0.6	0.6	0.6
0.00003	1.3	1.1	1.1	1.0	0.9	0.8
0.00004	1.7	1.5	1.4	1.3	1.2	1.1
0.00005	2.1	1.9	1.8	1.6	1.5	1.4
0.00006	2.5	2.3	2.1	1.9	1.8	1.7
0.00007	2.9	2.7	2.5	2.3	2.1	2.0
0.00008	3.4	3.1	2.8	2.6	2.4	2.2
0.00009	3.8	3.4	3.2	2.9	2.7	2.5
0.0001	4.2	3.8	3.5	3.2	3.0	2.8
0.0002	8.4	7.6	7.0	6.5	6.0	5.6
0.0003	12.6	11.5	10.5	9.7	9.0	8.4
0.0004	16.8	15.3	14.0	12.9	12.0	11.2
0.0005	21.0	19.1	17.5	16.2	15.0	14.0
0.0006	25.2	22.9	21.0	19.4	18.0	16.8
0.0007	29.4	26.7	24.5	22.6	21.0	19.6
0.0008	33.6	30.5	28.0	25.8	24.0	22.4
0.0009	37.8	34.4	31.5	29.1	27.0	25.2
0.001	42.0	38.2	35.0	32.3	30.0	28.0
0.002	84.0	76.4	70.0	64.6	60.0	56.0
0.003	126.0	114.5	105.0	96.9	90.0	84.0
0.004	168.0	152.7	140.0	129.2	120.0	112.0

Table 10-1. Plating Speed at 98% Cathode Efficiency - Continued

Average Thickness in Inches	A/dm² (ASF)					
	1.1 (10)	1.2 (11)	1.3 (12)	1.4 (13)	1.5 (14)	1.6 (15)
0.005	210.0	190.9	175.0	161.5	150.0	140.0
0.006	252.0	229.1	210.0	193.8	180.0	168.0
0.007	294.0	267.3	245.0	226.2	210.0	196.0
0.008	336.0	305.5	280.0	258.5	240.0	224.0
0.009	378.0	343.6	315.0	290.8	270.0	252.0
0.010	420.0	381.8	350.0	323.1	300.0	280.0
0.011	462.0	420.0	385.0	355.4	330.0	308.0
0.012	504.0	458.2	420.0	387.7	360.0	336.0
0.013	546.0	496.4	455.0	420.0	390.0	364.0
0.014	588.0	534.5	490.0	452.3	420.0	392.0
0.015	630.0	572.7	525.0	484.6	450.0	420.0
0.016	672.0	610.9	560.0	516.9	480.0	448.0
0.017	714.0	649.1	595.0	549.2	510.0	476.0
0.018	756.0	687.3	630.0	581.5	540.0	504.0
0.019	798.0	725.5	665.0	613.8	570.0	532.0
0.020	840.0	763.6	700.0	646.2	600.0	560.0
	Time in Minutes					

Table 10-2. Lead Stripping Procedure

Step	Operation	Time	Solutions, Materials, and Current	Temp °C	Temp °F
1	Vapor degrease. **WARNING** Solvent vapors are toxic. Avoid inhalation of vapors or contact with skin or clothing.	As Req'd	ASTM D4081 and ASTM D4376 (Tetrachloroethylene) Alternates:	120 – 124	248 – 256
			ASTM D4080 (Trichloroethylene) **NOTE** Not to be used where prohibited by state regulations.	88 – 90	187 – 194
2	Mask for stripping if necessary.	As Req'd			
3	Strip old plating.	As Req'd	From Copper alloys C-112 Immersion Only	Room	Room
			From Steel C-109 2 – 4 Volts Anodic Alternates:	Rm – 49	Rm – 120

Table 10-2. Lead Stripping Procedure - Continued

Step	Operation	Time	Solutions, Materials, and Current	Temp °C	Temp °F
			C-113 Immersion Only	49 – 54	120 – 130
			From Aluminum alloys C-119 Immersion Only	Room	Room
4	Rinse.	As Req'd	Water	Rm – 82	Rm – 180
5	Examine for completeness of strip. Repeat Steps 3 thru 5 if necessary.	As Req'd			
6	Remove masking.	As Req'd			
7	Rinse.	As Req'd	Water	49 – 82	120 – 180
8	Dry.	As Req'd	Shop Air	Room	Room
9	Preserve ferrous parts with corrosion prevention compound if necessary.	As Req'd	MIL-PRF-16173, Grade 3 Alternates	Room	Room
			MIL-C-82594	Room	Room
			MIL-PRF-32033	Room	Room

Table 10-3. Lead Electrodeposition on Steel

Step	Operation	Time	Solutions, Materials, and Current	Temp °C	Temp °F
1	Stress relieve all steel parts having a hardness of Rockwell C 40 or above which have been machined, ground, cold-formed, or cold-straightened.	3 hrs MIN		191 ± 14	375 ± 25
2	Prepare part for plating.	As Req'd	Table 2-2		
3	Alkaline clean. Current to be OFF when immersing or withdrawing parts.	1 – 3 min	C-201 3 – 6 Volts Anodic Alternates:	52 – 57	125 – 135
			C-203 3 – 6 Volts Anodic	52 – 57	125 – 135
			C-204 3 – 6 Volts Periodic reverse cycle, 10 sec anodic, 10 sec cathodic. End on anodic cycle.	52 – 57	125 – 135
4	Rinse.	15 – 60 sec	Water	Room	Room

Table 10-3. Lead Electrodeposition on Steel - Continued

Step	Operation	Time	Solutions, Materials, and Current	Temp °C	Temp °F
5	Etch.	30 – 60 sec	C-301 Immersion Only Alternates:	Room	Room
			C-308 21.5 A/dm$_2$ (200 ASF) Anodic	Room	Room
			C-315 Immersion Only	Room	Room
6	Rinse.	15 – 60 sec	Water	Room	Room
7	Lead plate.	As Req'd	C-425 1.1 – 1.6 A/dm$_2$ (10 – 15 ASF)	24 – 28	75 – 100
8	Rinse.	As Req'd	Water	Rm – 82	Rm – 180
9	Dry.	As Req'd	Shop Air	Room	Room
10	Remove masking.	As Req'd			
11	Inspect plated deposit. **NOTE** An acceptable lead deposit shall be adequately bonded to the underlying metal and when used as a bearing surface, shall be smooth, continuous, free from blisters, and other harmful imperfections. Slight staining or discoloration will not be cause for rejection.	As Req'd			
12	Bake unless otherwise specified, all steel parts having a hardness of Rockwell C 40 or above. **NOTE** Embrittlement relief will be initiated within 4 hours of plating.	3 hrs MIN		191 ± 14	375 ± 25
13	Reinspect deposit.	As Req'd			
14	Preserve steel parts with corrosion prevention compound.	As Req'd	MIL-PRF-16173, Grade 3 Alternates:	Room	Room
			MIL-C-82594	Room	Room

Table 10-3. Lead Electrodeposition on Steel - Continued

Step	Operation	Time	Solutions, Materials, and Current	Temp °C	Temp °F
			MIL-PRF-32033	Room	Room

Table 10-4. Lead Electrodeposition on Stainless Steel

Step	Operation	Time	Solutions, Materials, and Current	Temp °C	Temp °F
1	Stress relieve all steel parts having a hardness of Rockwell C 40 or above which have been machined, ground, cold-formed, or cold-straightened.	3 hrs MIN		191 ± 14	375 ± 25
2	Prepare part for plating.	As Req'd	Table 2-2		
3	Alkaline clean. Current to be OFF when immersing or withdrawing parts.	1 – 3 min	C-201 3 – 6 Volts Anodic Alternates:	52 – 57	125 – 135
			C-203 3 – 6 Volts Anodic	52 – 57	125 – 135
			C-204 3 – 6 Volts Periodic reverse cycle, 10 sec anodic, 10 sec cathodic. End on anodic cycle.	52 – 57	125 – 135
4	Rinse.	15 – 60 sec	Water	Room	Room
5	Etch.	15 – 60 sec	C-302 Immersion Only Alternates:	Room	Room
			C-304 10.7 A/dm$_2$ (100 ASF) Anodic	Room	Room
			C-309 21.5 A/dm$_2$ (200 ASF) Anodic	Room	Room
			C-315 Immersion Only	Room	Room
6	Rinse.	15 – 60 sec	Water	Room	Room
7	Nickel strike. Current to be ON when immersing or withdrawing part.	4 – 6 min	C-403 3.8 – 7.5 A/dm$_2$ (35 – 70 ASF)	Room	Room
8	Rinse.	15 – 60 sec	Water	Room	Room
9	Lead plate.	As Req'd	C-425 1.1 – 1.6 A/dm$_2$ (10 – 15 ASF)	24 – 38	75 – 100
10	Rinse.	15 – 60 sec	Water	Rm – 82	Rm – 180

Table 10-4. Lead Electrodeposition on Stainless Steel - Continued

Step	Operation	Time	Solutions, Materials, and Current	Temp °C	Temp °F
11	Dry.	As Req'd	Shop Air	Room	Room
12	Remove masking.	As Req'd			
13	Inspect plated deposit. **NOTE** An acceptable lead deposit shall be adequately bonded to the underlying metal and when used as a bearing surface, shall be smooth, continuous, and free from blisters, and other harmful imperfections. Slight staining or discoloration will not be cause for rejection.	As Req'd			
14	Bake all steel parts having a hardness of Rockwell C 40 or above. **NOTE** Embrittlement relief will be initiated within 4 hours of plating.	3 hrs MIN		191 ± 14	375 ± 25
15	Reinspect plated deposit.	As Req'd			
16	Preserve with corrosion prevention compound if necessary.	As Req'd	MIL-PRF-16173, Grade 3 Alternates:	Room	Room
			MIL-C-82594	Room	Room
			MIL-PRF-32033	Room	Room

CHAPTER 11
LEAD-TIN-ANTIMONY ELECTRODEPOSITION

11.1 PURPOSE.

This chapter provides instruction for the application of a Lead-Tin-Antimony alloy to bearing surfaces.

11.2 GENERAL.

Lead-Tin-Antimony (LTA) is a soft, dull gray, ductile, tri-metallic alloy consisting of approximately 82% lead, 11% tin, and 7% antimony. It has poor wear and abrasion resistance and good anti-galling properties. The chief uses for LTA are: (1) as a solder base, (2) as a running surface for bearings, and (3) a break in surface for machine parts.

11.3 PLATING APPLICATION.

Unless otherwise specified, the plating shall be applied after all basis metal heat treatments and mechanical operations have been completed and preliminary coatings of silver have been applied.

11.4 UNDERPLATING.

Unless otherwise specified, the LTA will be applied over an acceptable, well-bonded, silver plated surface conforming to the requirements of Specification ASTM B700. In no case shall any underplate be substituted for any part of the specified LTA thickness.

11.5 PLATING.

The plating shall be smooth, fine-grained, adherent, and free from blisters, pits, nodules, indications of burning, and other defects detrimental to the intended use of the article. Superficial staining resulting from rinsing or baking operations shall not be cause for rejection.

11.6 EQUIPMENT.

11.6.1 Tank Construction. The plating tank can be constructed of hard rubber, plastic, 306 series stainless steel or low alloy steel lined with polyvinyl chloride.

11.6.2 Ventilation. The plating tank shall be equipped with a positive ventilation system capable of meeting or exceeding the ventilation requirements of AFOSHSTD 48-2.

11.6.3 Filtration. The solution shall be filtered continuously to remove insoluble material from the solution. The filter system may be constructed of 306 series stainless steel or plastic. Filter tubes may be Dynel, Dacron, or Vinyon.

11.6.4 Agitation. Mild mechanical agitation of the cathode shall be provided during the plating operation.

11.6.5 Anodes. The anode system usually consist of bar anodes suspended in bays and connected to the positive terminal of the power supply. The anodes shall be constructed of 89% lead and 11% tin and be bagged to prevent rough plated deposits.

11.6.6 Power Source. Electrodeposition requires Direct Current (DC) which can be supplied from either generators or rectifiers. Most plating solutions operate between 0 and 14 volts. However if plating is to be done on large parts at high current densities and with large anode-cathode distances, increased voltage may be necessary. Ripple value as measured with a true RMS voltmeter connected across the anode and cathode buss at the tank shall not exceed 10% of the DC operating voltage. Power sources will be certified semi-annually. Certification shall include a check of ripple, proper functioning of controls, and accuracy of all meters, counters, and timers which are integral parts of the power source.

11.7 BATH CHARACTERISTICS.

WARNING

Many plating solutions produce toxic mist and vapors, some of which are cumulative in nature. Therefore, precautions should be taken to avoid inhalation of fumes and any contact with skin or clothing.

a. Operating limits for the LTA plating bath must be closely adhered to since only minor variations in temperature, rate of agitation, or the concentration of certain constituents can result in major changes in the composition of the plated deposit.

b. The bath operates at a temperature of 20 – 22°C (68 – 72°F) and a current density of 3.3 – 4.8 A/dm^2 (30 – 45 ASF). Cathode efficiency is essentially 100%.

c. The solution is composed of lead fluoborate, tin fluoborate, antimony fluoborate, boric acid, fluoboric acid, hydroquinone, and EDAMIN-R. The metal fluoborates supply the metal ions. The fluoboric acid renders the metals soluble. Boric acid ensures that all hydrofluoric acid has been reacted, peptone promotes codeposition of tin, and

the hydroquinone promotes codeposition of lead. No limits are given for the concentration of fluoboric acid, boric acid, peptone, or hydroquinone since the only way they can be diminished is through drag-out losses.

d. Since the anodes contain no antimony, the antimony content of the solution must be maintained by the addition of antimony fluoborate concentrate.

Table 11-1. Stripping Lead-Tin-Antimony

Step	Operation	Time	Solutions, Materials, and Current	Temp °C	Temp °F
1	Vapor degrease. **WARNING** Solvent vapors are toxic. Avoid inhalation of vapors or contact with skin or clothing.	As Req'd	ASTM D4081 and ASTM D4376 (Tetrachloroethylene) Alternates:	120 – 124	248 – 256
			ASTM D4080 (Trichloroethylene) **NOTE** Not to be used where prohibited by state regulations.	88 – 90	187 – 194
2	Mask for stripping if necessary.	As Req'd			
3	Strip old plating.	3 min	C-112 Immersion Only	Room	Room
4	Rinse.	As Req'd	Water	Rm – 82	Rm – 180
5	Clean area to be stripped.	As Req'd	CP-3 Alternates: CP-4		
6	Examine for removal of old deposit. Repeat Steps 3 through 6 if necessary.				
7	Neutralize.	30 – 60 sec	C-413 Immersion Only	52 – 57	125 – 135
8	Rinse.	As Req'd	Water	Rm – 82	Rm – 180
9	Dry.	As Req'd	Shop Air		
10	Remove masking.	As Req'd			
11	Preserve steel parts with corrosion prevention compound if necessary.	As Req'd	MIL-PRF-16173, Grade 3 Alternates:	Room	Room
			MIL-C-82594	Room	Room
			MIL-PRF-32033	Room	Room

Table 11-2. Lead-Tin-Antimony Electrodeposition on Bearing Surfaces

Step	Operation	Time	Solutions, Materials, and Current	Temp °C	Temp °F
1	Prepare part for plating. **NOTE** Surfaces previously plated may be dark in color after cleaning. Do not attempt to remove this dark color as deterioration of the silver plating usually results.	As Req'd	Table 2-2		
2	Alkaline clean.	30 – 60 sec	C-201 Immersion Only Alternates:	52 – 57	125 – 135
			C-203 Immersion Only	52 – 57	125 – 135
			C-204 Immersion Only	52 – 57	125 – 135
3	Rinse.	30 – 60 sec	Water	Room	Room
4	LTA plate current to be OFF when immersing part.	As Req'd	C-426 3.3 – 4.8 A/dm^2 (30 – 45 ASF)	20 – 22	68 – 72
5	Rinse.	As Req'd	Water	Room	Room
6	Neutralize.	30 – 60 sec	C-413 Immersion Only	52 – 57	125 – 135
7	Rinse.	As Req'd	Water	Room	Room
8	Remove masking. **NOTE** Keep part damp while removing masking.	As Req'd			
9	Preserve in oil while part is still damp.	10 min	MIL-PRF-53074, Grade 5190	Room	Room
10	Vapor degrease. **WARNING** Solvent vapors are toxic. Avoid inhalation of vapors or contact with skin or clothing.	1 min	ASTM D4081 and ASTM D4376 (Tetrachloroethylene) Alternates:	120 – 124	248 – 256
			ASTM D4080 (Trichloroethylene) **NOTE** Not to be used where prohibited by state regulations.	88 – 90	187 – 194

Table 11-2. Lead-Tin-Antimony Electrodeposition on Bearing Surfaces - Continued

Step	Operation	Time	Solutions, Materials, and Current	Temp °C	Temp °F
11	Remove stains from unplated areas.	As Req'd	Crocus cloth		
12	Bake in oil.	3 hrs	MIL-PRF-53074, Grade 5190	166 – 177	330 – 350
13	Vapor degrease. **WARNING** Solvent vapors are toxic. Avoid inhalation of vapors or contact with skin or clothing.	1 min	ASTM D4081 and ASTM D4376 (Tetrachloroethylene) Alternates:	120 – 124	248 – 256
			ASTM D4080 (Trichloroethylene) **NOTE** Not to be used where prohibited by state regulations.	88 – 90	187 – 194
14	Preserve with corrosion prevention compound.	As Req'd	MIL-PRF-16173, Grade 3 Alternates:	Room	Room
			MIL-C-82594	Room	Room
			MIL-PRF-32033	Room	Room

CHAPTER 12
NICKEL ELECTRODEPOSITION

12.1 PURPOSE.

This chapter provides instructions for the electrodeposition of nickel. The resulting coating shall meet or exceed the requirements of Specification SAE AMS-QQ-N-290. Plating on high strength steels shall meet the requirements of MIL-STD-868.

12.2 GENERAL.

a. Nickel is an attractive, ductile, high luster metal with many engineering and decorative applications. It is easily buffed to a high luster, exhibits good corrosion and abrasion resistance, and is readily machined. Nickel, because of its combined physical and chemical properties, is the most popular and useful metallic coating.

b. Thin nickel coatings are used mainly for corrosion protection in most environments; prevention of contamination in the food industry; undercoatings for subsequent plated deposits in the engineering field: and decorative purposes in the commercial industry. Heavy nickel deposits are used primarily for combined corrosion and wear resistance, salvage of worn or corroded parts, and electroforming.

12.3 PLATING APPLICATION.

Unless otherwise specified, the basis metal shall be free from visible defects that will be detrimental to the appearance or protective value of the plating. The plating shall be applied after all basis metal heat treatments and mechanical operations such as machining, brazing, welding, forming, and perforating of the article have been completed.

12.4 UNDERPLATING.

Unless otherwise specified, nickel shall be deposited directly on the basis metal without a preliminary plating of other metal except in the case of (1) corrosion resistant steel on which a preliminary coating of nickel from a Woods bath is permissible; or for (2) corrosion protection when a preliminary coating of copper is permissible; or (3) on aluminum parts on which a preliminary zincate process followed by necessary strike coatings is permissible. In no case shall any underplate be substituted for any part of the specified nickel thickness.

12.5 PLATING.

The nickel plating shall be smooth, fine-grained, adherent, uniform in appearance, free from blisters, pits, nodules, excessive edge build-up, and other defects. The plating shall show no indication of contamination or improper operation of equipment used to produce the nickel deposit, such as excessively powdered or darkened plating, build-up, and other defects. The size and number of contact marks shall be at a minimum consistent with good practice. The location of contact marks shall be in areas of minimum exposure to service environmental conditions where important to the function of the part. Superficial staining which has been demonstrated as resulting from rinsing, or slight discoloration resulting from baking operations to relieve embrittlement shall not be cause for rejection. All details of workmanship shall conform to the best practice for high quality plating.

12.6 EQUIPMENT.

12.6.1 Tank Construction. Nickel plating tanks are usually made of steel and lined with vinyl, hard rubber, natural rubber, or neoprene. All these linings are non-conductive and are relatively easy to apply.

12.6.2 Ventilation. The plating tank shall be equipped with a positive ventilation system capable of meeting or exceeding the ventilation requirements of AFOSHSTD 48-2.

12.6.3 Filtration. Continuous filtration should be provided to the plating solution. Rate of filtration should be sufficient to provide at least two complete turnovers of solution per hour.

12.6.4 Agitation. Agitation is necessary to prevent gas accumulations on the surface of parts being plated. This can be done by mechanical movement of parts or by solution movement. Air agitation may be used but must be entirely free from oil, grease, dirt, and other contaminants, and if employed, bath wetting agents must be compatible.

12.6.5 Anodes.

a. The anode system consists of (1) chilled-cast anodes, (2) rolled anodes, or (3) perforated titanium anode baskets filled with small pieces of electrolytic nickel suspended in bags, or (4) of auxiliary conforming anodes connected to the positive terminal of the power supply. The titanium anode baskets are the most popular for biweekly additions to the baskets, the anode area can remain constant.

b. Nickel anodes conforming to commercially equivalent products under NSNs 3426-00-088-9069 and 3426-00-088-9070 with a purity of 99 +% nickel

will be used. All nickel anodes when dissolving, leave an insoluble brown to black residue which migrates to the cathode resulting in nodular plated deposits. The trouble is overcome by bagging the anodes in desized cotton plastic fabrics. The bags must be frequently removed and cleaned to prevent decreased anode activity due to sludge build-up within the bag. Anode to cathode area should be maintained at a 1:1 ratio.

12.6.6 Power Source. Electrodeposition requires Direct Current (DC) which can be supplied from either generators or rectifiers. Most plating solutions operate between 0 and 14 volts. However if plating is to be done on large parts at high current densities and with large anode-cathode distances, increased voltage may be necessary. Ripple value as measured with a true RMS voltmeter connected across the anode and cathode buss at the tank shall not exceed 10% of the DC operating voltage. Power sources will be certified semi-annually. Certification shall include a check of ripple, proper functioning of controls, and accuracy of all meters, counters, and timers which are integral parts of the power source.

12.7 BATH CHARACTERISTICS.

WARNING

Many plating solutions produce toxic mist and vapors, some of which are cumulative in nature. Therefore, precautions should be taken to avoid inhalation of fumes and any contact with skin or clothing.

a. The electrolytic nickel plating solution is composed of nickel sulfate, nickel chloride, boric acid, and anti-pitting agents.

b. The bath operates between 46 – 54°C (115 – 130°F) and at a current density of 2.7 – 8 A/dm^2 (25 – 75 ASF). It has high covering and throwing power. The cathode efficiency is between 95 – 100%. The bath is very versatile and such properties as hardness, ductility, brightness, buffability, machinability, strength, and grain size can be changed by altering the variables of the bath. Initially the bath must be carefully prepared and the pH adjusted. If raw materials are used in the make-up, the solution must be purified before use. Purification is accomplished by high pH treatment, peroxide treatment, electrolytic purification, and carbon treatment. If nickel sulfamate concentrate is used, the purification can be eliminated. The pH of the solution should be controlled within ± 0.5 pH units to maintain desired characteristics.

c. The nickel content of the solution can usually be regulated by anode corrosion. Anode corrosion and anode depolarization are brought on by the chloride content in the solution.

d. Hard nickel deposits may be obtained by the addition of saccharin or p-Toluene sulfonamide and bright nickel deposits may be obtained by the addition of inorganic brighteners such as cobalt, zinc, and cadmium.

e. Wetting agents (sodium laurel sulfate, etc.) are added to lower the surface tension of the solution and eliminate pitting of plated deposits, and compounds such as thiourea are added for leveling purposes.

Table 12-1. Nickel Stripping Procedure

Step	Operation	Time	Solutions, Materials, and Current	Temp °C	Temp °F
1	Vapor degrease. **WARNING** Solvent vapors are toxic. Avoid inhalation of vapors or contact with skin or clothing.	As Req'd	ASTM D4081 and ASTM D4376 (Tetrachloroethylene) Alternates:	120 – 124	248 – 256
			ASTM D4080 (Trichloroethylene) **NOTE** Not to be used where prohibited by state regulations.	88 – 90	187 – 194
2	Mask for stripping if necessary.	As Req'd			

Table 12-1. Nickel Stripping Procedure - Continued

Step	Operation	Time	Solutions, Materials, and Current	Temp °C	Temp °F
3	Strip old plating.	As Req'd	From Steel C-106 Immersion Only Alternates:	49 – 54	120 – 130
			C-121 2 volts Anodic	21 – 27	70 – 80
			Enstrip N-190 Nickel Stripper conc: 20% vol N-190A 6 oz/gal N-190B Available from: Enthone Inc. P.O. Box 1900 New Haven, CT 06508	49 – 54	120 – 130
			From Aluminum or Stainless Alloys C-120 Immersion Only	21 – 27	70 – 80
			From Bronze or Copper Alloys C-120 2 volts Anodic Alternates:	21 – 27	70 – 80
			C-106 Immersion Only	49 – 54	120 – 130
4	Rinse.	As Req'd	Water	Rm – 82	Rm – 180
5	Examine for completeness of strip. Repeat Steps 3 through 5 if necessary.	As Req'd			
6	Remove masking.	As Req'd			
7	Rinse.	As Req'd	Water	49 – 82	120 – 180
8	Dry.	As Req'd	Shop Air	Room	Room
9	Preserve ferrous parts with corrosion prevention compound if necessary.	As Req'd	MIL-PRF-16173, Grade 3 Alternates:	Room	Room
			MIL-C-82594	Room	Room
			MIL-PRF-32033	Room	Room

Table 12-2. Nickel Electrodeposition on Aluminum Alloys

Step	Operation	Time	Solutions, Materials, and Current	Temp °C	Temp °F
1	Strip anodize coating if necessary.	As Req'd	C-116 Immersion Only Alternates:	71 – 82	160 – 180
			C-137 Immersion Only	82 – 100	180 – 212
2	Prepare part for plating.	As Req'd	Table 2-2		
3	Alkaline clean.	1 – 2 min	C-202 Immersion Only Alternates:	52 – 57	125 – 135
			C-205 Immersion Only	52 – 57	125 – 135
4	Rinse.	30 – 60 sec	Water	Room	Room
5	Etch.	10 – 30 sec	C-311 Immersion Only	Room	Room
6	Rinse.	30 – 60 sec	Water	Room	Room
7	Etch.	10 – 30 sec	C-316 Immersion Only Alternates:	Room	Room
			C-304 Immersion Only	Room	Room
8	Rinse. Use vigorous agitation.	30 – 60 sec	Water	Room	Room
9	Zincate. Use vigorous agitation.	30 sec	C-410 Immersion Only	21 – 24	70 – 75
10	Remove Zincate.	5 – 20 sec	C-311 Immersion Only Alternates:	Room	Room
			C-310 Immersion Only	Room	Room
11	Rinse. Use vigorous agitation.	30 – 60 sec	Water	Room	Room
12	Etch.	10 – 30 sec	C-316 Immersion Only Alternates:	Room	Room
			C-304 Immersion Only	Room	Room
13	Rinse. Use vigorous agitation.	30 – 60 sec	Water	Room	Room
14	Zincate. Use vigorous agitation.	30 – 60 sec	C-410 Immersion Only	Room	Room
15	Rinse. Use vigorous agitation.	30 – 60 sec	Water	Room	Room
16	(OPTIONAL STEP) Copper strike.	4 – 7 min	C-472 Use 2.6 A/dm^2 (24 ASF) for 2 minutes, then reduce to 1.3 A/dm^2 (12 ASF) for remainder of strike time.	38 – 54	100 – 130

Table 12-2. Nickel Electrodeposition on Aluminum Alloys - Continued

Step	Operation	Time	Solutions, Materials, and Current	Temp °C	Temp °F
	Current to be ON when immersing or withdrawing part.				
17	Rinse.	30 – 60 sec	Water	Room	Room
18	Nickel plate. Current to be ON when immersing parts.	As Req'd	C-412 2.7 – 8 A/dm^2 (25 – 75 ASF) Alternates:	46 – 54	115 – 130
			C-414 2.7 – 8 A/dm^2 (25 – 75 ASF)	46 – 54	115 – 130
			C-421 2.2 – 10.8 A/dm^2 (20 – 100 ASF)	46 – 54	115 – 130
19	Rinse.	As Req'd	Water	Rm – 82	Rm – 180
20	Dry.	As Req'd	Shop Air	Room	Room
21	Remove masking.	As Req'd			
22	Inspect nickel deposit. **NOTE** An acceptable nickel deposit shall be smooth, fine-grained, adherent, uniform in appearance, free from blisters, pits, nodules, excessive edge build-up, and other imperfections. Superficial staining shall not be cause for rejection.	As Req'd			
23	Bake unless otherwise specified on individual part.	3 hrs MIN		191 ± 14	375 ± 25
24	Reinspect plated deposit.	As Req'd			
25	Preserve with corrosion prevention compound if necessary.	As Req'd	MIL-PRF-16173, Grade 3 Alternates:	Room	Room
			MIL-C-82594	Room	Room
			MIL-PRF-32033	Room	Room

Table 12-3. Nickel Electrodeposition on Steel

Step	Operation	Time	Solutions, Materials, and Current	Temp °C	Temp °F
1	Stress relieve all parts which have been machined, ground, cold-formed, or cold-straightened.	3 hrs MIN		191 ± 14	375 ± 25
2	Prepare part for plating.	As Req'd	Table 2-2		
3	Alkaline clean. Current to be OFF when immersing or withdrawing parts.	1 – 3 min	C-201 3 – 6 Volts Anodic Alternates:	52 – 57	125 – 135
			C-203 or C-210 3 – 6 Volts Anodic	52 – 57	125 – 135
			C-204 3 – 6 Volts Periodic reverse cycle, 10 sec anodic, 10 sec cathodic. End on anodic cycle.	52 – 57	125 – 135
4	Rinse.	15 – 60 sec	Water	Room	Room
5	Etch.	½ – 2 min	C-302 Immersion Only Alternates:	Room	Room
			C-301 Immersion Only	Room	Room
			C-308 21.5 A/dm^2 (200 ASF) Anodic	Room	Room
			C-315 Immersion Only	Room	Room
6	Rinse.	15 – 60 sec	Water	Room	Room
7	Nickel plate. Current to be ON when immersing parts.	As Req'd	C-412 2.7 – 8 A/dm^2 (25 – 75 ASF) Alternates:	46 – 54	115 – 130
			C-414 2.7 – 8 A/dm^2 (25 – 75 ASF)	46 – 54	115 – 130
			C-421 2.2 – 10.8 A/dm^2 (25 – 75 ASF)	46 – 54	115 – 130
8	Rinse.	As Req'd	Water	Rm – 82	Rm – 180
9	Remove masking.	As Req'd			

Table 12-3. Nickel Electrodeposition on Steel - Continued

Step	Operation	Time	Solutions, Materials, and Current	Temp °C	Temp °F
10	Inspect plated deposit. **NOTE** An acceptable nickel deposit shall be smooth, fine-grained, adherent, uniform in appearance, free from blisters, pits, nodules, excessive edge build-up, and other defects. Superficial staining shall not be cause for rejection.	As Req'd			
11	Bake as required. Less than RC 40. RC 40 or above. **NOTE** Embrittlement relief will be initiated within 4 hours of plating. If multiple plating is required, intermediate bakes of 4 hours may be done with the 23-hour bake after the final plating operation.	MIN Time — 3 hrs		191 ± 14	375 ± 25
12	Reinspect nickel deposit.	As Req'd			
13	Preserve ferrous parts with corrosion prevention compound.	As Req'd	MIL-PRF-16173, Grade 3 Alternates:	Room	Room
			MIL-C-82594	Room	Room
			MIL-PRF-32033	Room	Room

Table 12-4. Nickel Electrodeposition on Stainless Steel, Cobalt, and Nickel Base Alloys

Step	Operation	Time	Solutions, Materials, and Current	Temp °C	Temp °F
1	Stress relieve all parts which have been machined, ground, cold-formed, or cold-straightened.	3 hrs MIN		191 ± 14	375 ± 25
2	Prepare part for plating.	As Req'd	Table 2-2		
3	Alkaline clean. Current to be OFF when immersing or withdrawing parts.	1 – 3 min	C-201 3 – 6 Volts Anodic Alternates:		
			C-203 or C-210 3 – 6 Volts Anodic	52 – 57	125 – 135
			C-204 3 – 6 Volts Periodic reverse cycle, 10 sec anodic, 10 sec cathodic. End on anodic cycle.	52 – 57	125 – 135
4	Rinse.	15 – 60 sec	Water	Room	Room
5	Etch. **NOTE** If smut is present after etch operation, repeat Steps 3 through 5 and eliminate current on Step 5.	15 – 60 sec	C-302 Immersion Only Alternates:	Room	Room
			C-304 Immersion or 10.5 A/dm^2 (100 ASF) Anodic	Room	Room
			C-306 10.5 A/dm^2 (100 ASF) Anodic	Room	Room
			C-309 21.5 A/dm^2 (200 ASF) Anodic	Room	Room
			C-315 Immersion Only	Room	Room
6	Rinse.	15 – 60 sec	Water	Room	Room
7	Nickel strike. Current to be ON when immersing or withdrawing parts.	4 – 6 min	C-403 3.8 – 8 A/dm^2 (35 – 75 ASF)	Room	Room
8	Rinse.	15 – 60 sec	Water	Room	Room

Table 12-4. Nickel Electrodeposition on Stainless Steel, Cobalt, and Nickel Base Alloys - Continued

Step	Operation	Time	Solutions, Materials, and Current	Temp °C	Temp °F
9	Nickel plate. Current to be ON when immersing parts.	As Req'd	C-412 2.8 – 8 A/dm^2 (25 – 75 ASF) Alternates:	46 – 54	115 – 130
			C-414 2.8 – 8 A/dm^2 (25 – 75 ASF)	46 – 54	115 – 130
			C-421 2.2 – 10.8 A/dm^2 (20 – 100)	46 – 54	115 – 130
10	Rinse.	As Req'd	Water	Rm – 82	Rm – 180
11	Dry.	As Req'd	Shop Air	Room	Room
12	Remove masking.	As Req'd			
13	Inspect plated deposit. **NOTE** An acceptable nickel deposit shall be smooth, fine-grained, adherent, uniform in appearance, free from blisters, pits, nodules, excessive edge build-up, and other imperfections. Superficial staining shall not be cause for rejection.	As Req'd			
14	Bake as required. Less than RC 40. RC 40 or above. **NOTE** • Embrittlement relief will be initiated within 4 hours after plating. • If multiple plating is required, intermediate bakes of 4 hours may be done with the 23 hour bake after the final plating operation.	MIN Time — 3 hrs		191 ± 14	375 ± 25
15	Reinspect plated deposit.	As Req'd			

Table 12-4. Nickel Electrodeposition on Stainless Steel, Cobalt, and Nickel Base Alloys - Continued

Step	Operation	Time	Solutions, Materials, and Current	Temp °C	Temp °F
16	Preserve with corrosion prevention compound if necessary.	As Req'd	MIL-PRF-16173, Grade 3 Alternates:	Room	Room
			MIL-C-82594	Room	Room
			MIL-PRF-32033	Room	Room

Table 12-5. Nickel Electrodeposition on High Strength Steel in Accordance with MIL-STD-868

Step	Operation	Time	Solutions, Materials, and Current	Temp °C	Temp °F
1	Stress relieve all parts.	4 hrs MIN		191 ± 14	375 ± 25
2	Shot-peen all parts in accordance with SAE AMS-S-13165.				
3	Prepare part for plating.	As Req'd	Table 2-2		
4	Alkaline clean. Current to be OFF when immersing or withdrawing parts.	1 – 3 min	C-201 3 – 6 volts Anodic Alternates:	52 – 57	125 – 135
			C-203 C-204 or C-210 3 – 6 Volts Anodic	52 – 57	125 – 135
5	Rinse.	15 – 60 sec	Water	Room	Room
6	Etch.	10 – 30 sec	C-315 Immersion Only	Room	Room
7	Rinse.	15 – 60 sec	Water	Room	Room
8	Nickel plate. Current to be ON when immersing parts.	As Req'd	C-412 3.2 – 5.4 A/dm^2 (30 – 50 ASF) Alternates:	46 – 54	115 – 130
			C-421 3.2 – 5.4 A/dm^2 (30 – 50 ASF)	46 – 54	115 – 130
			C-414 2.7 – 8 A/dm^2 (25 – 75 ASF)	46 – 54	115 – 130
9	Rinse.	As Req'd	Water	Rm – 82	Rm – 180
10	Dry.	As Req'd	Shop Air	Room	Room
11	Remove masking.	As Req'd			

Table 12-5. Nickel Electrodeposition on High Strength Steel in Accordance with MIL-STD-868 - Continued

Step	Operation	Time	Solutions, Materials, and Current	Temp °C	Temp °F
12	Inspect plated deposit. **NOTE** An acceptable nickel deposit shall be smooth, fine-grained, adherent, uniform appearance, continuous, and free from blisters, pits, nodules, excessive edge build-up, and other harmful defects. Superficial staining resulting from rinsing or baking operation shall not be cause for rejection.	As Req'd			
13	Bake all parts. **NOTE** Embrittlement relief will be initiated within 4 hours of plating. If multiple plating is required, intermediate bakes of 4 hours may be done with the 23-hour bake after the final plating operation.	23 hrs MIN		191 ± 14	375 ± 25
14	Reinspect nickel deposit.	As Req'd			
15	Preserve with corrosion prevention compound if necessary.	As Req'd	MIL-PRF-16173, Grade 3 Alternates:	Room	Room
			MIL-C-82594	Room	Room
			MIL-PRF-32033	Room	Room

Table 12-6. Nickel Electrodeposition on Copper and Copper Base Alloys

Step	Operation	Time	Solutions, Materials, and Current	Temp °C	Temp °F
1	Prepare for plating.	As Req'd	Table 2-2 C-201 3 – 6 volts Cathodic	52 – 57	125 – 135
2	Alkaline clean. Current to be OFF during immersion or withdrawal of part.	30 – 90 sec	C-203 3 – 6 volts Cathodic	52 – 57	125 – 135
3	Rinse.	15 – 60 sec	Water	Room	Room
4	Acid dip.	20 – 30 sec	C-301	Room	Room
5	Rinse.	15 – 60 sec	Water	Room	Room
6	Copper strike. Current to be ON during immersion or withdrawal of part.	3 – 5 min	C-411 1.6 – 4.8 A/dm^2 (15 – 45 ASF)	49 – 54	120 – 130
7	Nickel strike.	4 – 8 min	C-403 3.8 – 7.5 A/dm^2 (35 – 70 ASF)	Room	Room
8	Rinse.	15 – 60 sec	Water	Room	Room
9	Nickel plate. Current to be ON when immersing part.	As Req'd	C-412 2.7 – 8 A/dm^2 (25 – 75 ASF) Alternates:	46 – 54	115 – 130
			C-414 2.7 – 8 A/dm^2	46 – 54	115 – 130
10	Rinse.	15 – 60 sec	Water	Room	Room
11	Remove masking.	As Req'd			
12	Inspect deposit. **NOTE** An acceptable nickel deposit shall be smooth, adherent, fine-grained, uniform in appearance, free from blisters, pits, nodules, excessive edge build-up, and other imperfections. Superficial staining shall not be cause for rejection.	As Req'd			
13	Bake as required.	MIN Time			

Table 12-6. Nickel Electrodeposition on Copper and Copper Base Alloys - Continued

Step	Operation	Time	Solutions, Materials, and Current	Temp °C	Temp °F
	Less than RC 40. RC 40 or above. **NOTE** Embrittlement relief will be initiated within four hours of plating.	— 3 hrs		191 ± 14	375 ± 25
14	Reinspect plated deposit.	As Req'd			
15	Preserve with corrosion prevention compound if necessary.	As Req'd	MIL-PRF-16173, Grade 3 Alternates:	Room	Room
			MIL-C-82594, Grade 3	Room	Room
			MIL-PRF-32033	Room	Room

Table 12-7. Plating Speed at 95% Cathode Efficiency

Average Thickness in Inches	A/dm^2 (ASF)						
	1.1 (10)	2.2 (20)	3.2 (30)	4.3 (40)	5.4 (50)	6.5 (60)	7.5 (70)
0.00001	1.2	0.6	0.4	0.3	0.2	0.2	0.2
0.00002	2.4	1.2	0.8	0.6	0.5	0.4	0.3
0.00003	3.5	1.8	1.2	0.9	0.7	0.6	0.5
0.00004	4.7	2.4	1.6	1.2	0.9	0.8	0.7
0.00005	5.9	3.0	2.0	1.5	1.2	1.0	0.8
0.00006	7.1	3.5	2.4	1.8	1.4	1.2	1.0
0.00007	8.3	4.1	2.8	2.1	1.7	1.4	1.2
0.00008	9.4	4.7	3.1	2.4	1.9	1.6	1.3
0.00009	10.6	5.3	3.5	2.7	2.1	1.8	1.5
0.0001	11.8	5.9	3.9	3.0	2.4	2.0	1.7
0.0002	23.6	11.8	7.9	5.9	4.7	3.9	3.4
0.0003	35.4	17.7	11.8	8.9	7.1	5.9	5.1
0.0004	47.2	23.6	15.7	11.8	9.4	7.9	6.7
0.0005	59.0	29.5	19.7	14.8	11.8	9.8	8.4
0.0006	70.8	35.4	23.6	17.7	14.2	11.8	10.1
0.0007	82.6	41.3	27.5	20.7	16.5	13.8	11.8
0.0008	94.4	47.2	31.5	23.6	18.9	15.7	13.5
0.0009	106.2	53.1	35.4	26.6	21.2	17.7	15.2
0.001	118.0	59.0	39.3	29.5	23.6	19.7	16.9
0.002	236.0	118.0	78.7	59.0	47.2	39.3	33.7

Table 12-7. Plating Speed at 95% Cathode Efficiency - Continued

Average Thickness in Inches	A/dm² (ASF)						
	1.1 (10)	2.2 (20)	3.2 (30)	4.3 (40)	5.4 (50)	6.5 (60)	7.5 (70)
0.003	354.0	177.0	118.0	88.5	70.8	59.0	50.6
0.004	472.0	236.0	157.3	118.0	94.4	78.7	67.4
0.005	590.0	295.0	196.7	147.5	118.0	98.3	84.3
0.006	708.0	354.0	236.0	177.0	141.6	118.0	101.1
0.007	826.0	413.0	275.3	206.5	165.2	137.7	118.0
0.008	944.0	472.0	314.7	236.0	188.8	157.3	134.9
0.009	1062.0	531.0	354.0	265.5	212.4	177.0	151.7
0.010	1180.0	590.0	393.3	295.0	236.0	196.7	168.6
0.011	1298.0	649.0	432.7	324.5	259.6	216.3	185.4
0.012	1416.0	708.0	472.0	354.0	283.2	236.0	202.3
0.013	1534.0	767.0	511.3	383.5	306.8	255.7	219.1
0.014	1652.0	826.0	550.7	413.0	330.4	275.3	236.0
0.015	1770.0	885.0	590.0	442.5	354.0	295.0	252.9
0.016	1880.0	944.0	629.3	472.0	377.6	314.7	269.7
0.017	2006.0	1003.0	668.7	501.5	401.2	334.3	286.6
0.018	2124.0	1062.0	708.0	531.0	424.8	354.0	303.4
0.019	2242.0	1121.0	747.3	560.5	448.4	373.7	320.3
0.020	2360.0	1180.0	786.7	590.0	472.0	393.3	337.1
0.021	2478.0	1239.0	826.0	619.5	495.6	413.0	354.0
0.022	2596.0	1298.0	865.3	649.0	519.2	432.4	370.9
0.023	2714.0	1357.0	904.7	678.5	542.8	452.3	387.7
0.024	2832.0	1416.0	944.0	708.0	566.4	472.0	404.6
0.025	2950.0	1475.0	983.3	737.5	590.0	491.7	421.4
0.026	3068.0	1534.0	1022.7	767.0	613.6	511.3	438.3
0.027	3186.0	1593.0	1062.0	796.5	637.2	531.0	455.1
0.028	3304.0	1652.0	1101.3	826.0	660.8	550.7	472.0
0.029	3422.0	1711.0	1140.7	855.5	684.4	570.3	488.9
0.030	3540.0	1770.0	1180.0	885.0	708.0	590.0	505.7
	Time in Minutes						

CHAPTER 13
ELECTROLESS NICKEL PLATING

13.1 PURPOSE.

This chapter provides instruction for the nonelectrolytic deposition of nickel. The nickel coating shall meet or exceed the requirements of Specification SAE AMS-C-26074.

13.2 GENERAL.

a. Electroless nickel plating is an immersion process in which an autocatalytic chemical reduction is responsible for the nickel deposition rather than electrical current. The resulting plating is an alloy consisting of nickel, iron, and 3 – 12% phosphorous, and possesses somewhat different properties from the electrodeposited nickel.

b. The deposits range from semi-bright to bright, are relatively nonporous, brittle, and quite hard. Proper heat treatments cause the deposit to become ductile and will double the hardness to make it comparable to hard chromium in wear resistance (Rockwell C 70+).

c. Because the deposit is not dependent on current distribution, it is uniform in thickness, regardless of the shape and size of the items being plated. This characteristic makes electroless nickel a valuable coating for application to parts of complex and intricate shapes such as gears, valves, tubes, pump bodies, screws, etc., that cannot be satisfactorily and economically plated with the electrolytic nickel bath.

13.3 PLATING APPLICATION.

Unless otherwise specified:

a. The basis metal shall be free from visible defects that will be detrimental to the appearance or protective value of the plating.

b. The plating shall be applied after all basis metal heat treatments and mechanical operations such as machining, brazing, welding, forming, and perforating of the article have been completed.

c. All steel parts having an ultimate tensile strength of 220,000 psi or above shall not be coated without approval of the item manager.

13.4 UNDERPLATING.

Unless otherwise specified, nickel shall be deposited directly on the basis metal without a preliminary plating of other metal except in the case of (1) corrosion resistant steel on which a preliminary coating of nickel from a Woods bath is permissible; or for (2) corrosion protection when a preliminary coating of copper is permissible; or (3) on aluminum parts on which a preliminary zincate process followed by necessary strike coatings is permissible. In no case shall any underplate be substituted for any part of the specified nickel thickness.

13.5 PLATING.

The nickel deposit shall be smooth, adherent, uniform in appearance, and free from visible blisters, pits, nodules, cracks, and other defects harmful to the intended use of the part. All details of workmanship shall conform to the best practices for high quality coating.

13.6 EQUIPMENT.

13.6.1 Tank Construction. The plating tank is constructed of stainless steel or aluminum which is usually surrounded by a hot water jacket. The jacket is utilized to prevent localized hot spots that could cause solution decomposition and abnormal reduction of free nickel on the tank walls, or in the solution. The tanks are lined with an inert material such as tetrafluoroethylene, a phenolic base organic, Pyrex, or a thin disposable polyethylene or polypropylene liner. The tank size is dictated by the size and shape of the parts and should be held to a minimum size to conserve utilities and solution.

13.6.2 Ventilation. The plating tank shall be equipped with a positive ventilation system capable of meeting or exceeding the ventilation requirements of AFOSHSTD 48-2.

13.6.3 Filtration. The solution is usually made up in an auxiliary tank then pumped into the plating tank. The solution in the make-up tank should be filtered periodically, however, it is unnecessary to filter the plating solution unless it has been in the tank for a lengthy period. The filter system should be constructed of passivated stainless steel or plastic. Filter tubes should be constructed of polypropylene, polyethylene or other suitable material.

13.6.4 Agitation. Agitation of the parts or solution movement is needed to help dislodge gas bubbles, replenish solution in recesses, and decrease the concentration gradient of reactive components at the interfacial region. Vigorous agitation should be avoided as cessation of deposition may occur.

13.7 BATH CHARACTERISTICS.

a. The electroless nickel solution is composed of a nickel salt, to supply the metal; hypophosphite, to act as a reducing agent; and a salt, which acts as a buffer and a mild complexing agent for nickel. The solution being an inherently metastaple mixture is likely to spontaneously decompose with the nickel and hypophosphite reacting on the trace impurities in the solution. Therefore a POISON such as molybdenum trioxide is usually added, to be absorbed on the impurities, to destroy their catalytic action and stabilize the solution.

b. The bath operates at a temperature of 77 – 88°C (170 – 190°F) and at a pH of 5.2 – 5.6.

c. The rate of nickel deposition is dependent on the temperature, nickel and hypophosphite concentrations, and pH of the solution. As the nickel and hypophosphite are consumed, the deposition decreases until the bath is inoperable unless plating is limited to thin deposits or small parts. This utilization can continue until the solution is water white. At this point, the old solution is discarded, the tank thoroughly cleaned, and the solution replaced.

d. Increases in bath temperature accelerates the plating rate but the temperature must be closely controlled to prevent overheating which results in rapid solution decomposition.

Table 13-1. Electroless Nickel Stripping Procedure

Step	Operation	Time	Solutions, Materials, and Current	Temp °C	Temp °F
1	Vapor degrease. **WARNING** Solvent vapors are toxic. Avoid inhalation of vapors or contact with skin or clothing.	As Req'd	ASTM D4081 and ASTM D4376 (Tetrachloroethylene) Alternates:	120 – 124	248 – 256
			ASTM D4080 (Trichloroethylene) **NOTE** Not to be used where prohibited by state regulations.	88 – 90	187 – 194
2	Mask for stripping if necessary.	As Req'd			
3	Strip old plating.	As Req'd	From Steel C-106 Immersion Only Alternates:	49 – 54	120 – 130
			C-121 2 volts Anodic	21 – 27	70 – 80
			Chemisphere Nickel Stripper 2 – 3 lbs/gal Available from: Chemisphere Technologies P.O. Box 250 Booton, NJ 07005 From Aluminum or Stainless Alloys C-120 Immersion Only	49 – 65 21 – 27	120 – 150 70 – 80
			From Bronze or Copper Alloys C-120 2 volts Anodic Alternates:	21 – 27	70 – 80

Table 13-1. Electroless Nickel Stripping Procedure - Continued

Step	Operation	Time	Solutions, Materials, and Current	Temp °C	Temp °F
			C-106 Immersion Only Chemisphere Nickel Stripper 2 – 3 lbs/gal	49 – 54 49 – 65	120 – 130 120 – 150
4	Rinse.	As Req'd	Water	Rm – 82	Rm – 180
5	Examine for completeness of strip. Repeat Steps 3 through 5 if necessary.	As Req'd			
6	Remove masking.	As Req'd			
7	Rinse.	As Req'd	Water	49 – 82	120 – 180
8	Dry.	As Req'd	Shop Air	Room	Room
9	Preserve ferrous parts with corrosion prevention compound if necessary.	As Req'd	MIL-PRF-16173, Grade 3 Alternates:	Room	Room
			MIL-C-82594	Room	Room
			MIL-PRF-32033	Room	Room

Table 13-2. Electroless Nickel Deposition on Aluminum Alloys

Step	Operation	Time	Solutions, Materials, and Current	Temp °C	Temp °F
1	Strip anodize coating if necessary.	As Req'd	C-116 Immersion Only Alternates:	71 – 82	160 – 180
			C-137 Immersion Only	82 – 100	180 – 212
2	Prepare part for plating.	As Req'd	Table 2-2		
3	Alkaline clean.	1 – 2 min	C-202 Immersion Only Alternates:	52 – 57	125 – 135
			C-205 Immersion Only	52 – 57	125 – 135
4	Rinse.	30 – 60 sec	Water	Room	Room
5	Etch.	10 – 30 sec	C-311 Immersion Only	Room	Room
6	Rinse.	30 – 60 sec	Water	Room	Room
7	Etch.	10 – 30 sec	C-316 Immersion Only Alternates:	Room	Room

Table 13-2. Electroless Nickel Deposition on Aluminum Alloys - Continued

Step	Operation	Time	Solutions, Materials, and Current	Temp °C	Temp °F
			C-304 Immersion Only	Room	Room
8	Rinse. Use vigorous agitation.	30 – 60 sec	Water	Room	Room
9	Zincate. Use vigorous agitation.	30 sec	C-410 Immersion Only	21 – 24	70 – 75
10	Remove Zincate.	5 – 20 sec	C-311 Immersion Only Alternates:	Room	Room
			C-130 Immersion Only	Room	Room
11	Rinse. Use vigorous agitation.	30 – 60 sec	Water	Room	Room
12	Etch.	10 – 30 sec	C-316 Immersion Only Alternates:	Room	Room
			C-304 Immersion Only	Room	Room
13	Rinse. Use vigorous agitation.	30 – 60 sec	Water	Room	Room
14	Zincate. Use vigorous agitation.	30 – 60 sec	C-410 Immersion Only	Room	Room
15	Rinse. Use vigorous agitation.	30 – 60 sec	Water	Room	Room
16	(OPTIONAL STEP) Copper strike. Current to be ON when immersing or withdrawing part.	4 – 7 min	C-472 Use 2.6 A/dm^2 (24 ASF) for 2 minutes, then reduce to 1.3 A/dm^2 (12 ASF) for remainder of strike time.	38 – 54	100 – 130
17	(OPTIONAL STEP) Nickel strike. Current to be ON when immersing or withdrawing part.	4 – 7 min	C-471 2.5 A/dm^2 (23 ASF)	21 – 38	70 – 100
18	Rinse.	30 – 60 sec	Water	Room	Room
19	Nickel plate.	As Req'd	C-430 Immersion Only	77 – 88	170 – 190
20	Rinse.	As Req'd	Water	Rm – 82	Rm – 180
21	Dry.	As Req'd	Shop Air	Room	Room
22	Remove masking.	As Req'd			

Table 13-2. Electroless Nickel Deposition on Aluminum Alloys - Continued

Step	Operation	Time	Solutions, Materials, and Current	Temp °C	Temp °F
23	Inspect nickel deposit. **NOTE** An acceptable nickel deposit shall be smooth, fine-grained, adherent, uniform in appearance, free from blisters, pits, nodules, excessive edge build-up, and other imperfections. Superficial staining shall not be cause for rejection.	As Req'd			
24	Bake unless otherwise specified on individual part. Class 3 For aluminum alloys other than 7075 and Beryllium alloys.	1 – 1.5 hrs		143 – 182	290 – 360
	Class 3 7075 aluminum alloys. **NOTE** • Embrittlement relief will be initiated within 4 hours of plating. • If multiple plating is required, intermediate bakes of 4 hours may be done with the 23 hour bake after the final plating operation.	1 – 1.5 hrs		116 – 127	240 – 260
25	Reinspect plated deposit.	As Req'd			
26	Preserve with corrosion prevention compound if necessary.	As Req'd	MIL-PRF-16173, Grade 3 Alternates:	Room	Room
			MIL-C-82594	Room	Room
			MIL-PRF-32033	Room	Room

Table 13-3. Electroless Nickel Deposition on Steel

Step	Operation	Time	Solutions, Materials, and Current	Temp °C	Temp °F
1	Stress relieve all parts which have been machined, ground, cold-formed, or cold-straightened.	3 hrs MIN		191 ± 14	375 ± 25
2	Prepare part for plating.	As Req'd	Table 2-2		
3	Alkaline clean. Current to be OFF when immersing or withdrawing parts.	1 – 3 min	C-201 3 – 6 Volts Anodic Alternates:	52 – 57	125 – 135
			C-203 3 – 6 Volts Anodic	52 – 57	125 – 135
			C-204 3 – 6 Volts Periodic reverse cycle, 10 sec anodic, 10 sec cathodic. End on anodic cycle.	52 – 57	125 – 135
4	Rinse.	15 – 60 sec	Water	Room	Room
5	Etch.	½ – 2	C-302 Immersion Only Alternates:	Room	Room
			C-301 Immersion Only	Room	Room
			C-308 21.5 A/dm^2 (200 ASF) Anodic	Room	Room
			C-315 Immersion Only	Room	Room
6	Rinse.	15 – 60 sec	Water	Room	Room
7	Nickel plate.	As Req'd	C-430 Immersion Only	77 – 88	170 – 190
8	Rinse.	As Req'd	Water	Rm – 82	Rm – 180
9	Remove masking.	As Req'd			
10	Inspect plated deposit. **NOTE** An acceptable nickel deposit shall be smooth, fine-grained, adherent, uniform in appearance, free from blisters, pits, nodules, excessive edge build-up, and other defects. Superficial staining shall not be cause for rejection.	As Req'd			

Table 13-3. Electroless Nickel Deposition on Steel - Continued

Step	Operation	Time	Solutions, Materials, and Current	Temp °C	Temp °F
11	Bake as required. Class 1 coating.	MIN Times —			
	Class 2 coating for steel parts.	16 hrs or		232 ± 14	450 ± 25
		2 hrs or		260 ± 14	500 ± 25
		1 hr or		288 ± 14	550 ± 25
		½ hr		343 ± 14	650 ± 25
	Class 2 coating for nickel, copper, cobalt, and titanium based alloys.	1 – 1.5 hrs		343 ± 6	650 ± 10
	Class 3 For aluminum alloys other than 7075 and Beryllium alloys.	1 – 1.5 hrs		143 – 182	290 – 360
	Class 3 7075 aluminum alloys. **NOTE** • Embrittlement relief will be initiated within 4 hrs of plating. • If multiple plating is required, intermediate bakes of 4 hours may be done with the 23 hour bake after the final plating operation.	1 – 1.5 hrs		116 – 127	240 – 260
12	Reinspect nickel deposit.	As Req'd			
13	Preserve ferrous parts with corrosion prevention compound.	As Req'd	MIL-PRF-16173, Grade 3 Alternates:	Room	Room
			MIL-C-82594	Room	Room
			MIL-PRF-32033	Room	Room

Table 13-4. Electroless Nickel Deposition on Corrosion Resistant Steel, High Strength Steel (over 180,000 psi), Cobalt, and Nickel Base Alloys

Step	Operation	Time	Solutions, Materials, and Current	Temp °C	Temp °F
1	Stress relieve all parts that have been machined, ground, cold-formed, or cold-straightened.	3 hrs MIN		191 ± 14	375 ± 25
2	Prepare part for plating.	As Req'd	Table 2-2		
3	Alkaline clean. Current to be OFF when immersing or withdrawing parts.	1 – 3 min	C-201 3 – 6 Volts Anodic Alternates:	52 – 57	125 – 135
			C-203 3 – 6 Volts Anodic	52 – 57	125 – 135
			C-204 3 – 6 Volts Periodic reverse cycle, 10 sec anodic, 10 sec cathodic. End on anodic cycle.	52 – 57	125 – 135
4	Rinse.	15 – 60 sec	Water	Room	Room
5	Etch. **NOTE** If smut is present after etch operation, repeat Steps 3 through 5 and eliminate current on Step 5.	15 – 60 sec	C-302 Immersion Only Alternates:	Room	Room
			C-304 Immersion or 10.5 A/dm^2 (100 ASF) Anodic	Room	Room
			C-306 10.5 A/dm^2 (100 ASF) Anodic	Room	Room
			C-309 21.5 A/dm^2 (200 ASF) Anodic	Room	Room
			C-315 Immersion Only	Room	Room
6	Rinse.	15 – 60 sec	Water	Room	Room
7	Nickel strike. Current to be ON when immersing or withdrawing parts.	4 – 6 min	C-403 3.8 – 8 A/dm^2 (35 – 75 ASF)	Room	Room
8	Rinse.	15 – 60 sec	Water	Room	Room
9	Nickel plate.	As Req'd	C-430 Immersion Only	77 – 88	170 – 190

Table 13-4. Electroless Nickel Deposition on Corrosion Resistant Steel, High Strength Steel (over 180,000 psi), Cobalt, and Nickel Base Alloys - Continued

Step	Operation	Time	Solutions, Materials, and Current	Temp °C	Temp °F
10	Rinse.	As Req'd	Water	Rm – 82	Rm – 180
11	Dry.	As Req'd	Shop Air	Room	Room
12	Remove masking.	As Req'd			
13	Inspect plated deposit. **NOTE** An acceptable nickel deposit shall be smooth, fine-grained, adherent, uniform in appearance, free from blisters, pits, nodules, excessive edge build-up, and other imperfections. Superficial staining shall not be cause for rejection.	As Req'd			
14	Bake. **NOTE** • Embrittlement relief will be initiated within 4 hours after plating. • If multiple plating is required, intermediate bakes of 4 hours may be done with the 23 hour bake after the final plating operation. • High Strength steel should be baked for 23 hours.	1 – 1.5 hrs MIN		343 ± 6	650 ± 10
15	Reinspect plated deposit.	As Req'd			
16	Preserve with corrosion prevention compound if necessary.	As Req'd	MIL-PRF-16173, Grade 3 Alternates:	Room	Room
			MIL-C-82594	Room	Room
			MIL-PRF-32033	Room	Room

Table 13-5. Electroless Nickel Deposition on Titanium Alloys

Step	Operation	Time	Solutions, Materials, and Current	Temp °C	Temp °F
1	Alkali clean.	1.5 – 2.5 min	C-201 Alternates:	43 – 99	110 – 210
			C-203	43 – 54	110 – 130
2	Rinse.	15 – 60 sec	Water	Room	Room
3	Immerse in stripping solution until coating is removed (gassing ceases). **CAUTION** Do not use this acid stripping solution for any other stripping purpose.	As Req'd	C-108	Room	Room
4	Rinse.	15 – 60 sec	Water	Room	Room
5	(OPTIONAL OPERATION) Neutralize is alkali solution.	30 – 90 sec	C-201 or C-204	Room	Room
6	(OPTIONAL OPERATION) Clean water rinse.	15 – 60 sec	Water	Room	Room
7	(OPTIONAL OPERATION) Rinse.	15 – 60 sec	Water	85	185
8	Air dry.	60 – 90 sec	Shop Air		
9	Mask as required.	5 – 20 min	Turco 5580G maskant		
10	Wet abrasive blast areas to be plated.	As Req'd			
11	Immerse parts in distilled or deionized water immediately after blasting. Check blasted areas for uniform matte finish. Move to next operation immersed in distilled or deionized water. Start next operation within one hour.	As Req'd	Distilled or deionized water	Room	Room

Table 13-5. Electroless Nickel Deposition on Titanium Alloys - Continued

Step	Operation	Time	Solutions, Materials, and Current	Temp °C	Temp °F
12	Immerse parts in hydrochloric acid solution. About 3 min after gassing starts. **CAUTION** • If this operation is not started within one hour after completing Operation 11, repeat Operations 10 and 11. • Do not water rinse after completing this operation.	About 3 min	C-138	Room	Room
13	Immerse parts in Rochelle salt solution. **CAUTION** Do not water rinse after completing this operation. Proceed to next operation without allowing parts to dry.	30 – 90 sec	C-468	Room	Room
14	Immerse in copper strike solution. Current to be OFF when immersing and withdrawing parts.	12 – 18 sec	C-469 at 0.13 – 0.15 amps/sq in	46 – 52	115 – 125
15	Rinse in distilled or deionized water. Do not allow parts to dry.	20 – 40 min	Distilled or deionized water	Room	Room
16	Immerse in electroless nickel plating solution. Make cathodic and apply one volt to activate. Discontinue the current as soon as the parts start gassing.	As Req'd *	C-430	88 – 99	190 – 210
17	Clean water rinse.	15 – 45 sec	Water	Room	Room
18	Water rinse.	15 – 45 sec	Water	80 – 90	176 – 194
19	Air dry.	60 – 90 sec	Shop Air		
20	Remove masking. Remove masking residue by wiping with a cloth wet with toluene.	As Req'd	Toluene	Room	Room

Table 13-5. Electroless Nickel Deposition on Titanium Alloys - Continued

Step	Operation	Time	Solutions, Materials, and Current	Temp °C	Temp °F
21	Check for uniformity of finish.	As Req'd			
22	Bake plate.	60 min	Air	393 – 404	740 – 760
* To control plating for required thickness, plate parts and measure, at approximate intervals, the thickness of the plate on the panels.					

Table 13-6. Electroless Nickel Deposition on Copper and Copper Base Alloys

Step	Operation	Time	Solutions, Materials, and Current	Temp °C	Temp °F
1	Prepare for plating.	As Req'd	Table 2-2	As Req'd	As Req'd
2	Alkaline clean. Current to be OFF during immersion or withdrawal of part.	20 – 90 sec	C-201 (3 – 6 Volts cathodic) Alternates:	52 – 57	125 – 135
			C-203 (3 – 6 Volts cathodic)		
3	Rinse.	15 – 60 sec	Water	Room	Room
4	Acid dip.	20 – 30 sec	C-301	Room	Room
5	Rinse.	15 – 60 sec	Water	Room	Room
6	Nickel strike. Current to be ON during immersion or withdrawal of part.	3 – 5 min	C-403 (3.8 – 7.5 A/dm^2 35 – 70 ASF)	Room	Room
7	Rinse.	15 – 60 sec	Water	Room	Room
8	Electroless nickel plate.	As Req'd	C-430	As Req'd	As Req'd
9	Rinse.	15 – 60 sec	Water	Room	Room
10	Dry.	As Req'd	Shop Air	Room	Room
11	Remove masking.	As Req'd			

Table 13-6. Electroless Nickel Deposition on Copper and Copper Base Alloys - Continued

Step	Operation	Time	Solutions, Materials, and Current	Temp °C	Temp °F
12	Inspect deposit. **NOTE** An acceptable nickel deposit shall be smooth, adherent, fine-grained, uniform in appearance, free from blisters, pits, nodules, excessive edge build-up, and other imperfections. Superficial staining shall not be cause for rejection.	As Req'd			

CHAPTER 14
NICKEL-CADMIUM ELECTRODEPOSITION

14.1 PURPOSE.

This chapter provides instructions for application of a diffused nickel-cadmium coating. The nickel plating shall meet the requirements of Specification SAE AMS-QQ-N-290 and the cadmium plating shall meet the requirements of Specification SAE AMS-QQ-P-416.

14.2 GENERAL.

Nickel-cadmium is an alloy produced by applying a cadmium deposit over a nickel deposit then baking to diffuse the deposits. The purpose of this coating is to provide corrosion protection for the basis metal of parts operating at temperatures up to 482°C (900°F).

14.3 PLATING APPLICATION.

a. Unless otherwise specified, the coating shall be applied after all basis metal heat treatments and mechanical operations such as machining, brazing, welding, forming, and perforating of the article have been completed.

b. The basis metal shall be free from visible defects that will be detrimental to the appearance or protective value of the plating or intended use of the article.

14.4 UNDERPLATING.

Unless otherwise specified, the nickel plating shall be applied directly on the basis metal without a preliminary coating of other metal, except in the case of corrosion resistant steels in which a preliminary strike coating of nickel is permissible. The cadmium shall be deposited directly on the nickel deposit. In no case shall any underplate be substituted for any part of the specified nickel or cadmium thickness.

14.5 PLATING.

The plating shall be inspected after the application of each coating. The plating shall be smooth, fine-grained, adherent, uniform in appearance, and free from blisters, pits, nodules, excessive edge build-up, and other defects. After diffusion of the metal deposits, the plating shall be a dull matte finish, which is smooth to the touch, with a color varying from olive drab to black and be free from balling, blisters, nodules, pinholes, or pits when examined under 3 power magnification. If there are any defects, the entire procedure will be repeated from the beginning.

14.6 EQUIPMENT.

The equipment for nickel plating is specified in Chapter 12 of this manual. The equipment for cadmium plating is specified in Chapter 5 of this manual.

Table 14-1. Nickel-Cadmium Stripping Procedure

Step	Operation	Time	Solutions, Materials, and Current	Temp °C	Temp °F
1	Vapor degrease. **WARNING** Solvent vapors are toxic. Avoid inhalation of vapors or contact with skin or clothing.	As Req'd	ASTM D4081 and ASTM D4376 (Tetrachloroethylene) Alternates:	120 – 124	248 – 256
			ASTM D4080 (Trichloroethylene) **NOTE** Not to be used where prohibited by state regulations.	88 – 90	187 – 194
2	Mask for stripping if necessary.	As Req'd			

Table 14-1. Nickel-Cadmium Stripping Procedure - Continued

Step	Operation	Time	Solutions, Materials, and Current	Temp °C	Temp °F
3	Strip old plating.	As Req'd	C-106 Immersion Only **CAUTION** This solution not to be used if parts contain copper or silver braze or if part contains nickel plating under the nickel-cadmium protective coating; use Solution C-113.	49 – 54	120 – 130
			C-113 Immersion Only **NOTE** Higher temperatures may be used if part is not masked with wax.	49 – 54	120 – 130
4	Rinse.	As Req'd	Water	Rm – 82	Rm – 180
5	Examine for completeness of strip. Repeat Steps 3 through 5 if necessary.	As Req'd			
6	Remove masking.	As Req'd			
7	Rinse.	As Req'd	Water	49 – 82	120 – 180
8	Dry.	As Req'd	Shop Air	Room	Room
9	Preserve ferrous parts with corrosion prevention compound if necessary.	As Req'd	MIL-PRF-16173, Grade 3 Alternates:	Room	Room
			MIL-C-82594	Room	Room
			MIL-PRF-32033	Room	Room

Table 14-2. Nickel-Cadmium Electrodeposition on Steel

Step	Operation	Time	Solutions, Materials, and Current	Temp °C	Temp °F
1	Stress relieve all parts having a hardness of Rockwell C 40 or above.	MIN 2 hrs		149 ± 6	300 ± 10
2	Prepare part for plating.	As Req'd	Table 2-2		
3	Alkaline clean. Current to be OFF when immersing or withdrawing part.	1 – 3 min	C-201 3 – 6 Volts Anodic Alternates:	52 – 57	125 – 135
			C-203 3 – 6 Volts Anodic	52 – 57	125 – 135
			C-204 3 – 6 Volts Periodic reverse cycle, 10 sec anodic, 10 sec cathodic. End on anodic cycle.	52 – 57	125 – 135
4	Rinse.	15 – 60 sec	Water	Room	Room
5	Etch.	15 – 60 sec	C-302 Immersion Only Alternates:	Room	Room
			C-301 Immersion Only	Room	Room
			C-308 21.5 A/dm^2 (200 ASF) Anodic	Room	Room
			C-315 Immersion Only	Room	Room
6	Rinse.	15 – 60 sec	Water	Room	Room
7	Nickel plate. Current to be ON when immersing or withdrawing parts.	As Req'd to deposit 0.0002 – 0.0004 inch	C-412 2.7 – 8 A/dm^2 (25 – 75 ASF) Alternates:	46 – 54	115 – 130
			C-430 Immersion Only	77 – 88	170 – 190
			C-421 2.2 – 10.8 A/dm^2 (20 – 100 ASF)	46 – 54	115 – 130
8	Rinse.	15 – 60 sec	Water	Room	Room

Table 14-2. Nickel-Cadmium Electrodeposition on Steel - Continued

Step	Operation	Time	Solutions, Materials, and Current	Temp °C	Temp °F
9	Examine nickel plate. **NOTE** • To prevent passivation of nickel, this inspection should be done rapidly and while the part is kept wet. Do not touch plated surface. • Deposit must be smooth, uniform in appearance, adherent and free from pinholes, nodu1es, blisters, and other harmful defects.	As Req'd			
10	Cadmium plate. **CAUTION** If parts have been allowed to dry or been stripped of cadmium only, repeat Steps 3 through 6 prior to cadmium plating.	As Req'd to deposit 0.0001 – 0.0002 inch	C-405 1.6 – 2.7 A/dm^2 (15 – 25 ASF)	Room	Room
11	Rinse.	15 – 60 sec	Water	Room	Room
12	Conversion coat.	10 – 30 sec	C-435 Immersion Only	Room	Room
13	Rinse.	15 – 60 sec	Water	Room	Room
14	Remove masking.	As Req'd			
15	Rinse. **NOTE** Water hotter than 150°F (66°C) may damage the chromate coating.	As Req'd	Water	49 – 60	120 – 140
16	Dry.	As Req'd	Shop Air	Room	Room

Table 14-2. Nickel-Cadmium Electrodeposition on Steel - Continued

Step	Operation	Time	Solutions, Materials, and Current	Temp °C	Temp °F
17	Inspect plated deposit. **NOTE** • Deposit shall be smooth, fine-grained, adherent, and free from blisters, pits, nodu1es, and indications of burning. • If cadmium deposit is defective, strip in C-102 and reprocess starting with Step 10.	As Req'd			
18	Paint contact points.	As Req'd	Paint, aluminum heat resistant (1200°F) (TT-P-28)		
19	Bake.	1 hr		327 – 338	620 – 640
20	Inspect the diffused coating. **NOTE** An acceptable coating is dull matte, smooth, adherent, continuous, free from blisters, nodules, pits, balling, and varies in color from olive to black. If the coating is defective, the plating procedure must be repeated from Step 1.	As Req'd			

CHAPTER 15
RHODIUM ELECTRODEPOSITION

15.1 PURPOSE.

This chapter provides instructions for the electrodeposition of rhodium. The resulting coating will meet or exceed the requirements of MIL-R-46085.

15.2 GENERAL.

a. Rhodium is a hard, brilliant white, noble metal with excellent electrical properties and a high melting point 1960°C (3560°F). It is tarnish resistant, scratch resistant, and resistant to acids, halogens, and to industrial and marine environments.

b. Major decorative applications are for jewelry and silverware while its major engineering applications are for reflective surfaces and for electrical contact surfaces, particularly where elevated temperatures, long periods of inactivity, and wear are involved.

15.3 PLATING APPLICATION.

a. Unless otherwise specified, the plating shall be applied after all basis metal treatments and mechanical operations, such as machining, brazing, welding, forming, and perforating of the article have been completed.

b. The basis metal shall be free from visible defects that will be detrimental to the appearance, protective value of the plating, or intended use of the article.

15.4 UNDERPLATING.

Rhodium may be plated directly over nickel, palladium, silver, gold, or platinum after proper activation of the substratum. Surfaces other than those mentioned above shall be plated with nickel or nickel over copper as necessary. An underplating of nickel directly on basis metal shall be used when parts are of corrosion or heat resistant steels. In no case shall any underplate be substituted for any part of the specified rhodium thickness.

15.5 PLATING.

The plating shall be smooth, fine-grained, adherent, uniform in appearance, and be free from blisters, cracks, pits, nodules, excessive edge build-up, and other defects which might adversely affect the use or function of the part. Superficial staining resulting from rinsing or slight discoloration resulting from baking operations to relieve embrittlement shall not be cause for rejection where plating is required for reflective purposes.

15.6 EQUIPMENT.

15.6.1 Tank Construction. Rhodium plating tanks may be constructed of glass, hard rubber or plastic, or a steel tank lined with polyvinyl chloride.

15.6.2 Ventilation. The plating tank shall be equipped with a positive ventilation system capable of meeting or exceeding the ventilation requirements of AFOSHSTD 48-2.

15.6.3 Filtration. Filtration should be used frequent enough to maintain a clear solution. Filtration through activated carbon helps eliminate organic contamination.

15.6.4 Agitation. Moderate cathode agitation should be employed. This can be done by manua1 or mechanical movement of the part during application of current. Air agitation shall be avoided.

15.6.5 Anodes. Due to the expense of the anodes, small conforming anodes are generally employed. Anodes may be either platinum or platinized titanium and are connected to the positive terminal of the power supply. Anode to cathode area should be maintained at a 1:1 ratio.

15.6.6 Power Source. Electrodeposition requires Direct Current (DC) which can be supplied from either generators or rectifiers. Most plating solutions operate between 0 and 14 volts. However if plating is to be done on large parts at high current densities and with large anode-cathode distances, increased voltage may be necessary. Ripple value as measured with a true RMS voltmeter connected across the anode and cathode buss at the tank shall not exceed 10% of the DC operating voltage. Power sources will be certified semi-annually. Certification shall include a check of ripple, proper functioning of controls, and accuracy of all meters, counters, and timers which are integral parts of the power source.

15.7 BATH CHARACTERISTICS.

WARNING

Many plating solutions produce toxic mist and vapors, some of which are cumulative in nature. Therefore, precautions should be taken to avoid inhalation of fumes and any contact with skin or clothing.

a. The Industrial rhodium plating solution is composed of a rhodium sulfate concentrate (5 g/100mL) dissolved in a sulfuric acid solution. The rhodium sulfate concentrate supplies the metallic ions. The sulfuric acid keeps the rhodium in solution, increases electrical conductance, and controls the pH of the solution. The bath operates at a temperature of 43 – 48°C (110 – 120°F), a current density from 10 – 20 ASF, and a cathode efficiency of 80%.

b. Most plating applications require 0.00002 to 0.0002 inch of coating, however, heavier deposits may be attained by doubling the rhodium content of the solution and using more vigorous agitation.

c. Purity of the solution is extremely important in that minute quantities of inorganic impurities cause brittle deposits and promote premature flaking of coatings while organic impurities cause loss of brightness of deposit.

Table 15-1. Rhodium Stripping Procedure

Step	Operation	Time	Solutions, Materials, and Current	Temp °C	Temp °F
1	Vapor degrease. **WARNING** Solvent vapors are toxic. Avoid inhalation of vapors or contact with skin or clothing.	As Req'd	ASTM D4081 and ASTM D4376 (Tetrachloroethylene) Alternates:	120 – 124	248 – 256
			ASTM D4080 (Trichloroethylene) **NOTE** Not to be used where prohibited by state regulations.	88 – 90	187 – 194
2	Mask part for stripping if necessary.	As Req'd			
3	Strip old plating.	As Req'd	C-121 7 Volt Anodic.	32 – 38	90 – 100
4	Rinse.	As Req'd	Water	Rm – 82	Rm – 180
5	Examine for completeness of strip. Repeat Steps 3 through 5 if necessary.	As Req'd			
6	Remove masking.	As Req'd			
7	Rinse.	As Req'd	Water	49 – 82	120 – 180
8	Dry.	As Req'd	Shop Air	Room	Room
9	Preserve steel parts with corrosion prevention compound if necessary.	As Req'd	MIL-PRF-16173, Grade 3 Alternates:	Room	Room
			MIL-C-82594	Room	Room
			MIL-PRF-32033	Room	Room

Table 15-2. Rhodium Electrodeposition on Steel Parts Other Than Stainless Steel or Those That Have Been Plated with Nickel, Silver, Platinum, Gold or Palladium

Step	Operation	Time	Solutions, Materials, and Current	Temp °C	Temp °F
1	Stress relieve all steel parts having a hardness of Rockwell C 33 or above which have been machined, ground, cold-formed, or cold-straightened.	3 hrs MIN		191 ± 14	375 ± 25
2	Prepare part for plating.	As Req'd	Table 2-2		
3	Alkaline clean. Current to be OFF when immersing or withdrawing parts.	1 – 3 min	C-201 3 – 6 Volts Anodic Alternates:	52 – 57	125 – 135
			C-203 3 – 6 Volts Anodic	52 – 57	125 – 135
			C-204 3 – 6 Volts Periodic reverse cycle, 10 sec anodic, 10 sec cathodic. End on anodic cycle.	52 – 57	125 – 135
4	Rinse.	15 – 60 sec	Water	Room	Room
5	Etch.	15 – 60 sec	C-301 Immersion Only	Room	Room
			C-308 21.5 A/dm^2 (200 ASF) Anodic	Room	Room
			C-315 Immersion Only	Room	Room
6	Rinse.	15 – 60 sec	Water	Room	Room
7	(OPTIONAL STEP) Copper strike. Current to be ON when immersing or withdrawing parts.	3 – 5 min	C-411 1.6 – 4.8 A/dm^2 (15 – 45 ASF)	49 – 54	120 – 130
8	Rinse.	15 – 60 sec	Water	Room	Room
9	Nickel strike. Current to be ON when immersing or withdrawing parts.	4 – 6 min	C-403 3.7 – 7.5 A/dm^2 (35 – 70 ASF)	Room	Room
10	Rinse.	15 – 60 sec	Water	Room	Room
11	Neutralize.	15 – 30 sec	C-413	Room	Room
12	Rinse.	15 – 60 sec	Water	Room	Room
13	Rhodium plate.	As Req'd	C-428 1.1 – 2.2 A/dm^2 (10 – 20 ASF)	43 – 49	110 – 120

Table 15-2. Rhodium Electrodeposition on Steel Parts Other Than Stainless Steel or Those That Have Been Plated with Nickel, Silver, Platinum, Gold or Palladium - Continued

Step	Operation	Time	Solutions, Materials, and Current	Temp °C	Temp °F
	Current to be ON when immersing parts.				
14	Rinse.	As Req'd	Water	Rm – 82	Rm – 180
15	Dry.	As Req'd	Shop Air	Room	Room
16	Remove masking.	As Req'd			
17	Inspect plated deposit. **NOTE** An acceptable rhodium deposit shall be smooth, and free from cracks, streaks, burns, milkiness, poor coverage, built-up edges, or other defects which might adversely affect the use or function of the part.	As Req'd			
18	Unless otherwise specified, bake all parts having a hardness of Rockwell C 33 or above. **NOTE** Embrittlement relief will be initiated within 4 hours of plating.	3 hrs MIN		191 ± 14	375 ± 25
19	Reinspect plated deposit.	As Req'd			
20	Preserve steel parts with corrosion prevention compound.	As Req'd	MIL-PRF-16173, Grade 3 Alternates:	Room	Room
			MIL-C-82594	Room	Room
			MIL-PRF-32033	Room	Room

Table 15-3. Rhodium Electrodeposition on Stainless and Parts Previously Plated with Nickel, Silver, Platinum, Palladium or Gold

Step	Operation	Time	Solutions, Materials, and Current	Temp °C	Temp °F
1	Stress relieve all steel parts having a hardness of Rockwell C 33 or above which have been machined, ground, cold-formed, or cold-straightened.	MIN 3 hrs		191 ± 14	375 ± 25
2	Prepare part for plating. **NOTE** For parts freshly plated with nickel, gold, silver, palladium, or platinum, time and/or voltages in Steps 3 and 5 may be reduced as necessary to obtain desired bright finish.	As Req'd	Table 2-2		
3	Alkaline clean. Current to be OFF when immersing or withdrawing parts.	1 – 3 min	C-201 3 – 6 Volts Anodic Alternates:	52 – 57	125 – 135
			C-203 3 – 6 Volts Anodic	52 – 57	125 – 135
			C-204 3 – 6 Vo1ts Periodic reverse cyc1e, 10 sec anodic, 10 sec cathodic. End on anodic cyc1e.	52 – 57	125 – 135
4	Rinse.	15 – 60 sec	Water	Room	Room
5	Etch. **NOTE** For parts previously plated with nickel, gold, silver, palladium, or platinum use immersion only and after Step 6 go directly to Step 13.	15 – 60 sec	C-302 Immersion Only Alternates:	Room	Room
			C-304 Immersion Only	Room	Room
			C-309 21.5 A/dm^2 (200 ASF) Anodic	Room	Room
6	Rinse.	15 – 60 sec	Water	Room	Room
7	Nickel strike.	4 – 6 min	C-403 3.8 – 7.5 A/dm^2 (35 – 70 ASF)	Room	Room

Table 15-3. Rhodium Electrodeposition on Stainless and Parts Previously Plated with Nickel, Silver, Platinum, Palladium or Gold - Continued

Step	Operation	Time	Solutions, Materials, and Current	Temp °C	Temp °F
	Current to be ON when immersing or withdrawing parts.				
8	Rinse.	15 – 60 sec	Water	Room	Room
9	Neutralize.	15 – 30 sec	C-413 Immersion Only	Room	Room
10	Rinse.	15 – 60 sec	Water	Room	Room
11	(OPTIONAL STEP) Silver strike.	15 – 30 sec	C-417 1.6 – 3.8 A/dm^2 (15 – 35 ASF)	Room	Room
12	Rinse.	15 – 60 sec	Water	Room	Room
13	Rhodium plate. Current to be ON when immersing parts.	As Req'd	C-428 1.1 – 2.2 A/dm^2 (10 – 20 ASF)	43 – 49	110 – 120
14	Rinse.	As Req'd	Water	Rm – 82	Rm – 180
15	Dry.	As Req'd	Shop Air	Room	Room
16	Remove masking.	As Req'd			
17	Inspect plated deposit. **NOTE** An acceptable rhodium deposit shall be smooth, and free from cracks, streaks, burns, milkiness, poor coverage, built-up edges, or other defects which might adversely affect the use or function of the part.	As Req'd			
18	Bake all steel parts having a hardness of Rockwell C 33 or above. **NOTE** Embrittlement relief will be initiated within 4 hours of plating.	3 hrs MIN		191 ± 14	375 ± 25
19	Reinspect plated deposit.	As Req'd			

Table 15-3. Rhodium Electrodeposition on Stainless and Parts Previously Plated with Nickel, Silver, Platinum, Palladium or Gold - Continued

Step	Operation	Time	Solutions, Materials, and Current	Temp °C	Temp °F
20	Preserve steel parts with corrosion prevention compound if necessary.	As Req'd	MIL-PRF-16173, Grade 3 Alternates:	Room	Room
			MIL-C-82594	Room	Room
			MIL-PRF-32033		

Table 15-4. Rhodium Electrodeposition on Copper and Copper Base Alloys

Step	Operation	Time	Solutions, Materials, and Current	Temp °C	Temp °F
1	Prepare for plating.	As Req'd	Table 2-2 C-201 (3 – 6 Volts cathodic)	52 – 57	125 – 135
2	Alkaline clean. Current to be OFF during immersion or withdrawal of part.	30 – 90 sec	C-203 (3 – 6 Volts cathodic)	52 – 57	125 – 135
3	Rinse.	15 – 60 sec	Water	Room	Room
4	Acid dip.	20 – 30 sec	C-301	Room	Room
5	Rinse.	15 – 60 sec	Water	Room	Room
6	Copper strike. Current to be ON during immersion or withdrawal of part.	3 – 5 min	C-411 (1.6 – 4.8 A/dm^2, 15 – 45 ASF)	49 – 54	120 – 130
7	Nickel strike.	4 – 8 min	C-403 (3.8 – 7.5 A/dm^2, 35 – 70 ASF)	Room	Room
8	Rinse.	15 – 60 sec	Water	Room	Room
9	Rhodium plate.	As Req'd	C-428 (1.1 – 2.2 A/dm^2, 10 – 25 ASF)	43 – 49	110 – 120
10	Rinse.	15 – 60 sec	Water	Room	Room
11	Neutralize.	15 – 30 sec	C-413	Room	Room
12	Rinse.	15 – 60 sec	Water	Room	Room
13	Rhodium plate.	As Req'd	C-428 (1.1 – 2.2 A/dm^2, 10 – 25 ASF)	43 – 49	110 – 120
14	Rinse.	15 – 60 sec	Water	Room	Room
15	Dry.	As Req'd	Shop Air	Room	Room

Table 15-4. Rhodium Electrodeposition on Copper and Copper Base Alloys - Continued

Step	Operation	Time	Solutions, Materials, and Current	Temp °C	Temp °F
16	Remove masking.	As Req'd			
17	Inspect deposit. **NOTE** An acceptable rhodium deposit shall be smooth, and free from cracks, streaks, burns, milkiness, poor coverage, built-up edges, or other defects which might adversely affect the use or function of the part.	As Req'd			

CHAPTER 16
SILVER ELECTRODEPOSITION

16.1 PURPOSE.

This chapter provides instructions for the electrodeposition of silver. The resulting coating shall meet or exceed the requirements of Specification ASTM B700.

16.2 GENERAL.

a. Silver is a soft-white, malleable, ductile metal with an attractive appearance. It is an excellent conductor of heat and electricity and is resistant to oxidation and corrosion but readily tarnishes in the presence of sulfide containing atmospheres. It has good anti-galling properties, is highly reflective, and is easily soldered. Because of its favorable properties, silver plating is utilized for many decorative and engineering applications.

b. Silver's anti-galling properties make it a valuable coating for use on surfaces such as bearings, slip-rings, air seals, and threaded areas. Its electrical properties make it useful for electrical contacts, wave-guides, and transfer of current. It is further used as an underplating for gold, rhodium, and lead alloy deposits. Where appearance, conductivity, corrosion protection, reflectivity, and solderability are involved, silver is considered. The cost is usually the limiting factor to the application of silver.

16.3 PLATING APPLICATION.

a. Unless otherwise specified, the basis metal shall be free from scratches, pits, non-conducting inclusions, roll and die marks, and other visible defects that will be detrimental to the appearance, protective value, or intended use of the plating.

b. The plating shall be applied after all basis metal heat treatments and mechanical operations such as machining, brazing, welding, forming, and perforating of the article have been completed.

16.4 UNDERPLATING.

a. The final silver deposit shall be applied over an electrodeposited coating of silver from a silver strike solution. The silver strike shall be applied over an intermediate coating of nickel, or nickel over copper on steel, zinc and zinc-base alloys, or copper and copper base alloys.

b. Copper-alloy basis metal articles on which a nickel undercoat is not used or other basis metals whereon a copper undercoat is employed shall not be used for continuous service at temperatures exceeding 149°C (300°F). Adhesion of the silver plating is adversely affected because of the formation by diffusion of a weak eutectic of silver and copper at the interface.

16.5 PLATING.

The plating shall be smooth, fine-grained, adherent, free from visible blisters, pits, nodules, porosity, indications of burning, excessive edge build-up, and other harmful defects. Superficial staining resulting from rinsing or slight discolorations from baking to relieve embrittlement shall not be cause for rejection.

16.6 EQUIPMENT.

16.6.1 Tank Construction. Tanks can be constructed of polyvinyl chloride lined steel, stainless steel, Pyrex, plastics, stoneware, or approved compositions of rubber. If steel tanks are used they should be lined with a non-conductive material to prevent stray currents, bipolarization, and iron contamination.

16.6.2 Ventilation. The plating tank shall be equipped with a positive ventilation system capable of meeting or exceeding the ventilation requirements of AFOSHSTD 48-2.

16.6.3 Filtration. Continuous solution filtration shall be provided to minimize deposit roughness. The system should be equipped with equipment that allows for treatment with activated carbon to remove harmful organic impurities. Filtration equipment should be constructed of stainless steel, plastic, or lined steel. Filtration rate should allow for two complete solution turnovers per hour. Care must be exercised to prevent the introduction of air into the plating solution.

16.6.4 Agitation. Agitation is necessary for the application of smooth silver deposits. Agitation is usually accomplished by movement of cathodes supplemented with solution movement by pumps or from solution filtration. Solution agitation should be such that air is not introduced into the plating solution. Air promotes pitted plated deposits.

16.6.5 Anodes.

a. The anode system consists of cast, rolled, or extruded 99.9+% silver anodes suspended from bars in bays or of conforming anodes connected to the positive terminal of the power supply. Anodes

may be balls, shot, bars, plates, or other special shapes. There are two grades of anodes available, a regular grade and a high quality grade. High quality anodes must be used for optimum plating performance. Impurities in anodes cause the formation of a black film or flaking which results in reduced anode efficiency and roughness of plated deposit. This roughness can be eliminated by bagging the anodes in Dynel, nylon, polypropylene, or other suitable material.

b. Stainless steel anodes may be used but frequent additions of silver cyanide must be made to the bath to maintain desired silver content.

c. Anode to cathode area should be maintained at a 1:1 ration.

16.6.6 Power Source. Electrodeposition requires Direct Current (DC) which can be supplied from either generators or rectifiers. Most plating solutions operate between 0 and 14 volts. However if plating is to be done on large parts at high current densities and with large anode-cathode distances, increased voltage may be necessary. Ripple value as measured with a true RMS voltmeter connected across the anode and cathode buss at the tank shall not exceed 10% of the DC operating voltage. Power sources will be certified semi-annually. Certification shall include a check of ripple, proper functioning of controls, and accuracy of all meters, counters, and timers which are integral parts of the power source.

16.7 BATH CHARACTERISTICS.

WARNING

Many plating solutions produce toxic mist and vapors, some of which are cumulative in nature. Therefore, precautions should be taken to avoid inhalation of fumes and any contact with skin or clothing.

a. The bath is composed of silver cyanide, potassium cyanide, potassium carbonate, potassium hydroxide, and usually a brightener.

b. Silver may be deposited from either a conventional bath (thin deposits) or from a high-speed bath utilized for heavy build-up. The main difference in the baths is the silver concentrations (highest in the high-speed bath).

c. The conventional bath operates between 24 – 32°C (75 – 90°F) and at a current density of 1.1 – 2.7 A/dm^2 (10 – 25 ASF). The high-speed bath operates at temperatures up to 54°C (130°F) maximum and at a current density of 2.7 – 10.8 A/dm^2 (25 – 100 ASF). The limiting of current density depends largely on the flow of plating solution over the cathode surface. Maximum agitation is attained by movement of the parts augmented by solution movement by means of pumps or propellers.

d. Silver cyanide provides the silver for deposition, potassium cyanide increases the conductivity, and potassium carbonate adds to the conductivity of the bath and increases anode and cathode polarization, which aids in increased throwing power.

e. The solution operates at a cathode efficiency of 100%. Therefore, when silver anodes are used, the bath is somewhat self-regulating except for the loss of chemicals by solution drag-out. This loss of solution can be minimized by rinsing the parts over the plating tank upon withdrawal from the solution.

f. The grain size, smoothness, and brightness of silver deposits can be enhanced by the addition of sulfur bearing compounds. For new solution, the addition of ½ fluid ounce of a concentrated (approximately 60%) solution of sodium or ammonium thiosulfate is added for each 100 gallons of solution. These brighteners are relatively unstable and small additions must be made every several hours to prevent variations in the plate appearance and quality.

g. Silver plating solutions are relatively easy to maintain and control. Small amounts of metallic impurities have little effect on the deposit; however as with all plating baths, good housekeeping habits should be practiced to prevent heavy metallic and organic contamination.

Table 16-1. Plating Speed at 99% Cathode Efficiency

Average Thickness in Inches	A/dm² (ASF)						
	0.5 (5)	1.1 (10)	1.6 (15)	2.7 (25)	5.4 (50)	8.1 (75)	10.8 (100)
0.00001	0.8	0.4	0.3	0.2	0.1	0.1	0.0
0.00002	1.5	0.8	0.5	0.3	0.2	0.1	0.1
0.00003	2.3	1.1	0.8	0.5	0.2	0.2	0.1
0.00004	3.0	1.5	1.0	0.6	0.3	0.2	0.2
0.00005	3.8	1.9	1.3	0.8	0.4	0.3	0.2
0.00006	4.6	2.3	1.5	0.9	0.5	0.3	0.2
0.00007	5.3	2.7	1.8	1.1	0.5	0.4	0.3
0.00008	6.1	3.0	2.0	1.2	0.6	0.4	0.3
0.00009	6.8	3.4	2.3	1.4	0.7	0.5	0.3
0.0001	7.6	3.8	2.5	1.5	0.8	0.5	0.4
0.0002	15.2	7.6	5.1	3.0	1.5	1.0	0.8
0.0003	22.8	11.4	7.6	4.6	2.3	1.5	1.1
0.0004	30.4	15.2	10.1	6.1	3.0	2.0	1.5
0.0005	38.0	19.0	12.7	7.6	3.8	2.5	1.9
0.0006	45.6	22.8	15.2	9.1	4.6	3.0	2.3
0.0007	53.2	26.6	17.7	10.6	5.3	3.5	2.7
0.0008	60.8	30.4	20.3	12.2	6.1	4.1	3.0
0.0009	68.4	34.2	22.8	13.7	6.8	4.6	3.4
0.001	76.0	38.0	25.3	15.2	7.6	5.1	3.8
0.002	152.0	76.0	50.7	30.4	15.2	10.1	7.6
0.003	228.0	114.0	76.0	45.6	22.8	15.2	11.4
0.004	304.0	152.0	101.3	60.8	30.4	20.3	15.2
0.005	380.0	190.0	126.7	76.0	38.0	25.3	19.0
0.006	456.0	228.0	152.0	91.2	45.6	30.4	22.8
0.007	532.0	266.0	177.3	106.4	53.2	35.5	26.6
0.008	608.0	304.0	202.7	121.6	60.8	40.5	30.4
0.009	684.0	342.0	228.0	136.8	68.4	45.6	34.2
0.010	760.0	380.0	253.3	152.0	76.0	50.7	38.0
0.011	836.0	418.0	278.7	167.2	83.6	55.7	41.8
0.012	912.0	456.0	304.0	182.4	91.2	60.8	45.6
0.013	988.0	494.0	329.3	197.6	98.8	65.9	49.4
0.014	1064.0	532.0	354.7	212.8	106.4	70.9	53.2
0.015	1140.0	570.0	380.0	228.0	114.0	76.0	57.0
	Time in Minutes						

Table 16-2. Silver Stripping Procedure

Step	Operation	Time	Solutions, Materials, and Current	Temp °C	Temp °F
1	Vapor degrease. **WARNING** Solvent vapors are toxic. Avoid inhalation of vapors or contact with skin or clothing.	As Req'd	ASTM D4081 and ASTM D4376 (Tetrachloroethylene) Alternates:	120 – 124	248 – 256
			ASTM D4080 (Trichloroethylene) **NOTE** Not to be used where prohibited by state regulations.	88 – 90	187 – 194
2	Mask for stripping if necessary.	As Req'd			
3	Strip old plating.	As Req'd	From Steel C-101 2 – 4 Volts Anodic Alternates:	20 – 25	68 – 77
			C-106 Immersion Only	49 – 54	120 – 130
			C-107 2 – 4 volts anodic	49 – 60	120 – 140
			From Stainless Steel or Aluminum Alloys C-120 Immersion Only	Room	Room
			From Copper Alloys C-117 Immersion Only	60 – 82	140 – 180
4	Rinse.	As Req'd	Water	Rm – 82	Rm – 180
5	Examine for completeness of strip. Repeat Steps 3 thru 5 if necessary.	As Req'd			
6	Remove masking.	As Req'd			
7	Rinse.	As Req'd	Water	49 – 82	120 – 180
8	Dry.	As Req'd	Shop Air	Room	Room
9	Preserve ferrous metal parts with corrosion prevention compound if necessary.	As Req'd	MIL-PRF-16173, Grade 3 Alternates:	Room	Room
			MIL-C-82594	Room	Room
			MIL-PRF-32033	Room	Room

Table 16-3. Silver Electrodeposition on Aluminum Alloys

Step	Operation	Time	Solutions, Materials, and Current	Temp °C	Temp °F
1	Strip anodize if necessary.	As Req'd	C-116 Immersion Only Alternates:	71 – 82	160 – 180
			C-137 Immersion Only	82 – 100	180 – 212
2	Prepare part for plating.	As Req'd	Table 2-2		
3	Alkaline clean.	1 – 2 min	C-202 Immersion Only Alternates:	52 – 57	125 – 135
			C-205 Immersion Only	52 – 57	125 – 135
4	Rinse. **NOTE** Vigorous agitation must be used on Steps 4 thru 15.	30 – 60 sec	Water	Room	Room
5	Etch.	10 – 30 sec	C-311 Immersion Only	Room	Room
6	Rinse.	30 – 60 sec	Water	Room	Room
7	Etch.	10 – 30 sec	C-316 Immersion Only Alternates:	Room	Room
			C-304 Immersion Only	Room	Room
8	Rinse.	30 – 60 sec	Water	Room	Room
9	Zincate.	30 sec	C-410 Immersion Only	21 – 24	70 – 75
10	Strip Zincate.	5 – 20 sec	C-311 Immersion Only Alternates:	Room	Room
			C-310 Immersion Only	Room	Room
11	Rinse.	30 – 60 sec	Water	Room	Room
12	Etch.	10 – 30 sec	C-3l6 Immersion Only Alternates:	Room Room	Room Room
			C-304 Immersion Only	Room	Room
13	Rinse.	30 – 60 sec	Water	Room	Room
14	Zincate.	30 – 60 sec	C-410 Immersion Only	21 – 24	70 – 75

Table 16-3. Silver Electrodeposition on Aluminum Alloys - Continued

Step	Operation	Time	Solutions, Materials, and Current	Temp °C	Temp °F
15	Rinse. **NOTE** If anodes are to be attached to the part, they must be installed while part is submerged in water. Part must be kept wet between steps.	30 – 60 sec	Water	Room	Room
16	(OPTIONAL STEP) Copper strike. Current to be ON when immersing or withdrawing parts.	4 – 7 min	C-472 Use 2.6 A/dm^2 (24 ASF) for 2 minutes, then reduce to 1.3 A/dm^2 (12 ASF) for remainder of strike time.	38 – 54	100 – 130
17	Rinse.	30 – 60 sec	Water	Room	Room
18	Nickel strike. Current to be ON when immersing or withdrawing parts.	10 – 12 min	C-412 3.2 A/dm^2 (30 ASF) Alternates:	46 – 54	115 – 130
			C-430 Immersion Only	77 – 88	170 – 190
19	Rinse.	30 – 60 sec	Water	Room	Room
20	Silver strike. Current to be ON when immersing or withdrawing parts.	20 – 30 sec	C-4l7 1.6 – 3.8 A/dm^2 (15 – 35 ASF)	Room	Room
21	Silver plate. Current to be ON when immersing parts.	As Req'd	C-418 1.1 – 2.7 A/dm^2 (10 – 25 ASF) Alternates:	24 – 32	75 – 90
			C-419 2.7 – 10.8 A/dm^2 (25 – 100 ASF)	Rm – 54	Rm – 130
22	Rinse.	As Req'd	Water	Rm – 82	Rm – 180
23	Dry.	As Req'd	Shop Air	Room	Room
24	Remove masking.	As Req'd			

Table 16-3. Silver Electrodeposition on Aluminum Alloys - Continued

Step	Operation	Time	Solutions, Materials, and Current	Temp °C	Temp °F
25	Inspect deposit. **NOTE** An acceptable silver deposit shall be smooth, fine-grained, adherent, and free from blisters, pits, nodules, porosity, indications of burning, excessive edge build-up, and other harmful defects.	As Req'd			
26	Bake unless otherwise specified on instructions on individual parts.	3 hrs MIN		191 ± 14	375 ± 25
27	Reinspect silver deposit.	As Req'd			
28	Preserve with corrosion prevention compound if necessary.	As Req'd	MIL-PRF-16173, Grade 3 Alternates:	Room	Room
			MIL-C-82594	Room	Room
			MIL-PRF-32033	Room	Room

Table 16-4. Silver Electrodeposition on Steel

Step	Operation	Time	Solutions, Materials, and Current	Temp °C	Temp °F
1	Stress relieve all steel parts which are suspected of having residual tensile stresses caused by machining, grinding, cold-forming, or cold-straightening.	3 hrs MIN		191 ± 14	375 ± 25
2	Prepare part for plating.	As Req'd	Table 2-2		
3	Alkaline clean. Current to OFF when immersing or withdrawing parts.	1 – 3 min	C-201 3 – 6 Volts Anodic Alternates:	52 – 57	125 – 135
			C-203 3 – 6 Volts Anodic	52 – 57	125 – 135
			C-204 3 – 6 Volts Periodic reverse cycle, 10 sec anodic, 10 sec cathodic. End on anodic cycle.	52 – 57	125 – 135
4	Rinse.	15 – 60 sec	Water	Room	Room

Table 16-4. Silver Electrodeposition on Steel - Continued

Step	Operation	Time	Solutions, Materials, and Current	Temp °C	Temp °F
5	Etch.	30 – 60 sec	C-301 Immersion Only Alternates:	Room	Room
			C-308 21.5 A/dm^2 (200 ASF) Anodic	Room	Room
			C-315 Immersion Only	Room	Room
6	Rinse.	15 – 60 sec	Water	Room	Room
7	(OPTIONAL STEP) Copper strike. Current to be ON when immersing or withdrawing parts.	3 – 5 min	C-411 1.6 – 4.8 A/dm^2 (15 – 45 ASF)	49 – 54	120 – 130
8	Rinse.	15 – 60 sec	Water	Room	Room
9	Nickel strike. Current to be ON when immersing or withdrawing parts. 4 – 6 min (recommended)	As Req'd 4 – 6 min	C-403 3.8 – 7.5 A/dm^2 (35 – 70 ASF) Alternates:	Room	Room
			C-412 or C-414 3.8 – 7.5 A/dm^2 (35 – 70 ASF)	Rm – 54	Rm – 130
	30 – 60 sec (recommended)	As Req'd 30 – 60 sec	C-467 1 – 10 A/dm^2 (10 – l00 ASF)	Room	Room
10	Rinse.	15 – 60 sec	Water	Room	Room
11	Silver strike. Current to be ON when immersing or withdrawing parts.	20 – 30 sec	C-417 1.6 – 3.8 A/dm^2 (15 – 35 ASF)	Room	Room
12	Silver plate. Current to be ON when immersing parts.	As Req'd	C-418 1.1 – 2.7 A/dm^2 (10 – 25 ASF) Alternates:	24 – 32	75 – 90
			C-419 2.7 – 10.8 A/dm^2 (25 – 100 ASF)	Rm – 54	Rm – 130
13	Rinse.	As Req'd	Water	Rm – 82	Rm – 180
14	Remove masking.	As Req'd			
15	Rinse.	As Req'd	Water	49 – 82	120 – 180

Table 16-4. Silver Electrodeposition on Steel - Continued

Step	Operation	Time	Solutions, Materials, and Current	Temp °C	Temp °F
16	Dry.	As Req'd	Shop Air	Room	Room
17	Inspect silver deposit. **NOTE** An acceptable silver deposit shall be smooth, fine-grained, adherent, and free from visible blisters, pits, nodules, porosity, indications of burning, excessive edge build-up, and other harmful defects. Superficial staining resulting from rinsing or baking operations will not be cause for rejection.	As Req'd			
18	Bake all steel parts having a hardness of Rockwell C 40 or above. **NOTE** Embrittlement relief will be initiated within 4 hours of plating.	3 hrs MIN		191 ± 14	375 ± 25
19	Reinspect plated deposit.	As Req'd			
20	Preserve all ferrous parts with corrosion prevention compound.	As Req'd	MIL-PRF-16173, Grade 3 Alternates:	Room	Room
			MIL-C-82594	Room	Room
			MIL-PRF-32033	Room	Room

Table 16-5. Silver Electrodeposition on Stainless Steel, Cobalt and Nickel Based Alloys

Step	Operation	Time	Solutions, Materials, and Current	Temp °C	Temp °F
1	Stress relieve all steel parts which are suspected of having residual tensile stress caused by machining, grinding, cold-forming, or cold-straightening.	3 hrs MIN		191 ± 14	375 ± 25
2	Prepare part for plating.	As Req'd	Table 2-2		

Table 16-5. Silver Electrodeposition on Stainless Steel, Cobalt and Nickel Based Alloys - Continued

Step	Operation	Time	Solutions, Materials, and Current	Temp °C	Temp °F
3	Alkaline clean. Current to be OFF when immersing or withdrawing parts.	1 – 3 min	C-201 3 – 6 Volts Anodic Alternates:	52 – 57	125 – 135
			C-203 3 – 6 Volts Anodic	52 – 57	125 – 135
			C-204 3 – 6 Volts Periodic reverse cycle, 10 sec anodic, 10 sec cathodic. End on anodic cycle.	52 – 57	125 – 135
4	Rinse.	15 – 60 sec	Water	Room	Room
5	Etch. **NOTE** If smut is present after etch operation, repeat Steps 3 thru 5 and eliminate current on etch step.	30 – 60 sec	C-302 Immersion Only Alternates:	Room	Room
			C-304 10.5 A/dm^2 (100 ASF) Anodic	Room	Room
			C-306 10.5 A/dm^2 (100 ASF) Anodic	Room	Room
			C-309 21.5 A/dm^2 (200 ASF) Anodic	Room	Room
6	Rinse.	15 – 60 sec	Water	Room	Room
7	(OPTIONAL STEP) CAUTION CYANIDE DIP	As Req'd	C-423 Immersion Only	Room	Room
8	Nickel strike. Current to be ON when immersing or withdrawing parts.	4 – 6 min	C-403 3.8 – 7.5 A/dm^2 (35 – 70 ASF)	Room	Room
9	Rinse.	15 – 60 sec	Water	Room	Room
10	Silver strike. Current to be ON when immersing or withdrawing parts.	20 – 30 sec	C-417 1.6 – 3.8 A/dm^2 (15 – 35 ASF)	Room	Room
11	Silver plate. Current to be ON when immersing parts.	As Req'd	C-418 1.1 – 2.7 A/dm^2 (10 – 25 ASF)	24 – 32	75 – 90

Table 16-5. Silver Electrodeposition on Stainless Steel, Cobalt and Nickel Based Alloys - Continued

Step	Operation	Time	Solutions, Materials, and Current	Temp °C	Temp °F
			Alternates:		
			C-419 2.7 – 10.8 A/dm^2 (25 – 100 ASF)	Rm – 54	Rm – 130
12	Rinse.	As Req'd	Water	Rm – 82	Rm – 100
13	Dry.	As Req'd	Shop Air	Room	Room
14	Remove masking.	As Req'd			
15	Inspect silver deposit. **NOTE** An acceptable silver deposit shall be smooth, fine-grained, adherent, and free from blisters, pits, nodules, porosity, indications of burning, excessive edge build-up, and other harmful defects.	As Req'd			
16	Bake all steel parts having a hardness of Rockwell C 40 or above. **NOTE** Embrittlement relief will be initiated within 4 hours of plating.	3 hrs MIN		191 ± 14	375 ± 25
17	Reinspect plated deposit.	As Req'd			
18	Preserve ferrous parts with corrosion prevention compound if necessary.	As Req'd	MIL-PRF-16173, Grade 3	Room	Room
			Alternates:		
			MIL-C-82594	Room	Room
			MIL-PRF-32033	Room	Room

Table 16-6. Silver Electrodeposition on Copper and Copper Base Alloys

Step	Operation	Time	Solutions, Materials, and Current	Temp °C	Temp °F
1	Prepare for plating.	As Req'd	Table 2-2 C-201 (3 – 6 Volts cathodic)	52 – 57	125 – 135
2	Alkaline clean. Current to be OFF during immersion or withdrawal of part.	30 – 90 sec	C-203 (3 – 6 Volts cathodic)	52 – 57	125 – 135
3	Rinse.	15 – 60 sec	Water	Room	Room
4	Acid dip.	20 – 30 sec	C-301	Room	Room
5	Rinse.	15 – 60 sec	Water	Room	Room
6	Copper strike. Current to be ON during immersion or withdrawal of part.	3 – 5 min	C-411 (1.6 – 4.8 A/dm^2, 15 – 45 ASF)	49 – 54	120 – 130
7	Rinse.	15 – 60 sec	Water	Room	Room
8	Nickel strike.	4 – 8 min	C-403 (3.8 – 7.5 A/dm^2 35 – 70 ASF)	Room	Room
9	Rinse.	15 – 60 sec	Water	Room	Room
10	Silver strike. Current to be ON during immersion or withdrawal of part.	20 – 30 sec	C-417 (1.6 – 3.8 A/dm^2, 15 – 35 ASF)	Room	Room
11	Silver plate.	As Req'd	C-418 (1.1 – 2.7 A/dm^2, 10 – 25 ASF)	Room	Room
12	Rinse.	15 – 60 sec	Water	Room	Room
13	Remove masking.	As Req'd			
14	Rinse.	15 – 60 sec	Water	Room	Room
15	Dry.	As Req'd	Shop Air	Room	Room

Table 16-6. Silver Electrodeposition on Copper and Copper Base Alloys - Continued

Step	Operation	Time	Solutions, Materials, and Current	Temp °C	Temp °F
16	Inspect deposit. **NOTE** An acceptable silver deposit shall be smooth, adherent, fine-grained, and free from blisters, pits, nodules, porosity, indications of burning, excessive edge build-up, and other harmful defects.	As Req'd			

CHAPTER 17
TIN ELECTRODEPOSITION

17.1 PURPOSE.

This chapter provides instructions for the electrodeposition of tin. All plating under this chapter will conform to the requirements of Specifications ASTM B545 and ASTM B339.

17.2 GENERAL.

Tin is an attractive, soft, silver-white, ductile metal which is corrosion, stain, and tarnish resistant and melts at 232°C (450°F). It exhibits poor wear and abrasion resistance which is used to advantage in plating such items as pistons and piston rings to prevent seizing and scoring of cylinder walls. It is non-toxic; therefore is used extensively in the food processing and handling equipment. Its softness, ductility, and lubricity make it useful for the coating of bearing surfaces and its solderability and appearance make it an important coating for electronic equipment. Tin offers good corrosion protection in most environments, but must be deposited thick enough to produce virtually a non-porous coating. The corrosion protection of tin is affected by rainfall and atmospheric pollutants, but not as severely as cadmium or zinc coatings. Tin is also used as a STOP OFF in nitriding operations.

17.3 PLATING APPLICATION.

a. Unless otherwise specified, the plating shall be applied after all basis metal heat treatments and mechanical operations such as machining, brazing, welding, forming, and perforating of the article have been completed except where the application is used to facilitate a subsequent operation.

b. The basis metal shall be free from visible defects that will be detrimental to the appearance or protective value of the plating or intended use of the article.

17.4 UNDERPLATING.

Unless otherwise specified, the plating shall be deposited directly on the basis metal, except in the case of aluminum parts on which a preliminary Zincate process followed by necessary strike coatings is permissible. In no case shall any underplate be substituted for any part of the specified tin thickness.

17.5 PLATING.

The plating shall be smooth, fine-grained, adherent, uniform in appearance, and free from blisters, pits, nodules, indications of burning, excessive edge build-up, and other defects. Superficial staining resulting from rinsing or baking operations will not be cause for rejection.

17.6 EQUIPMENT.

17.6.1 Tank Construction. Tin plating tanks may be constructed of steel, stainless steel, rubber, or plastic. Steel tanks lined with polyvinyl chloride are recommended for economical construction and to prevent stray electrical currents.

17.6.2 Ventilation. The plating tank shall be equipped with a positive ventilation system capable of meeting or exceeding the ventilation requirements of AFOSHSTD 48-2.

17.6.3 Filtration. Filtration of the solution is unnecessary and may remove some of the constituents of the solution. Periodic desludging may be necessary to remove precipitated impurities.

17.6.4 Agitation. Solution agitation during plating is not recommended as this will cause sludge to become suspended in the solution and cause rough plating. Mild part movement may be of benefit.

17.6.5 Anodes. The anode system consists of anodes suspended in bays connected to the positive terminal of the power supply. The anode may be constructed of pure tin, alloyed with 1% aluminum, steel, nickel alloys, or stainless steel. The shape may be flat, corrugated, elliptical, rectangular, or round. If ball anodes are used, they may be contained in either steel or titanium baskets. Anode to cathode area should be maintained at a 1:1: ratio.

17.6.6 Power Source. Electrodeposition requires Direct Current (DC) which can be supplied from either generators or rectifiers. Most plating solutions operate between 0 and 14 volts. However if plating is to be done on large parts at high current densities and with large anode-cathode distances, increased voltage may be necessary. Ripple value as measured with a true RMS voltmeter connected across the anode and cathode buss at the tank shall not exceed 10% of the DC operating voltage. Power sources will be certified semi-annually. Certification shall include a check of ripple, proper functioning of controls, and accuracy of all meters, counters, and timers which are integral parts of the power source.

17.7 BATH CHARACTERISTICS.

WARNING

Many plating solutions produce toxic mist and vapors, some of which are cumulative in nature. Therefore, precautions should be taken to avoid inhalation of fumes and any contact with skin or clothing.

a. The tin plating solution is composed of sodium or potassium stannate, sodium or potassium hydroxide, sodium or potassium acetate, and hydrogen peroxide. The stannate provides the metallic ions. The hydroxide conducts the current, stabilizes the stannate against hydrolysis, and promotes anode corrosion. The acetate helps regulate the alkali content and the hydrogen peroxide oxidizes stannite to stannate. The most critical constituent is the hydroxide which must be closely controlled for proper operation of the bath.

b. The bath operates at a temperature between 71°C (160°F) and 82°C (180°F) and at a current density of 1.1 – 4.3 A/dm^2 (10 – 40 ASF). Cathode efficiency ranges between 60 and 90% depending on bath composition, temperature, and current density. The bath has good throwing power and covering power.

c. The most important single factor in the operation of stannate baths is the control of the film on the anodes. During operation soluble anodes must at all times be covered by a typical greenish-yellow film. This film insures that the tin in the anodes is being dissolved as stannate or tetravalent tin. If the film is lost or fails to form, the tin dissolves as stannite or bivalent tin, the presence of which causes rough, poorly adhering, dark deposits. The necessary film is formed by the application of a higher current density than required for normal operations. It is evidenced by a sudden increase in voltage and a sudden decrease in amperage. Gassing around the anodes is also noticeable. If difficulty is experienced in producing the film, it may be necessary to remove anodes from the tank until the anode to cathode area is at a 1:1 ratio. Gray or white anodes with no film indicates not enough current is being applied to form the film. A brown or black film or excessive gassing indicates the current density is too high, the temperature too low, or the free alkali too low to form the typical film.

If insoluble (inert) anodes are used, the plated out tin must be replaced by chemical additions of stannate or a stannic oxide solution. In case either sodium or potassium stannate is used, there will be an increase in free hydroxide which must be neutralized. When neutralizing, the hydroxide group is disposed of but not the accompanying alkali metal ions. With repeated additions, the alkali metal concentration becomes so high that the solution must be discarded and a new one formulated. The alkali metal build-up can be eliminated by making additions with a stannic oxide solution. This solution contains a small amount of potassium but the normal DRAG OUT will keep the solution within control limits.

d. Either sodium or potassium ends can be used in the formulation of the plating bath. Potassium stannate offers several advantages such as higher cathode efficiency, higher conductivity, and greater freedom in bath formulations due to the increased solubility of the potassium salt. Both tin salts are subject to the production of insoluble sludge, however potassium baths are more resistant to this decomposition.

The choice between sodium and potassium depends on a balancing of the superior operating properties of the potassium bath against the low chemical cost of the sodium. Where speed is not essential the sodium bath will serve as well.

If chemical additions are to be made with a stannic oxide solution, the bath must be formulated using potassium salts.

e. In general, increases in bath temperatures increase bath efficiency and conductivity. Increases in free caustic content decrease efficiency and increase conductivity. Increases in stannate content increase efficiency and decrease conductivity. Increases in current density increase bath efficiency.

f. The bath is generally easy to control if the hydroxide content and the density are properly maintained.

Table 17-1. Tin Stripping Procedure

Step	Operation	Time	Solutions, Materials, and Current	Temp °C	Temp °F
1	Vapor degrease. **WARNING** Solvent vapors are toxic. Avoid inhalation of vapors or contact with skin or clothing.	As Req'd	ASTM D4081 and ASTM D4376 (Tetrachloroethylene) Alternates:	120 – 124	248 – 256
			ASTM D4080 (Trichloroethylene) **NOTE** Not to be used where prohibited by state regulations.	88 – 90	187 – 194
2	Mask for stripping if necessary.	As Req'd			
3	Strip old plating.	As Req'd	From steel C-109 6 volts anodic Alternates:	52 – 57	125 – 135
			C-106 Immersion Only	49 – 54	120 – 130
			From copper alloys C-111 Immersion Only	Room	Room
			From aluminum alloys C-120 Immersion Only	Room	Room
4	Rinse.	As Req'd	Water	Rm – 82	Rm – 180
5	Examine for completeness of strip. Repeat Steps 3 through 5 if necessary.	As Req'd			
6	Remove masking.	As Req'd			
7	Rinse.	As Req'd	Water	49 – 82	120 – 180
8	Dry.	As Req'd	Shop Air	Room	Room
9	Preserve ferrous parts with corrosion prevention compound if necessary.	As Req'd	MIL-PRF-16173, Grade 3 Alternates:	Room	Room
			MIL-C-82594	Room	Room
			MIL-PRF-32033	Room	Room

Table 17-2. Tin Electrodeposition on Aluminum Alloys

Step	Operation	Time	Solutions, Materials, and Current	Temp °C	Temp °F
1	Strip anodize if necessary.	As Req'd	C-116 Immersion Only	71 – 82	160 – 180
2	Prepare part for plating.	As Req'd	Table 2-2		
3	Alkaline clean.	1 – 2 min	C-202 Immersion Only Alternates:	52 – 57	125 – 135
			C-205 Immersion Only	52 – 57	125 – 135
4	Rinse. **NOTE** Vigorous agitation must be used on Steps 4 through 15.	30 – 60 sec	Water	Room	Room
5	Etch.	10 – 30 sec	C-311 Immersion Only	Room	Room
6	Rinse.	30 – 60 sec	Water	Room	Room
7	Etch.	10 – 30 sec	C-316 Immersion Only Alternates:	Room	Room
			C-304 Immersion Only	Room	Room
8	Rinse.	30 – 60 sec	Water	Room	Room
9	Zincate.	30 sec	C-410 Immersion Only	21 – 24	70 – 75
10	Strip Zincate.	5 – 20 sec	C-311 Immersion Only Alternates:	Room	Room
			C-310 Immersion Only	Room	Room
11	Rinse.	30 – 60 sec	Water	Room	Room
12	Etch.	10 – 30 sec	C-316 Immersion Only Alternates:	Room	Room
			C-304 Immersion Only	Room	Room
13	Rinse.	30 – 60 sec	Water	Room	Room
14	Zincate.	30 – 60 sec	C-410 Immersion Only	21 – 24	70 – 75

Table 17-2. Tin Electrodeposition on Aluminum Alloys - Continued

Step	Operation	Time	Solutions, Materials, and Current	Temp °C	Temp °F
15	Rinse. **NOTE** If anodes are to be attached, they must be installed while part is submerged in water. Part must be kept wet between steps.	30 – 60 sec	Water	Room	Room
16	(OPTIONAL STEP) Copper strike. Current to be ON when immersing or withdrawing parts.	4 – 7 min	C-472 Use 2.6 A/dm^2 (24 ASF) for 2 minutes, then reduce to 1.3A/dm^2 (12 ASF) for remainder of strike time.	38 – 54	100 – 130
17	Rinse.	30 – 60 sec	Water	Room	Room
18	Tin plate. Current to be ON when immersing parts.	As Req'd	C-420 1.1 – 4.3 A/dm^2 (10 – 40 ASF)	71 – 82	160 – 180
			C-440 2.7 – 13.5 A/dm^2 (25 – 125 ASF) or	21 – 43	70 – 110
			C-465 0.5 – 10.8 A/dm^2 (5 – 100 ASF)	77 – 88	170 – 190
19	Rinse.	As Req'd	Water	Rm – 82	Rm – 180
20	Remove masking.	As Req'd			
21	Remove stains if necessary.	As Req'd	Pumice and cotton		
22	Rinse.	As Req'd	Water	49 – 82	120 – 180
23	Dry.	As Req'd	Shop Air	Room	Room
24	Inspect tin deposit. **NOTE** An acceptable tin deposit shall be adherent, lustrous, flat, smooth, continuous, and free from blisters, pits, nodules, deep scratches, indications of burning, or other harmful defects.	As Req'd			

Table 17-2. Tin Electrodeposition on Aluminum Alloys - Continued

Step	Operation	Time	Solutions, Materials, and Current	Temp °C	Temp °F
25	Bake, unless otherwise specified, all parts.	1 hr MIN		191 ± 14	375 ± 25
26	Reinspect plated deposit.	As Req'd			
27	Preserve with corrosion prevention compound if necessary.	As Req'd	MIL-PRF-16173, Grade 3 Alternates:	Room	Room
			MIL-C-82594	Room	Room
			MIL-PRF-32033	Room	Room

Table 17-3. Tin Electrodeposition on Steel

Step	Operation	Time	Solutions, Materials, and Current	Temp °C	Temp °F
1	Stress relieve all steel parts which have been machined, ground, cold-formed, or cold-straightened.	3 hrs MIN		191 ± 14	375 ± 25
2	Prepare part for plating.	As Req'd	Table 2-2		
3	Alkaline clean. Current to be OFF when immersing or withdrawing parts.	1 – 3 min	C-201 3 – 6 Volts Anodic Alternates:	52 – 57	125 – 135
			C-203 or C-210 3 – 6 Volts Anodic	52 – 57	125 – 135
			C-204 3 – 6 Volts Periodic reverse cycle, 10 sec anodic, 10 sec cathodic. End on anodic cycle.	52 – 57	125 – 135
4	Rinse.	15 – 60 sec	Water	Room	Room
5	Etch.	30 – 60 sec	C-301 Immersion Only Alternates:	Room	Room
			C-308 21.5 A/dm^2 (200 ASF) Anodic	Room	Room
			C-315 Immersion Only	Room	Room
6	Rinse.	15 – 60 sec	Water	Room	Room
7	Tin plate.	As Req'd	C-420 1.1 – 4.3 A/dm2 (10 – 40 ASF) Alternates:	71 – 82	160 – 180

Table 17-3. Tin Electrodeposition on Steel - Continued

Step	Operation	Time	Solutions, Materials, and Current	Temp °C	Temp °F
			C-465 0.5 – 10.8 A/dm^2 (5 – 100 ASF)	77 – 88	170 – 190
			C-440 2.7 – 13.5 A/dm^2 (25 – 125 ASF)	21 – 43	70 – 110
8	Rinse.	As Req'd	Water	Rm – 82	Rm – 180
9	Remove masking.	As Req'd			
10	Remove stains if necessary.	As Req'd	Pumice and cotton		
11	Rinse.	As Req'd	Water	49 – 82	120 – 180
12	Dry.	As Req'd	Shop Air	Room	Room
13	Inspect tin deposit. **NOTE** An acceptable tin deposit shall be adherent, lustrous, flat, smooth, continuous, and free from blisters, pits, nodules, deep scratches, indications of burning, or other harmful defects.	As Req'd			
14	Bake, unless otherwise specified, all steel parts having a hardness of Rockwell C 40 or above. **NOTE** Embrittlement relief will be initiated within 4 hours of plating.	1 hr MIN		191 ± 14	375 ± 25
15	Reinspect tin deposit.	As Req'd			
16	Preserve ferrous parts with corrosion prevention compound if necessary.	As Req'd	MIL-PRF-16173, Grade 3 Alternates:	Room	Room
			MIL-C-82594	Room	Room
			MIL-PRF-32033	Room	Room

Table 17-4. Tin Electrodeposition on Copper and Copper Base Alloys

Step	Operation	Time	Solutions, Materials, and Current	Temp °C	Temp °F
1	Prepare for plating.	As Req'd	Table 2-2 C-210 (3 – 6 Volts cathodic)	52 – 57	125 – 135
2	Alkaline clean. Current to be OFF during immersion or withdrawal of part.	30 – 90 sec	C-203 (3 – 6 Volts cathodic)	52 – 57	125 – 135
3	Rinse.	15 – 60 sec	Water	Room	Room
4	Acid dip.	20 – 30 sec	C-301	Room	Room
5	Rinse.	15 – 60 sec	Water	Room	Room
6	Copper strike. Current to be ON during immersion or withdrawal of part.	3 – 5 min	C-411 (1.6 – 4.8 A/dm^2, 15 – 45 ASF)	49 – 54	120 – 130
7	Nickel strike.	4 – 8 min	C-403 (3.8 – 7.5 A/dm^2, 35 – 70 ASF)	Room	Room
8	Rinse.	15 – 60 sec	Water	Room	Room
9	Silver strike. Current to be ON during immersion or withdrawal of part.	20 – 30 sec	C-417 (1.6 – 3.8 A/dm^2, 15 – 35 ASF)	Room	Room
10	Tin plate.	As Req'd	C-420 (1.1 – 4.3 A/dm^2, 10 – 40 ASF)	71 – 82	160 – 180
11	Rinse.	15 – 60 sec	Water	Room	Room
12	Dry.	As Req'd	Shop Air	Room	Room
13	Remove masking.	As Req'd			
14	Remove stains.	As Req'd	Pumice and cotton		
15	Inspect deposit. **NOTE** An acceptable tin deposit shall be smooth, adherent, lustrous, flat, continuous, and free from blisters, pits, nodules, deep scratches, indications of burning, and other harmful defects.	As Req'd			

Table 17-5. Plating Speed at 70% Cathode Efficiency

Average Thickness in Inches	A/dm^2 (ASF)						
	1.1 (10)	1.6 (15)	2.2 (20)	2.7 (25)	3.2 (30)	3.8 (35)	4.3 (40)
0.00001	1.3	0.9	0.7	0.5	0.4	0.4	0.3
0.00002	2.7	1.8	1.3	1.1	0.9	0.8	0.7
0.00003	4.0	2.7	2.0	1.6	1.3	1.1	1.0
0.00004	5.4	3.6	2.7	2.1	1.8	1.5	1.3
0.00005	6.7	4.5	3.4	2.7	2.2	1.9	1.7
0.00006	8.0	5.4	4.0	3.2	2.7	2.3	2.0
0.00007	9.4	6.3	4.7	3.8	3.1	2.7	2.3
0.00008	10.7	7.1	5.4	4.3	3.6	3.1	2.7
0.00009	12.1	8.0	6.0	4.8	4.0	3.4	3.0
0.0001	13.4	8.9	6.7	5.4	4.5	3.8	3.4
0.0002	26.8	17.9	13.4	10.7	8.9	7.7	6.7
0.0003	40.2	26.8	20.1	16.1	13.4	11.5	10.1
0.0004	53.6	35.7	26.8	21.4	17.9	15.3	13.4
0.0005	67.0	44.7	33.5	26.8	22.3	19.1	16.8
0.0006	80.4	53.6	40.2	32.2	26.8	23.0	20.1
0.0007	93.8	62.5	46.9	37.5	31.3	26.8	23.5
0.0008	107.2	71.5	53.6	42.9	35.7	30.6	26.8
0.0009	120.6	80.4	60.3	48.2	40.2	34.5	30.2
0.001	134.0	89.3	67.0	53.6	44.7	38.3	33.5
	Time in Minutes						

CHAPTER 18
TITANIUM-CADMIUM ELECTRODEPOSITION

18.1 PURPOSE.

This chapter provides instructions for the application of a Titanium-Cadmium (Ti-Cd) alloy. This is a patented process and all Ti-Cd electrodeposition must be performed by licensed vendors. American licensing arrangements are made through Delta Processes, Inc., 160 NW Gillman Blvd., Issaquah, WA 98027.

18.2 GENERAL.

a. Ti-Cd is a frosty white, semi-hard, codeposited alloy which contains from 0.07 to 0.5% titanium by weight.

b. Its major application is for the low hydrogen embrittlement corrosion protection for high strength steels. In addition to providing good corrosion protection, the deposit resists surface oxidation. As a result, the formation of surface discoloration and corrosion products is reduced. The coating also provides a good bonding surface and one that is easily soldered.

18.3 PLATING APPLICATION.

a. This process is not authorized for use on steel heat treated above 240,000 psi without the approval of the applicable engineering department.

b. Unless otherwise specified, the plating shall be applied after all basis metal heat treatments and mechanical operations such as machining, brazing, welding, forming, and perforating of the article have been completed.

c. Parts stress relieved before application of a prior plate such as chromium or nickel shall not be stress relieved again until after Ti-Cd plated, unless they have been subjected to any of the operations listed above.

d. The basis metal shall be free from visible defects that will be detrimental to the protective value of the plating or intended use of the article.

18.4 UNDERPLATING.

Unless otherwise specified, the plating shall be deposited directly on the basis metal, except in the case of parts made of corrosion resistant steel, on which a preliminary flash of nickel is permissible.

18.5 PLATING.

The plating shall be smooth, fine-grained, adherent, uniform in appearance, and free from blisters, pits, nodules, excessive edge build-up, and other defects detrimental to the intended use of the article. The size and number of contact marks shall be at a minimum consistent with good practice. The location of contact marks shall be in areas of minimum exposure to service environmental conditions. Superficial staining resulting from rinsing or baking operations will not be cause for rejection.

18.6 EQUIPMENT.

18.6.1 Tank Construction. The plating tank may be constructed of 300 series stainless steel or carbon steel lined with rigid polyvinyl chloride or other suitable lining.

18.6.2 Ventilation. The plating tank shall be equipped with a positive ventilation system capable of meeting or exceeding the ventilation requirements of AFOSHSTD 48-2.

18.6.3 Filtration. Adequate filtration is essential to the proper operation of this plating solution. This filtration equipment must be 300 series stainless steel, or an approved type lined construction such as rigid P.V.C., Saran lined pipe, or polypropylene. Size of the equipment should be such as to allow complete turnover of the solution in the tank at the rate of 2 to 3 times per hour. The filter medium should be polypropylene, nylon, or other approved materia1. The filtration system should incorporate a slurry tank, feeding into the filter intake, for the purposes of introducing the titanium compound onto the filter element. Precautionary measures should be taken to maintain the filter to allow no air leakage into the filter.

NOTE

Extreme care must be taken to insure that no organic materials, such as plasticized P.V.C., are allowed to be in contact with the plating solution.

18.6.4 Agitation. Mild mechanical agitation shall be provided if deposits contain pits resulting from the accumulation of gas bubbles on the surface of the article being plated.

18.6.5 Anodes. The anode system consists of cadmium bar anodes or cadmium ball anodes contained in titanium or 300 series stainless steel carriers suspended in bays and connected to the positive terminal of the power supply. Steel anode containers cannot be used and if cadmium bar anodes are used, they must not contain a central steel spline. Anode hooks shall be titanium or plastisol coated.

Auxiliary conforming or internal anodes may be constructed of cadmium or 300 series stainless steel. Cadmium anode material shall meet or exceed requirements of Federal Specification A-A-51126. Anode to cathode area should be maintained at a ratio of 1:1.

18.6.6 Power Source. Electrodeposition requires Direct Current (DC) which can be supplied from either generators or rectifiers. Most plating solutions operate between 0 and 14 volts. However if plating is to be done on large parts at high current densities and with large anode-cathode distances, increased voltage may be necessary. Ripple value as measured with a true voltmeter connected across the anode and cathode buss at the tank shall not exceed 10% of the DC operating voltage. Power sources will be certified semi-annually. Certification shall include a check of ripple, proper functioning of controls, and accuracy of all meters, counters, and timers which are integral parts of the power source.

18.7 BATH CHARACTERISTICS.

WARNING

Many plating solutions produce toxic mist and vapors, some of which are cumulative in nature. Therefore, precautions should be taken to avoid inhalation of fumes and any contact with skin or clothing.

a. The control procedures developed for successful operation of the Delta Cadmium plating process deviate only in a minor degree from normal electroplating methods. The limits on metal content, total cyanide, current density, etc., differ only slightly from those used in conventional cadmium cyanide plating baths.

b. For optimum low hydrogen embrittlement characteristics, it is essential that precautionary measures be used to keep the plating solution free from organic and excessive foreign metal contamination.

c. The use of deionized water for both bath makeup and maintenance of the Delta Cadmium solutions is mandatory.

d. Since excessive foreign metal contamination of the plating solution has proven to adversely affect the stability of the solution, titanium or stainless steel anode containers are employed. A filter system keeps the plating solution clean and serves as the means by which titanium is introduced into the solution. An activated titanium compound is deposited as a filter cake on the filter element. Hydrogen peroxide is added to the plating solution and reacts with the titanium compound to form a semi-stable salt which is soluble in the plating solution. The actual concentration of titanium in the bath is determined by the amount of hydrogen peroxide added to the system as well as the quantity of active compound on the filter cake.

e. Due to the unknown quantities of impurities and contaminants involved, under no circumstances should conversion of presently operating cadmium solutions be attempted.

f. The still plating bath operates at a temperature of 15 – 29°C (60 – 85°F) and at a current density of 15 – 50 ASF. The barrel plating bath operates at the same temperature but with a current density of 1.1 – 3.2 A/dm ^{2} (10 – 30 ASF).

g. Controlling Titanium Content - under normal operating conditions, the titanium component in the solution will tend to slowly precipitate as the hydrogen peroxide is dissipated. This titanium precipitate will be picked up by the filter so as to be available for reintroduction into the solution when additional hydrogen peroxide is added. At all times, when the Delta Cadmium solutions are shut down, or inoperable for a period of 6 – 12 hours, it is advisable to discontinue filtration so as to allow the titanium precipitate to remain in the bath, inducing a cloudy or opaque appearance. THIS WILL PERMIT A MORE RAPID RE-BUILDUP OF TITANIUM CONTENT WHEN HYDROGEN PEROXIDE ADDITIONS ARE STIRRED INTO THE BATH PRIOR TO RESUMING OPERATIONS. In most cases, it is necessary to add peroxide to the solution only ½ hour before resuming filtration in order to effect maximum rate of titanium buildup. After 30 – 60 minutes of filtration, check solution for titanium content. When titanium content fails to come up to control limits, following normal additions of hydrogen peroxide, additional titanium stock solution should be added to the filter element.

h. Analyze the bath for titanium content as often as required to maintain the prescribed condition, but not less than once each 8-hour shift. Daily additions of 3 to 6 ounces maximum of hydrogen peroxide per 100 gallons of plating solution should maintain the bath within control limits. The exact amount of hydrogen peroxide added daily to maintain titanium concentration is governed by variable conditions which exist in the individual plating bath. Additions of hydrogen peroxide in excess of quantities required to bring available titanium into solution, is detrimental to operating economy and optimum coating characteristics.

Table 18-1. Titanium-Cadmium Stripping Procedure

Step	Operation	Time	Solutions, Materials, and Current	Temp °C	Temp °F
1	Vapor degrease. **WARNING** Solvent vapors are toxic. Avoid inhalation of vapors or contact with skin or clothing.	As Req'd	ASTM D4081 and ASTM D4376 (Tetrachloroethylene) Alternates:	120 – 124	248 – 256
			ASTM D4080 (Trichloroethylene) **NOTE** Not to be used where prohibited by state regulations.	88 – 90	187 – 194
2	Mask for stripping if necessary.	As Req'd			
3	Strip old plating.	As Req'd	From steel C-102 Immersion Only Alternates:	Room	Room
			C-101 2 – 4 Volts Anodic	Rm – 71	Rm – 160
4	Rinse.	As Req'd	Water	Rm – 87	Rm – 180
5	Examine for completeness of strip. Repeat Steps 3 through 5 if necessary.	As Req'd			
6	Remove masking.	As Req'd			
7	Rinse.	As Req'd	Water	49 – 87	120 – 180
8	Dry.	As Req'd	Shop Air	Room	Room
9	Preserve ferrous parts with corrosion prevention compound if necessary.	As Req'd	MIL-PRF-16173, Grade 3 Alternates:	Room	Room
			MIL-C-82594	Room	Room
			MIL-PRF-32033	Room	Room

Table 18-2. Titanium-Cadmium Electrodeposition

Step	Operation	Time	Solutions, Materials, and Current	Temp °C	Temp °F
1	Stress relieve all ferrous parts having a hardness of Rockwell C 40 or above.	MIN 4 hrs		191 ± 14	375 ± 25
2	Prepare part for plating. **NOTE** If plating tank is occupied, immerse in cyanide holding tank until ready to plate. Maximum holding time is 4 hours.	As Req'd	Table 2-2		
3	Rinse.	As Req'd	Water	Room	Room
4	Etch.	5 – 30 sec	C-313 Immersion Only Alternates:	Room	Room
			C-314 Only	Room	Room
5	Rinse.	15 – 60 sec	Water	Room	Room
6	Titanium-cadmium plate. Current to be ON when immersing or withdrawing parts.	As Req'd	C-431 Strike part at 4.3 – 5.4 A/dm^2 (40 – 50 ASF) for 30 – 60 seconds, then reduce to 2.2 – 3.3 A/dm^2 (20 – 30 ASF) for required time.	15 – 29	60 – 85
7	Rinse.	As Req'd	Water	Room	Room
8	Chromate coat.	60 sec	C-435 Immersion Only	Room	Room
9	Rinse.	As Req'd	Water	49 – 71	120 – 160
10	Dry.	As Req'd	Shop Air	Room	Room
11	Inspect plated deposit. **NOTE** An acceptable titanium cadmium coating shall be smooth, fine-grained, adherent and free from blisters, pits, nodules, pin holes, or other defects detrimental to the performance of the article.	As Req'd			

Table 18-2. Titanium-Cadmium Electrodeposition - Continued

Step	Operation	Time	Solutions, Materials, and Current	Temp °C	Temp °F
12	Unless otherwise specified, bake all parts. **NOTE** Embrittlement relief will be initiated within 4 hours of plating.	23 Hrs MIN		191 ± 14	375 ± 25
13	Rinse.	As Req'd	Water	Room	Room
14	(TYPE II TREATMENT ONLY) Chromate treatment.	15 – 30 sec	C-435 Immersion Only	Room	Room
15	(TYPE III TREATMENT ONLY) Phosphate treatment.	15 – 30 sec	C-436 Immersion Only	Room	Room
16	Rinse.	As Req'd	Water	Room	Room
17	Rinse.	As Req'd	Water	49 – 71	120 – 160
18	Dry.	As Req'd	Shop Air	Room	Room
19	Reinspect plated deposit.	As Req'd			
20	Preserve with corrosive preventive compound if necessary.	As Req'd	MIL-PRF-16173, Grade 3 Alternates:	Room	Room
			MIL-C-82594	Room	Room
			MIL-PRF-32033	Room	Room

CHAPTER 19
ZINC ELECTRODEPOSITION

19.1 PURPOSE.

This chapter provides instructions for the electrodeposition of zinc. The resulting deposit will meet or exceed the requirements of Specification ASTM B633.

19.2 GENERAL.

a. Zinc is a semi-hard, bluish-white metal used mainly for the protection of iron and steel from corrosion. It is anodic to ferrous materials and protects the basis metal by sacrificial means; therefore, the protective life of zinc is directly proportional to its thickness. It has poor abrasion and wear resistance but will operate satisfactorily where mild abrasion or erosion is encountered.

b. Zinc is easy to apply and is the cheapest metallic coating that can be applied to ferrous metals. It is frequently applied for both indoor and outdoor applications. In normal indoor atmospheres, zinc gives excellent protection but rapidly deteriorates in warm, humid, stagnant, or chemical laden environments. Zinc's rate of corrosion is highest in industrial areas, in marine environments, and where frequent limited moisture (dew, fog, etc.) is present.

c. Supplemental coatings of chromate and phosphate are frequently applied after zinc plating to retard corrosion and produce a paint base. Chromate coatings should never be used where parts are subjected to temperatures in excess of 66°C (150°F).

d. Zinc should not be used where constantly submerged in aqueous solutions and must not be used around food products.

19.3 PLATING APPLICATION.

a. Unless otherwise specified, the plating shall be applied after all basis metal heat treatments and mechanical operations such as machining, brazing, welding, forming, and perforating of the article have been completed.

b. The basis metal shall be free from visible defects that will be detrimental to the appearance or protective value of the plating or intended use of the item.

19.4 UNDERPLATING.

Unless otherwise specified, zinc shall be deposited directly on the basis metal without a preliminary coating of other metal except in the case of corrosion-resistant steels on which a preliminary coating of nickel is permissible.

19.5 PLATING.

The zinc deposit shall be smooth, fine-grained, adherent, uniform in appearance, and be free from blisters, cracks, pits, nodules, indications of burning, and other defects. Superficial staining which resulted from rinsing or heat treatments after plating shall not be cause for rejection.

19.6 EQUIPMENT.

19.6.1 Tank Construction. Zinc plating tanks can be constructed of low carbon steel, stainless steel, glass, rubber, or plastic. A low carbon steel tank lined with polyvinyl chloride is recommended for low cost construction and prevention of stray currents.

19.6.2 Ventilation. The plating tank shall be equipped with a positive ventilation system capable of meeting or exceeding the ventilation requirements of AFOSHSTD 48-2.

19.6.3 Filtration. Continuous filtration should be provided to the plating solution. Filtration should be sufficient to allow one complete turnover of solution every 4 hours.

19.6.4 Agitation. Moderate agitation of the cathode should be provided during plating to produce high quality plating.

19.6.5 Anodes.

a. The anodes system consists of high purity zinc anodes suspended in bays connected to the positive terminal of the power supply. Auxiliary conforming anodes may be of benefit when plating parts with complex configurations. Zinc cyanide baths are highly sensitive to heavy impurities; therefore only high purity 99.99% zinc anodes should be employed. These high purity anodes are available in cast or extruded elliptical bars or as cast balls or extruded cylinders.

b. Because of chemical and electrochemical influences, anode efficiency exceeds 100%. This efficiency can be reduced by the addition of small amounts of aluminum, calcium, or magnesium to the anode. It is also good practice to remove the anodes from the solution during periods of inactivity.

c. Anode to cathode area should be maintained at a 2:1 ratio.

d. The anodes should be bagged to prevent anode sludge from entering the solution and causing rough zinc deposit.

19.6.6 Power Source. Electrodeposition requires Direct Current (DC) which can be supplied from either generators or rectifiers. Most plating solutions operate between 0 and 14 volts. However if plating is to be done on large parts at high current densities and with large anode-cathode distances, increased voltage may be necessary. Ripple value as measured with a true RMS voltmeter connected across the anode and cathode buss at the tank shall not exceed 10% of the DC operating voltage. Power sources will be certified semi-annually. Certification shall include a check of ripple, proper functioning of controls, and accuracy of all meters, counters, and timers which are integral parts of the power source.

19.7 BATH CHARACTERISTICS.

WARNING

Many plating solutions produce toxic mist and vapors, some of which are cumulative in nature. Therefore, precautions should be taken to avoid inhalation of fumes and any contact with skin or clothing.

a. The zinc cyanide bath is composed of zinc cyanide, sodium cyanide, sodium hydroxide, and sodium polysulfide. The zinc cyanide supplies the metallic ions; the sodium cyanide promotes brightness, good adhesion, and anode corrosion; the sodium hydroxide promotes anode corrosion and higher plating speeds and the sodium polysulfide is added for purification of the new bath and precipitation of impurities thereafter.

b. The bath operates at a temperature between 23 – 38°C (75 – 100°F), a current density of 1.6 – 5.4 A/dm^2 (10 – 50 ASF), and a sodium cyanide to zinc ratio of 2.7 – 3.0:1. Cathode efficiency ranges between 65 and 85% and is influenced by metal, cyanide, and hydroxide concentration.

c. The bath is somewhat difficult to control. The concentration of bath constituents may vary but the ratio of total cyanide to zinc must be closely maintained. The bath is usually controlled by maintaining the sodium hydroxide and adjusting the ratio of cyanide to zinc. If zinc and hydroxide are low and cyanide is satisfactory, make addition of zinc oxide rather than zinc cyanide. Low temperatures decrease efficiency and increase throwing power and deposit brightness while high temperatures increase efficiency, decrease throwing power, and produce dull frosty white deposits. High temperature also rapidly decomposes cyanide to form carbonates which have a detrimental effect on the bath. High metallic zinc, sodium hydroxide, and increased concentrations of all constituents increase bath efficiency while high cyanide, high current densities, and high CN:Zn ratio decrease bath efficiency and produce dull deposits.

d. Deposit brightness is regulated by maintenance of bath purity, concentration, proper cyanide to zinc ratio, current density, and temperature.

Table 19-1. Zinc Stripping Procedure

Step	Operation	Time	Solutions, Materials, and Current	Temp °C	Temp °F
1	Vapor degrease. **WARNING** Solvent vapors are toxic. Avoid inhalation of vapors or contact with skin or clothing.	As Req'd	ASTM D4081 and ASTM D4376 (Tetrachloroethylene) Alternates:	120 – 124	248 – 256
			ASTM D4080 (Trichloroethylene) **NOTE** Not to be used where prohibited by state regulations.	88 – 90	187 – 194
2	Mask for stripping if necessary.	As Req'd			

Table 19-1. Zinc Stripping Procedure - Continued

Step	Operation	Time	Solutions, Materials, and Current	Temp °C	Temp °F
3	Strip old plating.	As Req'd	From Steel C-101 2 – 4 Volts Anodic Alternates:	Rm – 71	Rm – 160
			C-106 Immersion Only	49 – 54	120 – 130
			From Steel or Copper Alloys C-111 Immersion Only	Room	Room
			From Aluminum Alloys C-120 Immersion Only	Room	Room
4	Rinse.	As Req'd	Water	Rm – 82	Rm – 180
5	Examine for completeness of strip. Repeat Steps 3 thru 5 if necessary.	As Req'd			
6	Remove masking.	As Req'd			
7	Rinse.	As Req'd	Water	49 – 82	120 – 180
8	Dry.	As Req'd	Shop Air	Room	Room
9	Preserve ferrous parts with corrosion prevention compound if necessary.	As Req'd	MIL-PRF-16173, Grade 3 Alternates:	Room	Room
			MIL-C-82594	Room	Room
			MIL-PRF-32033	Room	Room

Table 19-2. Zinc Electrodeposition on Steel

Step	Operation	Time	Solutions, Materials, and Current	Temp °C	Temp °F
1	Stress relieve all steel parts having a hardness of Rockwell C 40 or above which have been machined, ground, cold-formed, or cold-straightened.	3 hrs MIN		191 ± 14	375 ± 25
2	Prepare part for plating.	As Req'd	Table 2-2		
3	Alkaline clean. Current to be OFF when immersing or withdrawing parts.	1 – 3 min	C-201 3 – 6 Volts Anodic Alternates:	52 – 57	125 – 135
			C-203 3 – 6 Volts Anodic	52 – 57	125 – 135

Table 19-2. Zinc Electrodeposition on Steel - Continued

Step	Operation	Time	Solutions, Materials, and Current	Temp °C	Temp °F
			C-204 3 – 6 Vo1ts Periodic reverse cycle, 10 sec anodic, 10 sec cathodic. End on anodic cycle.	52 – 57	125 – 135
4	Rinse.	15 – 60 sec	Water	Room	Room
5	Etch.	30 – 60 sec	C-301 Immersion Only Alternates:	Room	Room
			C-308 21.5 A/dm^2 (200 ASF) Anodic	Room	Room
			C-315 Immersion Only	Room	Room
6	Rinse.	15 – 60 sec	Water	Room	Room
7	Zinc plate.	As Req'd	C-424 1.6 – 5.4 A/dm^2 (15 – 50 ASF)	24 – 38	75 – 100
8	Rinse.	As Req'd	Water	Rm – 82	Rm – 180
9	Dry.	As Req'd	Shop Air	Room	Room
10	Remove masking.	As Req'd			
11	Inspect zinc deposit. **NOTE** An acceptable zinc deposit shall be smooth, continuous, adherent, uniform in appearance, and not coarsely crystalline and shall be free from pin holes, porosity, blisters, pits, nodules, indications of burning, and other harmful imperfections that may interfere with the normal function of the part. Slight discoloration resulting from rinsing or baking operations will not be cause for rejection.	As Req'd			
12	Bake as required. Rockwell C 40 or below. C 40 – C 43. C 43 – C 49. C 49 and above.	MIN Times — 3 hrs 8 hrs 23 hrs		191 ± 14	375 ± 25

Table 19-2. Zinc Electrodeposition on Steel - Continued

Step	Operation	Time	Solutions, Materials, and Current	Temp °C	Temp °F
	NOTE Embrittlement relief will be initiated within 4 hours of plating.				
13	Reinspect zinc deposit.	As Req'd			
14	(FOR TYPE II ONLY) Supplemental chromate treatment.	15 – 30 sec	C-435 Immersion Only	Room	Room
15	(FOR TYPE III ONLY) Supplemental phosphate treatment.	15 – 30 sec	C-436 Immersion Only	Room	Room
16	Rinse.	15 – 60 sec	Water	49 – 82	120 – 180
17	Dry.	As Req'd	Shop Air	Room	Room
18	Preserve ferrous parts with corrosion prevention compound if necessary.	As Req'd	MIL-PRF-16173, Grade 3 Alternates:	Room	Room
			MIL-C-82594	Room	Room
			MIL-PRF-32033	Room	Room

Table 19-3. Plating Speed at 98% Cathode Efficiency

Average Thickness in Inches	A/dm²							
	1.6 (15)	2.2 (20)	2.7 (25)	3.2 (30)	3.8 (35)	4.3 (40)	4.8 (45)	5.4 (50)
0.00001	0.6	0.4	0.3	0.3	0.2	0.2	0.2	0.2
0.00002	1.1	0.8	0.7	0.6	0.5	0.4	0.4	0.3
0.00003	1.7	1.3	1.0	0.8	0.7	0.6	0.6	0.5
0.00004	2.2	1.7	1.3	1.1	1.0	0.8	0.7	0.7
0.00005	2.8	2.1	1.7	1.4	1.2	1.1	0.9	0.8
0.00006	3.4	2.5	2.0	1.7	1.4	1.3	1.1	1.0
0.00007	3.9	2.9	2.4	2.0	1.7	1.5	1.3	1.2
0.00008	4.5	3.4	2.7	2.2	1.9	1.7	1.5	1.3
0.00009	5.0	3.8	3.0	2.5	2.2	1.9	1.7	1.5
0.0001	5.6	4.2	3.4	2.8	2.4	2.1	1.9	1.7
0.0002	11.2	8.4	6.7	5.6	4.8	4.2	3.7	3.4
0.0003	16.8	12.6	10.1	8.4	7.2	6.3	5.6	5.0
0.0004	22.4	16.8	13.4	11.2	9.6	8.4	7.5	6.7
0.0005	28.0	21.0	16.8	14.0	12.0	10.5	9.3	8.4
0.0006	33.6	25.2	20.2	16.8	14.4	12.6	11.2	10.1
0.0007	39.2	29.4	23.5	19.6	16.8	14.7	13.1	11.8
0.0008	44.8	33.6	26.9	22.4	19.2	16.8	14.9	13.4
0.0009	50.4	37.8	30.2	25.2	21.6	18.9	16.8	15.1
0.001	56.0	42.0	33.6	28.0	24.0	21.0	18.7	16.8
0.002	112.0	84.0	67.2	56.0	48.0	42.0	37.3	33.6
0.003	168.0	126.0	100.8	84.0	72.0	63.0	56.0	50.4
0.004	224.0	168.0	134.4	112.0	96.0	84.0	74.7	67.2
0.005	280.0	210.0	168.0	140.0	120.0	105.0	93.3	84.0
0.006	336.0	252.0	201.6	168.0	144.0	126.0	112.0	100.8
0.007	392.0	294.0	235.2	196.0	168.0	147.0	130.7	117.6
0.008	448.0	336.0	268.8	224.0	192.0	168.0	149.3	134.4
0.009	504.0	378.0	302.4	252.0	216.0	189.0	168.0	151.2
0.010	560.0	420.0	336.0	280.0	240.0	210.0	186.7	168.0
	Time in Minutes							

CHAPTER 20
ALUMINUM SURFACE TREATMENTS

20.1 PURPOSE.

This chapter provides instructions for the surface finishing of aluminum alloys. The resulting coating shall meet or exceed the requirements of (1) Specification MIL-A-8625 for anodized coatings, and (2) Specification MIL-C-5541 for chemical conversion coatings.

20.2 GENERAL.

a. Aluminum, when subjected to normal atmospheric conditions, tends to combine with oxygen to form a tenacious nonreactive barrier of aluminum oxide. Although this barrier is thin, it provides protection against corrosion. This principle is used to great advantage in the production of an oxide film in the presence of an electrolyte. The electrolyte, although not directly consumed, determines to a large extent the nature of the coating. This technique consists of a modification of the metal surface so that the formed coating is an integral part of the parent metal. The process of developing the oxide film is referred to as anodic oxidation, anodic treatments, or anodizing.

b. Anodizing comprises the electrochemical conversion of the surface of aluminum to aluminum oxide, with the part serving as the anode in an aqueous electrolyte, with the oxygen being provided by the electrolytic dissociation of water. During anodizing, oxidation takes place at the metal interface. Therefore, the first formed coating is continuously pushed away from the basis metal by newly formed oxide and hence is located at the extreme outer surface of the item being processed. During the process, the current tends to form oxide at the metal interface while the electrolyte tends to dissolve the oxide already formed. This process naturally lends itself to the production of porous coatings. The degree of porosity depends upon variables such as tank dwell time, electrolyte, and current used.

c. As a rule, most anodized coatings are sealed to make them nonabsorbent. Sealing is usually accomplished by treating the part in near boiling water, but it can also be accomplished by treating the part with a sodium dichromate or nickel acetate solution. This converts amorphous oxide to monohydrate which increases the volume of the coating. The resultant swelling action helps close the pores and decreases the surface area available for absorption. If parts are to be colored, dyeing must precede sealing.

d. There are four principle types of anodizing processes: (1) Chromic (Type I), in which chromic acid is the active agent; (2) Non-Chromic (Type IC), in which a mixture of boric and sulfuric acids is the active agent; (3) Sulfuric (Type II), in which sulfuric acid is the active agent; and (4) Hard Coat (Type III), in which sulfuric and oxalic acids are the active agents.

(1) Chromic acid (Type I) and sulfuric acid (Type II) anodic coatings are used to improve corrosion protection under severe service conditions; to improve adhesion; and serve as a foundation for organic finishes (paints, lacquers, etc.); provide electrical insulation; improve abrasion resistance; and detect surface flaws in parts. Porous coatings can be easily dyed, making possible a wide variety of decorative applications. In addition to colorants, it is possible to impregnate the porous films with chromates or silicates for increased corrosion resistance or to impregnate with light-sensitive materials.

(2) Non-chromic acid (Type IC) coatings provide an environmentally preferred alternative to other Type I coatings where corrosion resistance, paint adhesion, and fatigue resistance are required. Since hexavalent chromium compounds are carcinogenic, the Environmental Protection Agency (EPA) has promulgated controls on the emission of hexavalent chromium from electrolytic finishing operations such as chromic acid anodizing. The most effective hazardous minimization method is by source elimination. Boeing Company's proprietary BAC 5632 process, Boric/Sulfuric Acid Anodizing (BSAA), is a non-chromic acid anodizing process. BSAA is suitable for use as an environmental option for chromic acid anodizing per Specification MIL-A-8625, Type I (conventional process) and Type IB (low voltage process). Sulfuric acid anodize forms a thick and porous film and boric acid effectively suppresses the dissolution of aluminum. When the amount of 0.5 to 1.0% of boric acid is added to an aqueous solution of sulfuric acid, a harder film is produced; thus, addition of boric acid improves film performance in corrosion resistance and paint adhesion. BSAA is included in this manual as the Type IC process and is covered by US Patent No 4,894,127 (Method for Anodizing Aluminum) and US Patent No 4,504,325 (Method for Sealing on Aluminum

Oxide Film). Patent licensing requires the licensee to pay initial fees and annual fees. HQ AFMC has paid the one time initial fees for all Air Logistics Centers. Using activities must pay an annual fee which includes a 4% annual inflation escalator in the payment schedule. Activities wishing to use this process must contact Patent Licensing, PO Box 3999, MS 87-49, Boeing Defense and Space Group, Seattle, WA 98124, 206-773-4946, for licensing information. Each activity must pay the user's fees prior to implementation of the Type IC (BSAA) process.

(3) Hard coat (Type III) anodic coatings are used to improve wear and abrasion resistance; improve corrosion protection; provide electrical insulation; and form a foundation for paint systems, adhesives, and dry film lubricants. Generally, hard coatings should not be used on parts or portions of parts which normally, during reworks, require restoring of dimensional tolerances because of wear of hard coated surface.

20.3 ANODIZE APPLICATION.

a. The basis metal shall be sufficiently free from surface defects, caused by machining, cutting, scratching, polishing, buffing, roughening, bending, stretching, deforming, rolling, blasting, etching, and inclusions, which will be detrimental to the functional use of the coating.

b. Unless otherwise specified, parts and assemblies shall be anodized after all heat treating, machining, welding, forming, and perforating have been completed.

c. Parts which contain non-aluminum materials such as steel, brass or organic substances, which would be attacked by chemical or electrolytic brightening or anodizing solutions or would prevent the uniform formation of the anodic coating on the aluminum surfaces or cause attack of the aluminum alloy, shall not be anodized as assemblies, unless the non-aluminum surfaces are masked or electrically insulated in a manner which produces satisfactory anodized parts.

d. Unless otherwise specified, anodic coatings shall not be applied to assemblies which will entrap the electrolyte in joints or recesses. When coating of assemblies is not authorized, parts of assemblies shall be anodic coated before assembling.

e. Parts to be anodized shall be free of foreign substances, paint, and oxide prior to application of anodic coating.

f. Position parts so that gas cannot be trapped and prevent solution contact.

g. Position parts in a way to ensure good drainage.

h. Plug the ends of oxygen tubing.

i. Handle wet parts with clean latex rubber gloves.

j. Handle dry, anodized parts with clean cotton gloves.

k. Unless otherwise specified, chromic acid (Type I) and non-chromic acid (Type IC) anodize shall not be applied to aluminum alloys with a nominal copper content in excess of 5.0%, nominal silicon content in excess of 7.0%, or when the total allowable contents of nominal alloying elements exceed 7.5%. For Type I coatings, heat treatable alloys should be in a T-4 or T-6 heat treat condition prior to anodizing, as post heat treatments tends to destroy anodized coating. For Type IC coatings, heat treatable alloys shall be in the required temper obtained by heat treatment such as -T4, -T6, or -T73 prior to anodizing.

l. Unless otherwise specified, hard coat (Type III) anodize shall not be applied to aluminum alloys with a nominal copper content in excess of 5.0% or a nominal silicon content in excess of 8.0%.

m. Anodic coatings reduce the fatigue life of the substrate metal. Therefore, fatigue-critical items shall be shot peened or otherwise cold worked to induce a compressive layer prior to anodizing.

20.4 ANODIZED COATING.

The anodic coating shall be continuous, smooth, adherent, uniform in appearance, and shall be free from powdery areas, loose films, breaks, scratches, and other damage. The color of the coating will vary depending upon tank dwell time, electrolyte, and applied voltage. The size and number of contact marks shall be at a minimum consistent with good practice. The location of contact marks shall be in areas of minimum exposure to service environmental conditions. Differences in anodic coating appearance resulting from inherent base metal differences in the component such as the presence of welds, cast and machined surfaces, and variations in grain size within the forging shall not be cause to reject the anodic coating.

20.5 SEALING.

a. Chromic (Type I) and sulfuric (Type II) acid anodized surfaces which do not require dyeing will be sealed in a 5% solution of sodium dichromate for 15 minutes at 81 – 100°C (178 – 212°F); or boiling deionized water; or nickel or cobalt acetate. Those parts requiring dyeing shall be sealed in a hot aqueous solution containing nickel or cobalt acetate.

b. Non-chromic (Type IC) anodized surfaces shall be sealed in a dilute chromate solution at 90.6 ± 2.8°C (195 ± 5°F) for 23 to 28 minutes. Dry thoroughly. Drying temperature shall not exceed 71°C (160°F).

c. Hard coat (Type III) anodized surface shall not be sealed where the main function of application is to obtain the maximum degree of abrasion or wear resistance. Other Type III coatings shall be sealed in boiling deionized water, in hot aqueous 5% sodium dichromate, or in a hot aqueous solution containing either nickel or cobalt acetate.

20.6 EQUIPMENT.

20.6.1 Tank Construction.

a. Tanks for chromic acid anodizing may be constructed of low carbon steel; however, the tank should be lined with lead, koroseal, polyvinylchloride, or acid-proof brick to extend its life. Tanks for sulfuric and hard coat solutions may be low carbon steel but must be lined with lead, polyvinylchloride, rubber, or acid-proof brick.

b. The preferred material for non-chromic acid (Type IC) anodizing is 316L stainless steel; however, tanks may be constructed of polyvinyl chloride, polycarbonate, or polyester impregnated fiberglass. Use of 316L stainless steel or lead auxiliary cathodes is required for plastic tanks. The tank for the anodizing solution (C-474) shall be equipped with heating and cooling capabilities for maintaining the solution between 24 and 29°C (76 and 84°F).

20.6.2 Ventilation. The processing tanks shall be equipped with a positive ventilation system capable of meeting or exceeding the ventilation requirements of AFOSHSTD 48-2.

20.6.3 Agitation. Anodizing processes generate heat at the part-solution interface. This heat must be removed to provide uniform application of the oxide coating. Agitation can be provided by contamination-free air agitation, mechanically driven impellers, recirculation of solution through externally located pumps, or other mechanical means.

20.6.4 Cathodes. If tanks are made from type 316L stainless steel or lined with lead, the tank may serve as the cathode. Otherwise, auxiliary type 316L stainless steel or lead cathodes must be provided.

20.6.5 Temperature Control. Proper temperatures must be maintained at the interface of the work surface and the electrolyte. This operating temperature is usually controlled within ±2°C (±4°F). Chromic acid anodize solutions must be heated to 35 ± 2°C (95 ± 4°F). Non-chromic acid anodizing solutions shall be maintained between 24°C (76°F) and 29°C (84°F) by heating or cooling as needed. Sulfuric and hard anodizing solutions generally require cooling to 18 – 22°C (64 – 72°F) and 0 – 4°C (32 – 39°F). Heating and/or cooling coils may be constructed of lead, teflon, or stainless steel.

20.6.6 Racks and Fixtures.

a. Racks and fixtures should be designed for efficiency in loading and unloading parts. They should be designed by the following: (1) current carrying capacity, (2) positioning of parts to allow for good solution circulation around part, and (3) service life of rack material. They may be constructed of aluminum containing less than 5% copper or 7% silicon or of commercially pure titanium. Other materials may be used but they must be insulated from the electrolyte and the contacts must be either aluminum or titanium.

b. The anodize coating must be removed from the rack or at least the contacts before the rack can be reused.

20.6.7 Power Sources.

a. Direct current is required for all anodizing procedures. The electrical circuit requires a direct current generator or rectifier with controls for regulation of the current, a voltmeter, an ammeter, and necessary bus bars.

b. The following current capacities must be provided (some procedures require a superimposed AC):

1. Chromic Acid – 50 volts DC capable of 0.1 – 0.32 A/dm^2 (1 – 3 ASF)

2. Non-chromic Acid – 24 volts DC capable of 0.43 – 0.65 A/dm^2 (4 – 6 ASF)

3. Sulfuric Acid – 24 volts DC capable of 0.65 – 2.6 A/dm^2 (6 – 24 ASF)

4. Hard coat – 100 volts DC capable of 2.7 – 4.3 A/dm^2 (25 – 40 ASF)

c. Power sources will be certified semi-annually. Certification shall include a check of ripple, proper functioning of controls, and accuracy of all meters, counters, and timers which are integral parts of the power source.

20.6.8 Recorder. For non-chromic acid (Type IC) anodizing, a recorder for plotting voltage versus time is required. The rectifier recorder shall be certified to an accuracy of ±5% of specification mid-range for potential and anodize time.

20.7 BATH OPERATION.

20.7.1 Chromic Acid Anodizing.

a. The bath operates between 33 – 37°C (91 – 99°F) at a concentration between 3 and 10% and a pH of 0.5 – 0.85. Low voltage is applied to parts upon entry into the solution to minimize any initial current surge and possible arcing at contact points. The voltage is then slowly raised to 40 volts over a period of approximately 15 minutes. Thereafter the voltage is adjusted to maintain the current density above 0.1 A/dm^2 (1 ASF). Total anodizing time generally is between 45 and 60 minutes. Uniformity of temperature must be maintained to produce good results.

b. Chromic acid anodized coatings are relatively soft but exhibit good corrosion resistance. The color of the coating is light gray on pure aluminum but is dark gray to black on silicon and copper-bearing alloys. Thickness of the film is generally 0.0001 – 0.0002 inches.

c. Normal bath impurities are not critical; however, aluminum, chloride, and trivalent chromium concentration should be controlled. Aluminum and trivalent chromium tend to neutralize hexavalent chromium and chloride prevents film formation. Aluminum may be reduced by the use of stable cation resins or dilution of the solution. Trivalent chromium can be reduced by electrolyzing at 3 to 6 volts using large lead electrodes and reducing the cathode to anode area. Chloride can be controlled by using deionized or distilled water.

20.7.2 Non-Chromic Acid. The bath operates between 24 – 29°C (76 – 84°F) with a voltage range from 5 – 15 volts. Moderate agitation of the anodize solution is accomplished by air or mechanical stirring during the anodize cycle. Parts are lowered into the bath with current on or within two minutes of current application. An initial setting not greater than five volts is applied, followed by a rate of increase not to exceed five volts per minute until 15 ± 1 volts DC is reached. This step is critical to avoid burning parts. Parts are anodized for 18 to 22 minutes after reaching 15 ± 1 volts. Parts are removed from the anodizing tank within two minutes after current is stopped. Rinsing is begun within three minutes. Failure to do this can cause coating degradation. Coatings shall have a minimum weight of 200 mg/ft^2 and a maximum weight of 700 mg/ft^2.

20.7.3 Sulfuric Acid.

a. The sulfuric acid bath operates between 18 – 22°C (64 – 72°F) and at a current density of 0.6 – 2.6 A/dm ^{2} (6 – 24 ASF) and a voltage range from 12 – 22. The current is applied upon entry of the parts into the solution and gradually increased to desired current density. Anodizing time ranges from 15 – 60 minutes. The longer processing time is employed when parts are to be colored. The bath produces colorless films between 0.0002 and 0.0004 inches thick.

b. The purity of the aluminum greatly determines the density of the coating. Dense, harder coatings are produced on high purity aluminum, while less dense and softer coatings are produced on the heat treatable alloys that contain appreciable quantities of alloying elements.

20.7.4 Hard Anodizing. This bath operates at a temperature of 0 – 4°C (32 – 39°F) at a current density of 2.7 – 4.3 A/dm ^{2} (25 – 40 ASF) and a voltage range between 10 and 100. The current is applied upon entry of the part into the solution and the current gradually raised to the desired current density. Anodizing time is generally 20 – 60 minutes. Coating thickness of up to 0.008 inches can be produced. No hot water seal is to be used if the parts are anodized to produce an abrasion or wear surface.

20.8 CHEMICAL CONVERSION COATING.

20.8.1 General.

a. Chemical conversion coatings are adherent surface layers of low solubility oxide, phosphate, or chromate compounds produced on the surface of aluminum that converts the metal surface to a nonmetallic inert state.

b. These coatings are produced by a chemical oxidation-reduction reaction rather than by electrochemical reactions as are anodized coatings. They may be applied by brushing, dipping, spraying, wiping, or any other wetting method. The process is simple and equipment requirements are minimal. There is also no loss of fatigue life in the substrate metal. Where applicable, conversion coatings may be attractive alternates to anodizing. However, the coatings are thinner, more easily damaged, not as protective, and cleaning is critical if optimum appearance and properties are to be attained.

c. Conversion coatings are excellent for:

(1) Corrosion retardation under organic finishes or films.

(2) Improve adhesion of organic finishes.

(3) Providing corrosion retardation without changing electrical properties of item.

(4) Mild wear resistance.

(5) Decorative purposes.

(6) Repair of mechanically damaged areas of anodic coatings.

20.9 COATING APPLICATION.

Unless otherwise specified, the coating shall be applied after all basis metal heat treatments and mechanical operations such as machining, brazing, welding, forming, and perforation of the article have been completed. The basis metal shall be free from all defects which will be detrimental to the appearance, performance, or function of the coating.

20.10 COATING APPEARANCE.

a. The coating shall be as uniform in appearance as practical, shall be continuous and substantially free from powdery or loose film areas, and shall be free from breaks, scratches, and other defects which will reduce the serviceability of parts or be detrimental to appearance, protective value, and paint bonding. The color of the film may range from clear to yellow to brown.

b. Temperatures above 60°C (140°F) damage conversion coatings; therefore, do not apply conversion coatings to parts operating in exposure above this temperature.

20.11 EQUIPMENT.

20.11.1 Tank Construction. Tanks may be constructed of 304, 316 stainless steel or of mild steel lined with polyvinylchloride, polyethylene, polypropylene, or other suitable acid resistant material.

20.11.2 Ventilation. The conversion tank will be equipped with a positive ventilation system capable of meeting or exceeding the ventilation requirements of AFOSHSTD 48-2.

Table 20-1. Anodize Stripping Procedure

Step	Operation	Time	Solutions, Materials, and Current	Temp °C	Temp °F
1	Alkaline clean.	1 – 10 min	C-202 Immersion Only Alternates:	52 – 57	125 – 135
			C-205 Immersion Only	52 – 57	125 – 135
2	Rinse.	30 – 60 sec	Water	Room	Room
	Rinse for parts with open fraying surfaces or spot welded joints. Use agitation with no less than 4 immersions followed by manual spray rinsing to remove entrapped solution.	10 min	Water	Room	Room
3	Strip old anodize if necessary.	As Req'd	C-116 Immersion Only Alternates:	71 – 82	160 – 180
			C-137 Immersion Only	82 – 100	180 – 212
			Blast with CP-1 glass bead or CP-2 aluminum oxide abrasive, 150 – 220 grit.		
4	Rinse.	As Req'd	Water	Rm – 82	Rm – 180
5	Dry.	As Req'd	Shop Air	Room	Room
6	Examine for completeness of strip.	As Req'd			

Table 20-2. Anodize Procedure

Step	Operation	Time	Solutions, Materials, and Current	Temp °C	Temp °F
1	Prepare part for anodize.	As Req'd			
2	Remove oil, grease, dirt, etc., if required. **NOTE** Use higher temperature and time for heavier soils.	1 – 15 min	C-202 Immersion Only Alternates:	52 – 66	125 – 150
			C-205 Immersion Only	57 – 80	140 – 180
3	Rinse.	30 – 60 sec	Water	Room	Room
4	(OPTIONAL STEP) Alkaline etch. **NOTE** Use higher temperature and time for heavier oxides.	10 – 90 sec	C-473 Immersion Only Alternates:	57 – 80	140 – 180
			Silica sand or aluminum oxide blast using mesh size per finish desired.		
5	Rinse.	30 – 60 sec	Water	Room	Room
6	Deoxidize/Remove smut. Use continuous agitation.	As Req'd	C-324 (All types except Type IC)	35 – 60	95 – 140
			C-327 (Type IC only)	Rm – 43	Rm – 110
7	Rinse. (All types except Type IC)	30 – 60 sec	Water	Room	Room
	Rinse. (Type IC only)	10 min	Water	Room	Room
8	Anodize. (See Paragraph 20.6.7 for voltages and current densities.) Chromic acid. (Type I)	As Req'd	C-441 **NOTE** Apply current in gradual increments over a 10 – 15 minute period until voltage reads 40.	33 – 37	91 – 99
	Anodize. (See Paragraph 20.6.7.) Boric acid/Sulfuric acid. (Type IC)	21 – 25 min	C-474 An initial setting of not more than five volts is increased by no more than five volts per minute until 15 ± 1 volts is reached.	24 – 29	76 – 84

Table 20-2. Anodize Procedure - Continued

Step	Operation	Time	Solutions, Materials, and Current	Temp °C	Temp °F
	Anodize. (See Paragraph 20.6.7.) Sulfuric acid. (Type II)	As Req'd	C-444 Current is applied slowly until desired current density is reached.	13 – 22	64 – 72
	Anodize. (See Paragraph 20.6.7.) Hard coating. (Type III)	As Req'd	C-445 Current is applied slowly until desired current density is reached. Alternates:	0 – 4	32 – 39
			C-464	0 – 4	32 – 39
	Phosphoric acid.		C-447 Place part in solution then apply current slowly and in steps up to 10 volts.	Room	Room
9	Rinse. (All types except Type IC)	As Req'd	Deionized water	Room	Room
	Rinse. (Type IC only) Use the 10 minute rinse procedure of Table 20-1, Step 2 when applicable.	3 – 15 min	Deionized water	Room	Room
10	Dye, if required.	As Req'd	Any pigmented solution meeting the requirements of MIL-A-8625.	As per vendors instructions	
11	Seal. (undyed parts) (All types except Type IC)	15 min	C-443 Immersion Only Alternates:	88 – 100	190 – 212
			C-442 Immersion Only	88 – 100	190 – 212
			C-475	88 – 93	190 – 200
			Deionized water	90 – 100	208 – 212
	Seal. (undyed parts) (Type IC only)	23 – 28 min	C-475	87.8 – 93.4	190 – 200
12	Seal. (dyed parts)	3 – 20 min	C-442 Immersion Only Alternates:	88 – 100	190 – 212
			C-443 Immersion Only	88 – 100	190 – 212
			Deionized water	98 – 100	208 – 212
14	Dry. (OPTIONAL STEP FOR ALL TYPES EXCEPT Type IC)	As Req'd	Shop Air	Room	Room
	Dry thoroughly. (Type IC only)	As Req'd		≤ 71	≤ 160

Table 20-3. Conversion Coating Procedure

Step	Operation	Time	Solutions, Materials, and Current	Temp °C	Temp °F
1	Prepare part for conversion coat.	As Req'd			
2	Remove oil, grease, dirt, etc., if required. **NOTE** Use higher temperature and time for heavier soils.	1 – 15 min	C-202 Immersion Only Alternates:	52 – 66	125 – 150
			C-205 Immersion Only	57 – 80	140 – 180
3	Rinse.	30 – 60 sec	Water	Room	Room
4	(OPTIONAL STEP) Alkaline etch. **NOTE** Use higher temperature and time for heavier oxides.	½ – 5 min	C-473 Immersion Only Alternates:		
			Silica sand or aluminum oxide blast using mesh size per finish desired.		
5	Rinse.	30 – 60 sec	Water	Room	Room
6	Deoxidize/Remove smut. Use continuous agitation.	As Req'd	C-324 Alternates:	35 – 50	95 – 140
			C-327		
7	Rinse.	30 – 60 sec	Water	Room	Room
8	Conversion coat.	As Req'd	C-446 Immersion Only	Room	Room
9	Rinse.	As Req'd	Deionized water	60 Max	140 Max
10	Dry.	As Req'd	Shop Air	Room	Room

CHAPTER 21
BLACK COATINGS

21.1 PURPOSE.

This chapter provides instructions for the application of a black coating to wrought iron, cast iron, carbon and low alloy steels, copper alloys, and stainless steel. Black oxide coatings on ferrous metals shall meet the requirements of Specification MIL-DTL-13924. Black surface coatings on copper alloys shall meet the requirements of Specification MIL-F-495 and Phosphate coatings shall meet the requirements of Specification MIL-DTL-16232.

21.2 BLACK OXIDE COATING – GENERAL.

a. Black oxide is an iron oxide coating created on the surface of ferrous metal items by immersion in a highly concentrated alkaline solution of chemical salts maintained at a high temperature. This coating affords very little corrosion protection, but with an application of a rust inhibiting compound, the corrosion resistance is much improved. Because this coating produces no appreciable build-up on parts being treated (less than 0.0001 inch) it is particularly suitable for precision machined moving parts.

b. The coating presents a pleasing black appearance frequently employed for decorative purposes; bases for oil, paint and wax; and a decrease in light reflection. The coating is resistant to physical abuse, has a good abrasion resistance, and will chip only with difficulty. The process will not cause hydrogen embrittlement.

21.3 COATING APPLICATION.

a. Unless otherwise specified, the coating shall be applied to wrought iron, cast iron, carbon, and low alloy steels.

b. The basis metal shall be free from visible defects that will be detrimental to the appearance or protective value of the coating or intended use of the item.

c. The coating shall be applied after all basis metal heat treatments and mechanical operations such as machining, brazing, welding, forming, and perforating of the article have been completed.

21.4 UNDERCOATINGS.

There shall be no other coating applied to the surface of the part on which the black oxide coating will be applied, except those used as a temporary protective mask, which will be removed immediately prior to the application of the coating.

21.5 COATING CRITERIA.

The coating shall be smooth, adherent, and uniform in appearance, presenting a pleasing black appearance. Indications of any reddish brown or green smut or non-uniform black color will be cause for rejection. The process shall not result in any attack of the surface, either pitting or intergranular. It shall not reduce the hardness of the parts being processed or expose the parts to temperatures in the temper brittle range of the material, nor shall it cause embrittlement of the steel.

21.6 EQUIPMENT.

21.6.1 Tank Construction. Black oxide tanks should be constructed of stainless steel or low carbon steel, double-walled with a minimum of 3 ½ inches of insulation in between the walls. The tank should be fitted with a water fill inlet with an automatic control device to control the liquid level of the tank. The drainage pipe and valve should also be constructed of black iron (steel). No tin, zinc, copper, lead, or other non-ferrous metal shall be used in tank construction.

21.6.2 Ventilation. The tank shall be equipped with a positive ventilation system capable of meeting or exceeding the ventilation requirements of AFOSHSTD 48-2.

21.6.3 Heating. Straight cylindrical or L-shaped electrical immersion heaters mounted on the tank side can be used to heat the solution but they should be removable from the top of the tank without requiring drainage of the black oxide solution.

21.6.4 Agitation. An electrical or air driven mechanical mixer is required to prevent heat stratification and possible explosion of the solution. Air agitation should be avoided as this increases the rate at which insoluble sodium carbonate sludge is formed, requiring more frequent tank cleaning.

21.7 BATH CHARACTERISTICS.

a. The bath is composed of a mixture of sodium hydroxide (63% minimum), sodium nitrate (33% minimum) and water. The temperature of the bath is usually regulated by either additions of water or chemicals. The chemicals are added in the mixture proportion which is 7 pounds sodium hydroxide and 5 pounds sodium nitrate. These additions are continued until the desired temperature is reached. Parts treated in a freshly prepared bath may come

out with a light powdery, reddish brown smut. Additions of 1 pound of sodium sulfide per 300 gallons of solution will generally correct this condition.

b. Two black oxide baths are recommended for producing the highest quality coating although one bath can be utilized. The first solution maintained at 140°C (285°F) produces the firmly bonded desired black color. The second bath operated at 152°C (305°F) corrects any lack of uniformity in the color or depth of the coating and provides further penetration. Normally the length of time required to produce the color in the first bath is also the time required for the second bath to provide the penetration depth required for a quality coating.

21.8 PHOSPHATE COATINGS – GENERAL.

a. Phosphate coatings are surface layer treatments in which the metal's surface has been transformed into a non-metallic, non-conductive state by metal phosphates dissolved in carefully balanced phosphoric acid solutions. The produced coatings are crystalline, non-reflective, and water insoluble. They are primarily used to precondition surfaces to receive and retain paint, to prevent under-paint corrosion, to provide a BREAK-IN surface for bearings, and to improve corrosion resistance. The coating is not itself sufficient protection, but its absorbent nature makes it an excellent base for impregnation with paint, lacquer, oil, wax, etc. to form a desirable protective coating.

b. There are two major types of phosphate coatings used throughout the Air Force. Type M (Manganese base phosphate) produces a coating with a thickness of 0.002 – 0.004 inch and is used on parts in which a moderate degree of corrosion resistance is required, to prevent wear, to assist in the BREAK-IN of bearing surfaces, and to protect parts that will go into long term storage. This type coating is not to be used on parts exposed to temperatures above 121°C (250°F).

c. Type Z (Zinc base phosphate) produces coating thicknesses of 0.002 – 0.006 inch and is used to prevent galling in cold-extrusion and deep drawing applications, to reduce sliding friction, to provide rust proofing, and to provide coating protection for parts in service. This type coating is not to be used on parts exposed to temperatures above 93°C (200°F).

21.9 COATING APPLICATION.

a. Unless otherwise specified, the coating shall be applied after all basis metal heat treatments and mechanical operations such as machining, brazing, welding, forming, and perforating of the article have been completed.

b. The basis metal shall be free from visible defects that will be detrimental to the appearance or protective value of the coating or intended use of the item.

c. Unless otherwise specified, parts (including carburized parts) having a hardness of Rockwell C 39 or above shall be stress relieved prior to coating and a hydrogen embrittlement relief after coating.

21.10 UNDERCOATING.

There shall be no coating applied to the surface of the part on which the phosphate coating will be applied, except those used as a temporary protective mask, which will be removed prior to the application of the coating.

21.11 COATING CRITERIA.

Phosphate coatings shall be evenly deposited and shall have a uniform crystalline texture with a pattern not visible to the unaided eye and shall not produce any evidence of etching or intergranular attack on the basis metal. Coatings shall be gray to black and shall not have a mottled appearance. They shall be free of white stains (due to dried phosphating solution), rust, and fingerprints. Brown or orange stains caused by chromic acid rinse and non-uniformity of color due to heat treatment, degree of cold work, or composition of the basis metal shall not be cause for rejection.

21.12 EQUIPMENT.

21.12.1 Tank Construction. Phosphate tanks should be constructed of Type 316, 304, or 302 stainless steel. The tanks should be double walled with a minimum of 3 ½ inches of insulation between the walls. The tank should be equipped with a water fill inlet with an automatic control device to control the liquid level of the solution.

21.12.2 Ventilation. The tank shall be equipped with a positive ventilation system capable of meeting or exceeding the ventilation requirements of AFOSHSTD 48-2.

21.12.3 Heating. The tank shall be equipped with immersion heaters constructed of Type 316, 304, or 302 stainless steel. The heaters should be removable from the top of the tank to facilitate cleaning of the tank.

21.13 BATH CHARACTERISTICS.

a. The phosphate baths are composed of water insoluble phosphates dissolved in phosphoric acid solutions with accelerators to speed up the action and reagents for the prevention of the polarization effects of hydrogen included. The solution being

acid reacts on the metal surface of the part. As the reaction continues, the acidity at the solution-part interface decreases resulting in reduced solubility of the phosphates, which causes crystallization of some of the phosphate on the metal surface. The characteristics of the crystallization is determined by the part's surface preparation prior to coating, the concentration of the solution, and the temperature of the bath. The solution composition is critical and therefore, must be frequently and carefully controlled. Too much free acid results only in pickling of the steel surface while too little promotes sludge build-up. Excessive iron is detrimental to corrosion resistance.

b. The baths operate at temperatures between 90°C (194°F) and 100°C (210°F). As the temperature increases, grain size is refined and corrosion protection improved.

Table 21-1. Stripping and Application of Black Oxide Coating for Ferrous Metal Parts

Step	Operation	Time	Solutions, Materials, and Current	Temp °C	Temp °F
1	Vapor degrease. **WARNING** Solvent vapors are toxic. Avoid inhalation of vapors or contact with skin or clothing.	As Req'd	ASTM D4081 and ASTM D4376 (Tetrachloroethylene) Alternates:	120 – 124	248 – 256
			ASTM D4080 (Trichloroethylene) **NOTE** Not to be used where prohibited by state regulations.	88 – 90	187 – 194
2	Strip old coating. (Usually 1 min)	As Req'd	C-302 Alternates:	16 – 24	60 – 75
			C-304	16 – 24	60 – 75
3	Rinse.	As Req'd	Water	Rm – 82	Rm – 180
4	Dry.	As Req'd	Shop Air	Room	Room
5	Clean area to be coated.	As Req'd	CP-1 Alternates:		
			CP-4 or Chemically by C-206	72 – 82	160 – 180
6	Rinse.	15 – 60 sec	Water	Room	Room

Table 21-1. Stripping and Application of Black Oxide Coating for Ferrous Metal Parts - Continued

Step	Operation	Time	Solutions, Materials, and Current	Temp °C	Temp °F
7	Immerse in black oxide solution #1. (Usually 15 – 30 min) **CAUTION** Do not plug holes in parts as trapped steam may cause violent splashing.	As Req'd	C-437 Alternates:	140 – 143	285 – 290
			C-438 **NOTE** If only one black oxide bath is used, double immersion time.	140 – 143	285 – 290
8	Rinse.	As Req'd	Water	Room	Room
9	Examine for presence of desired color. **NOTE** If desired color is not present, note if smut is on surface of part. If no smut, reimmerse C-437.	As Req'd			
10	Immerse in black oxide solution #2.	As Req'd	C-437 Alternates:	152 – 154	305 – 310
			C-438	152 – 154	305 – 310
11	Rinse.	15 – 16 sec	Water	60 – 88	140 – 190
12	Rinse.	15 – 16 sec	Water	Room	Room
13	Chemically rinse.	30 – 60 sec	C-439	66 – 88	150 – 190
14	Dry.	As Req'd	Shop Air	Room	Room
15	Inspect coating. **NOTE** An acceptable black oxide coating shall be smooth, adherent, uniform in appearance with no indications of reddish brown or green smut.	As Req'd			
16	Immerse in supplemental coating, if necessary.	15 – 60 sec	MIL-PRF-16173, Grade 3 Alternates:	Room	Room

Table 21-1. Stripping and Application of Black Oxide Coating for Ferrous Metal Parts - Continued

Step	Operation	Time	Solutions, Materials, and Current	Temp °C	Temp °F
			MIL-C-82594	Room	Room
			MIL-PRF-32033	Room	Room

Table 21-2. Application of Black Oxide Coating on Copper Alloys

Step	Operation	Time	Solutions, Materials, and Current	Temp °C	Temp °F
1	Vapor degrease. **WARNING** Solvent vapors are toxic. Avoid inhalation of vapors or contact with skin or clothing.	As Req'd	ASTM D4081 and ASTM D4376 (Tetrachloroethylene) Alternates:	120 – 124	248 – 256
			ASTM D4080 (Trichloroethylene) **NOTE** Not to be used where prohibited by state regulations.	88 – 90	187 – 194
2	Strip old coating. (Usually 1 min)	As Req'd	C-302 Immersion Only Alternates:	Room	Room
			C-423 Immersion Only	Room	Room
3	Rinse.	As Req'd	Water	Rm – 82	Rm – 180
4	Dry.	As Req'd	Shop Air	Room	Room
5	Prepare part for coating. **NOTE** Alloys containing less than 65% copper or parts which have been brazed with alloys containing less than 65% copper should be copper plated prior to coating.				
6	Alkaline clean.	1 – 3 min	C-208 Immersion Only Alternates:	82 – 96	180 – 205
			C-207 Immersion Only	82 – 93	180 – 200
7	Rinse.	15 – 30 sec	Water	Room	Room
8	Activate.	½ – 2 min	C-312 Immersion Only	Room	Room

Table 21-2. Application of Black Oxide Coating on Copper Alloys - Continued

Step	Operation	Time	Solutions, Materials, and Current	Temp °C	Temp °F
			Alternates:		
			C-306 Immersion Only	Room	Room
9	Rinse.	15 – 60 sec	Water	Room	Room
10	Oxide coat.	As Req'd (¼ – 3 min)	C-457 Immersion Only	60 – 66	140 – 150
11	Rinse.	As Req'd	Water	Room	Room
12	Rinse.	As Req'd	Water	49 – 82	120 – 180
13	Dry.	As Req'd	Shop Air	Room	Room
14	Examine coating. **NOTE** An acceptable coating shall be uniform in appearance, smooth adherent, continuous and free from flaking, nodules, blisters, and other defects detrimental to the intended purpose of the coating.	As Req'd			
15	Preserve if necessary.	As Req'd	MIL-PRF-16173, Grade 3 Alternates:	Room	Room
			MIL-C-82594	Room	Room
			MIL-PRF-32033	Room	Room

Table 21-3. Application of a Black Coating on Stainless Steel

Step	Operation	Time	Solutions, Materials, and Current	Temp °C	Temp °F
1	Vapor degrease. **WARNING** Solvent vapors are toxic. Avoid inhalation of vapors or contact with skin or clothing.	As Req'd	ASTM D4081 and ASTM D4376 (Tetrachloroethylene) Alternates:	120 – 124	248 – 256
			ASTM D4080 (Trichloroethylene) **NOTE** Not to be used where prohibited by state regulations.	88 – 90	187 – 194
2	Clean part for coating.	As Req'd	CP-1 Alternates:		
			CP-2		
3	Remove blasting media.	As Req'd	Shop Air **WARNING** Compressed air when used for cleaning is restricted to less than 30 psi. Use personal protective equipment to provide protection from flying particles.	Room	Room
4	Coat. (Usually 20 – 30 min)	As Req'd	C-458 **WARNING** Molten sodium dichromate can cause severe burns. To prevent splattering, parts must be completely dry. Operator will wear protective equipment when using this bath. Alternates:	482 Max	900 Max
			1. Place sodium dichromate in container. 2. Place parts on sodium dichromate. 3. Heat sodium dichromate to molten stage.	482 Max	900 Max

Table 21-3. Application of a Black Coating on Stainless Steel - Continued

Step	Operation	Time	Solutions, Materials, and Current	Temp °C	Temp °F
			4. Maintain temperature for 20 – 30 minutes.		
5	Remove part from solution and allow to cool 8 – 10 minutes.				
6	Rinse.	As Req'd	Water	82 – 100	180 – 212
7	Chemically rinse.	30 – 60 sec	C-439 Alternates:	65 – 88	150 – 190
			4 oz chromic acid and 4 oz phosphoric acid per 100 gallons of solution		
8	Rinse.	30 – 60 sec	Water	Rm – 82	Rm – 180
9	Dry.	As Req'd	Shop Air	Room	Room
10	Examine coating. **NOTE** An acceptable coating shall be smooth, continuous, adherent, uniform in appearance, and free from other harmful defects detrimental to the intended purpose of the coating.	As Req'd			

Table 21-4. Application of Phosphate Coating on Ferrous Parts

Step	Operation	Time	Solutions, Materials, and Current	Temp °C	Temp °F
1	Stress relief Rockwell C 39 or greater. Unless otherwise specified, parts having the minimum hardness value of Rockwell C 39 and which are ground, cold-formed, or cold-straightened, shall be given a stress relief treatment for minimum of 1 hour for every inch of thickness but not less than ½ hour before cleaning and coating.	60 min for every inch of thickness		177 – 204	350 – 400
2	Vapor degrease. **WARNING** Solvent vapors are toxic. Avoid inhalation of vapors or contact with skin or clothing.	As Req'd	ASTM D4081 and ASTM D4376 (Tetrachloroethylene) Alternates:	120 – 124	248 – 256
			ASTM D4080 (Trichloroethylene) **NOTE** Not to be used where prohibited by state regulations.	88 – 90	187 – 194
3	Clean surface of part.	As Req'd	CP-1 Alternates:		
			CP-2		
4	Manganese phosphate. Zinc phosphate.	30 – 45 min 30 min	C-459 or C460	90 – 100 90 – 100	194 – 210 194 – 210
5	Rinse.	1 – 2 min	Water	Room	Room
6	Acidified rinse.	1 – 2 min	C-439	66 – 93	150 – 200
7	Dry.	As Req'd	Shop Air	Room	Room
8	Examine coating. **NOTE** An acceptable coating shall be smooth, adherent, uniform in appearance, and have a crystalline texture with a pattern not visible to the unaided eye. The coating shall be gray to black in color.	As Req'd			

Table 21-4. Application of Phosphate Coating on Ferrous Parts - Continued

Step	Operation	Time	Solutions, Materials, and Current	Temp °C	Temp °F
9	Stress relief parts with a hardness of Rockwell C 39 or above.	8 hrs or 120 hrs		99 – 108 Room	210 – 225 Room
10	Supplemental treat as applicable.	As Req'd	MIL-PRF-16173, Grade 3 Alternates:	Room	Room
			MIL-L-3150	Room	Room
			MIL-C-82594	Room	Room
			MIL-PRF-32033	Room	Room
11	Testing.	As required by Test Method 48			

CHAPTER 22
CHEMICAL MILLING

22.1 PURPOSE.

This chapter provides instructions for the chemical milling of aluminum, ferrous, and titanium alloys.

22.2 GENERAL.

a. Chemical milling is an immersion process used to chemically etch or remove metal from the surface of either shaped or unshaped items. This process is effective for milling wrought or cast alloys. Metal may be removed from the entire surface of the part or from only selected areas when a maskant is employed to protect areas which do not require milling.

b. Chemical milling offers certain advantages over conventional mechanical metal removal methods. Parts can be milled on both sides simultaneously. Many parts can be milled at one time depending on the capacity of the processing tanks. Extrusions, forgings, castings, formed sections and deep drawn apart may be lightened considerably. Parts may also be produced with very thin web sections without excessive warping or distortion. Sheets, extrusions, and formed sections can be readily tapered on one or both sides. Lighter weight integrally stiffened parts can be produced which are simplified by the elimination of riveting or welding. The process also permits the fabrication of light weight, high strength parts which were heretofore either prohibitively expensive or impossible to manufacture using even the most sophisticated machine tools.

c. The chemical milling process also has some limitations. Aluminum castings are difficult to mill due to the porosity and inhomogeneity of the cast materials. Chemical milling of castings should be accomplished only on parts where neither a smooth surface nor a high strength is desired. Welded parts must be considered individually because welded areas often pit and etch unevenly. Individual tests should be performed to determine the advisability of chemical milling a particular part as some metals do not dissolve uniformly thus producing rough uneven, undesirable surfaces. The cross section of the finished part may show taper, selected reduction in certain dimension, uniform reduction in all dimensions, or a combination of these configurations.

22.3 CHEMICAL MILLING APPLICATION.

a. Unless otherwise specified, part submitted for chemical milling shall be free from surface irregularities and defects such as thickness variation, waviness, dents, and scratches as they will be reproduced in the chemical milled surface.

b. The etchant solution used for chemical milling may be either a proprietary compound or one formulated from basic chemicals. It shall react uniformly over the surfaces of the part being milled and shall produce a surface roughness no greater than 200 microinches. The etchant shall not detrimentally effect the chemical or mechanical properties of parts which are chemical milled.

22.4 CHEMICAL MILLED SURFACE.

a. Unless otherwise specified, the chemical milled surface shall be uniformly etched without roughness, sharp edges, ridging, pitting, distortion, and other such defects. Defects appearing on the trim area which will be subsequently removed shall not be cause for rejection. The finished part shall be clean and free of residues.

b. Unless otherwise specified, the surface roughness or finish of fatigue critical parts shall not exceed 125 microinches. The surface roughness of all other parts shall not exceed 200 microinches.

22.5 EQUIPMENT.

22.5.1 Tank Construction.

a. Etchant tanks for alkali solution may be constructed of carbon steel.

b. Etchant tanks for acid solutions, deoxidizing and desmutting tanks shall be constructed of stainless steel or carbon steel lined with polyvinylchloride, koroseal, or other suitable material.

c. Rinse tanks may be constructed of steel and should be lined with polyvinylchloride or koroseal. The tank should be designed for continuous overflow to maintain a clean water surface. It should also be equipped with a spray system whereby the parts may be rinsed as they are being withdrawn from the rinse tank.

22.5.2 Ventilation. All tanks in the chemical milling process line shall be equipped with a positive ventilation system capable of meeting or exceeding the ventilation requirements of AFOSHSTD 48-2.

22.5.3 Agitation. All tanks in the process line require agitation. Agitation is necessary to aid in heat transfer as well as to maintain a uniform concentration of constituents throughout the etch bath, especially at the interface between part and solutions. Agitation may be provided by air or mechanical methods.

22.6 SUPPLIES.

22.6.1 Work Bench. A large work area should be provided upon which the parts can be placed during scribing and removing of maskant from areas to be chemical milled.

22.6.2 Maskant. The maskant must be a material which will withstand the temperature at which the etch bath is operated without dissolving or losing it's adhesion to the surface of the coated part. The maskant shall fully protect masked areas from attack by the etch bath. The maskant shall also be capable of easy removal by either peeling or dissolving.

22.6.3 Cutting Instrument. An instrument such as an X-Acto knife is necessary for the proper cutting and removal of the maskant.

22.7 BATH CHARACTERISTICS AND OPERATION.

a. The etch solution is the heart of the chemical milling process. It may be either a proprietary compound or formulated from basic chemicals. The etch bath shall be capable of analytical control which can be performed routinely, timely, and with standard laboratory equipment and reagents. It shall also be responsive to changes in the operating variables in order to provide the best results for a particular alloy. The etch bath shall operate at a temperature less than 100°C (212°F).

b. The etch bath for aluminum is basically sodium hydroxide containing some sulfur and perhaps gluoconic acid. Small amounts of aluminum are generally dissolved in new solutions to retard some of the action of the alkali on the basis metal, thus a more uniform milled surface is produced. The bath is usually operated between 88 – 94°C (190 – 200°F).

c. The etch bath for ferrous base alloys is formulated from a mixture of strong mineral acids (hydrochloric, nitric, and phosphoric). This solution is effective for milling a variety of steels as well as nickel base alloys. This bath is operated at a temperature of 54 – 71°C (130 – 160°F).

d. The etch bath for titanium alloys is also formulated from a mixture of strong acids (hydrofluoric and nitric). It is operated at ambient temperature.

e. Parts should be rigidly supported during chemical milling to prevent floating and swaying in the etch solution. Parts should also be positioned so that there is a minimum restriction of hydrogen gas which is evolved during the milling process. Avoid pockets in which air or gas may accumulate. Position parts far enough apart to prevent the hydrogen stream from one part impinging on another. A minimum distance of 6 inches between parts is recommended. Non-uniform chemical milling, rough surface finish, a tenacious smut deposit, and undesirable tapering of parts may all be indications of incorrect positioning of parts in the tank.

f. Metal is chemically removed from exposed (unmasked) areas by immersing the part in the etch solution without current. The amount of metal removed is controlled by the time of immersion in the bath.

g. Some factors that play an important role in the success of the chemical milling operation are (1) cleaning of parts prior to masking, (2) type of maskant used, (3) scribing techniques, (4) maskant removal prior to milling, and (5) smut removal during cleaning operations.

22.8 ETCH FACTORS – ALUMINUM ALLOYS.

See Table 22-2.

22.9 CONTROL AREAS.

Table 22-3 indicates optimum concentrations of free acid and nitrate ions for various alloys. The phosphate ion concentration is 1.5 to 4.5N; the chrome ion is 6 grams per liter minimum; the total metal ion is 100 – 200 grams per liter; and the iron content is 90 grams per liter minimum.

22.10 REJUVENATION.

a. Maintain the correct normality by adding free acid in the form of hydrochloric and nitric acid and nitrate in the form of nitric acid or ferric nitrate.

b. Sludge, excess metal ion, is removed from the settling tank.

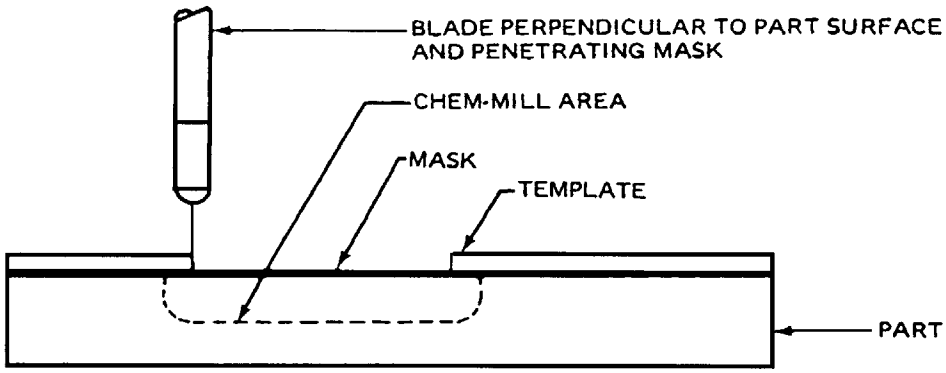

Figure 22-1. Correct Method of Scribing

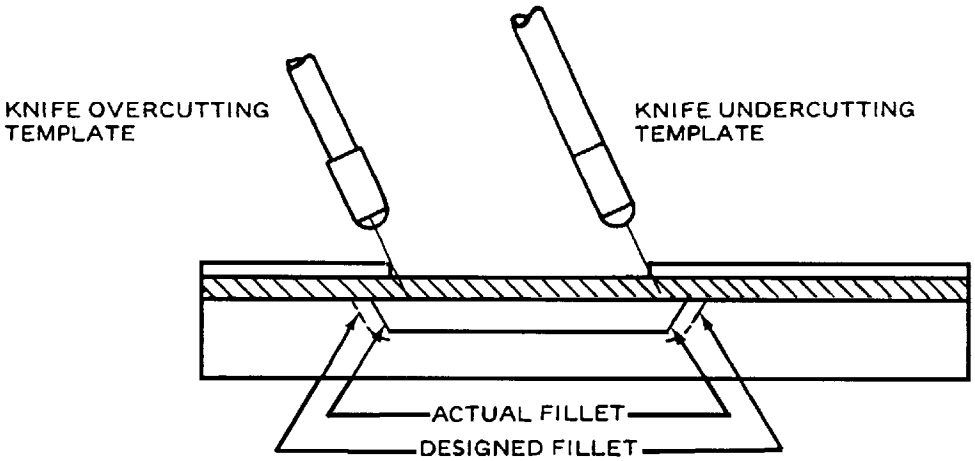

Figure 22-2. Incorrect Methods of Scribing

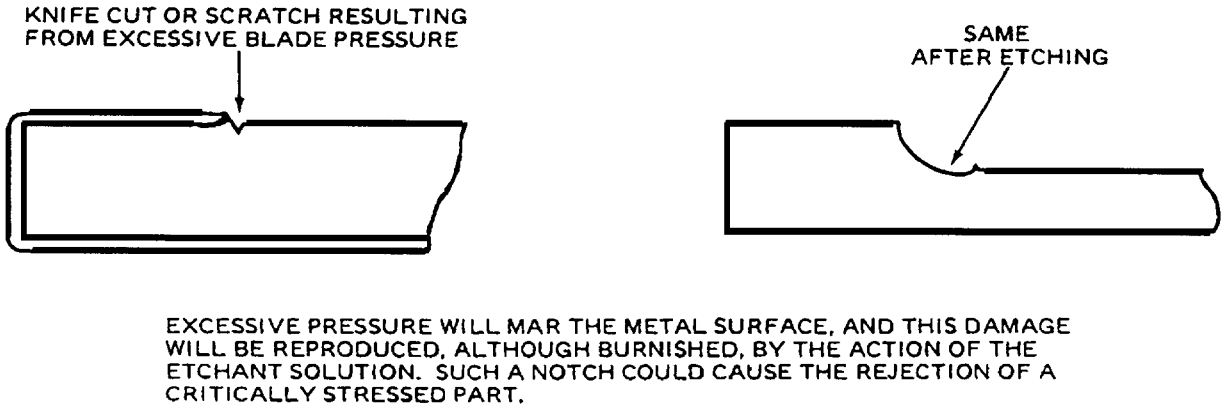

Figure 22-3. Excessive Blade Pressure Damage

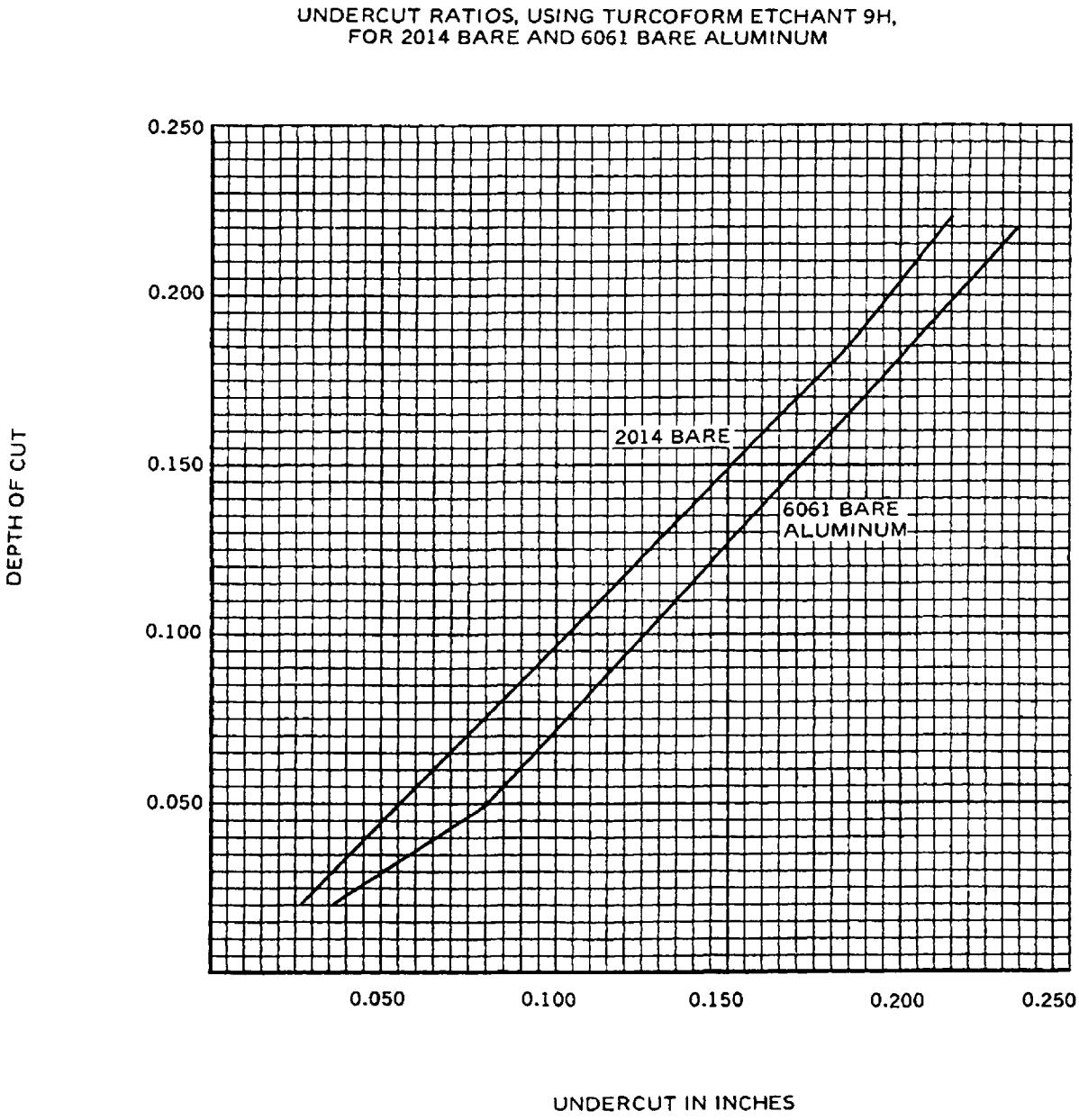

Figure 22-4. Undercut Ratios, Using Turcoform Etchant 9H, for 2014 Bare and 6061 Bare Aluminum

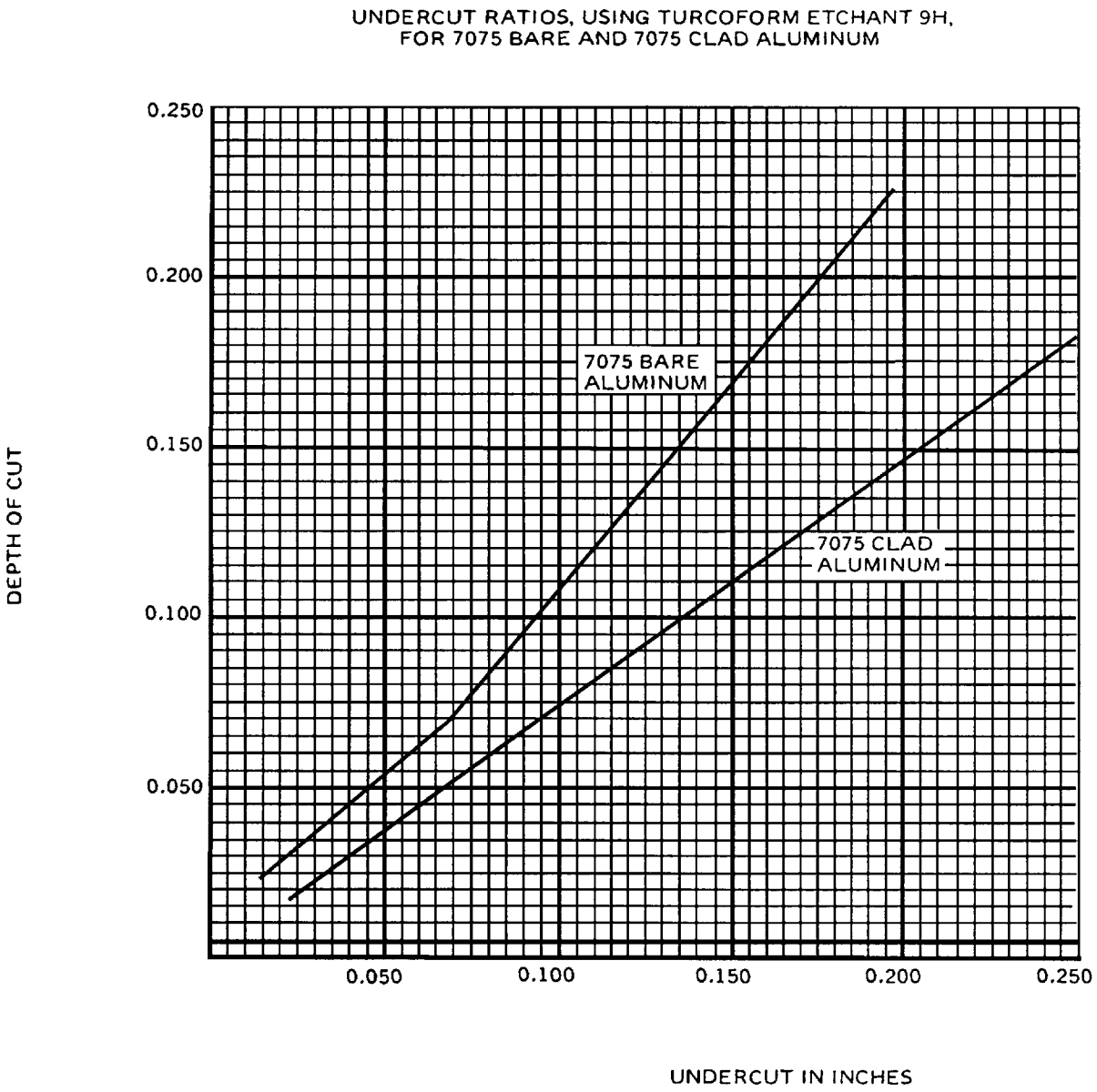

Figure 22-5. Undercut Ratios, Using Turcoform Etchant 9H, for 7075 Bare and 7075 Clad Aluminum

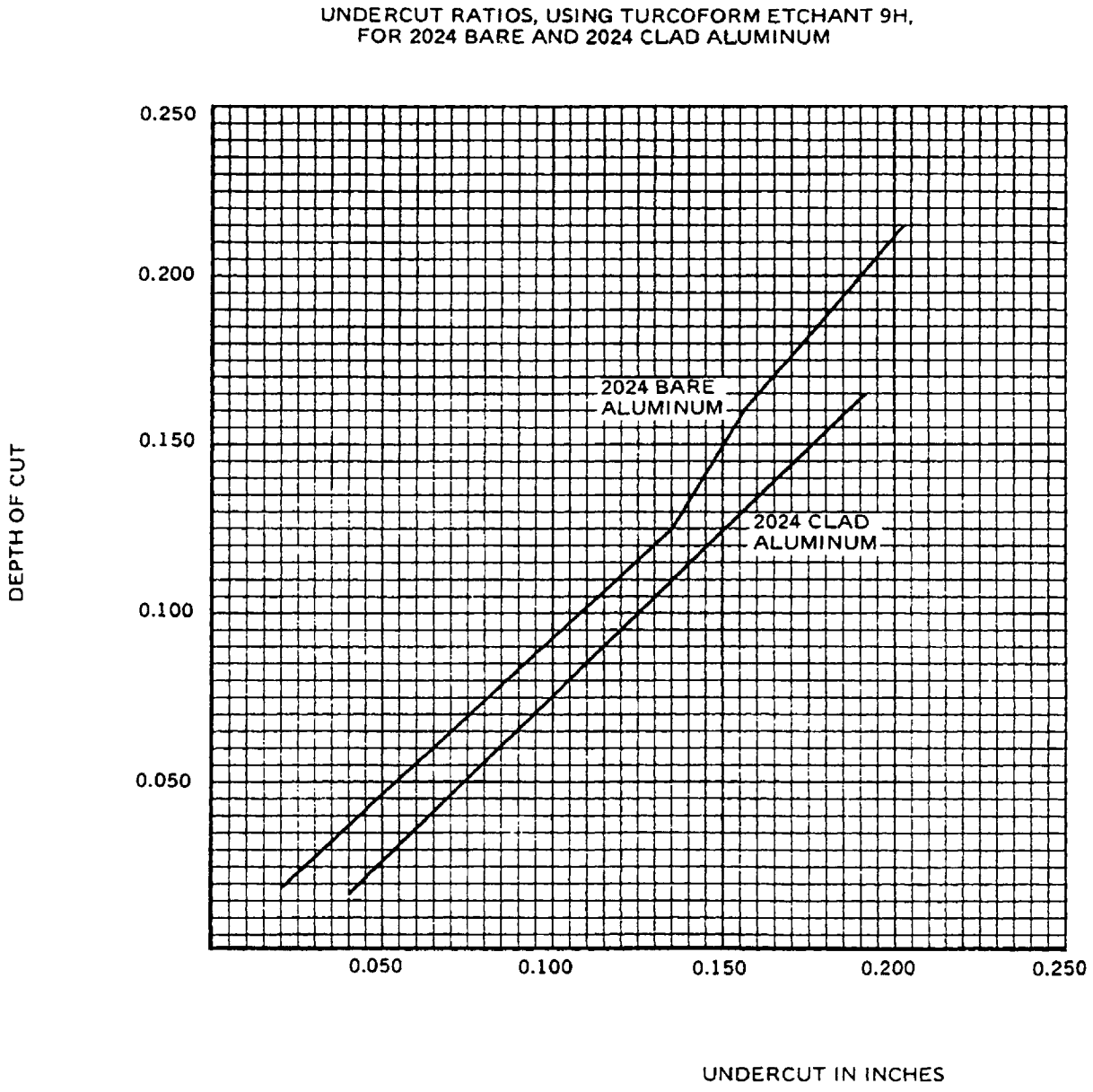

Figure 22-6. Undercut Ratios, Using Turcoform Etchant 9H, for 2024 Bare and 2024 Clad Aluminum

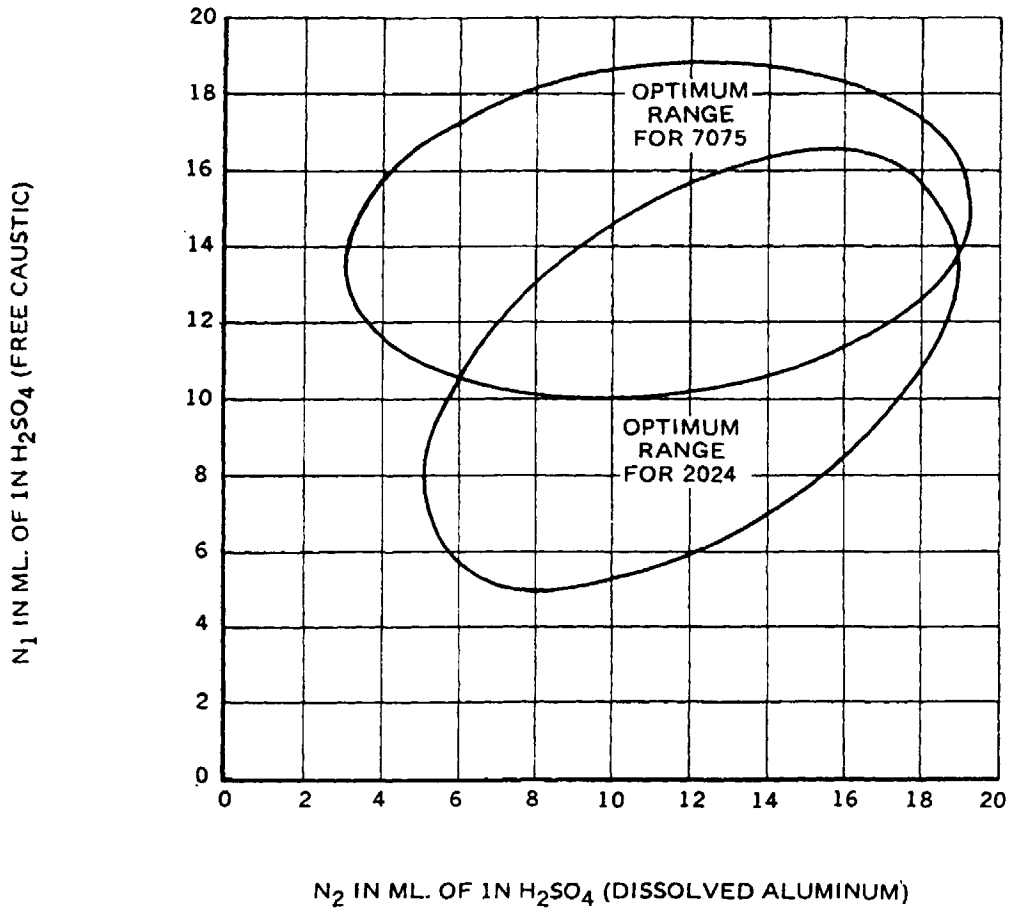

RECOMMENDED OPERATING RANGES FOR TURCOFORM ETCHANT 9H

NOTES: (1) A FRESH BATH WILL HAVE A N_1 = 12.0 AND N_2 - 4.0. TO INCREASE N_1 BY 1 ML., ADD APPROXIMATELY 0.08 LBS OF TURCOFORM ETCHANT 9H PER GALLON OF ETCHANT SOLUTION. TO INCREASE N_2 BY 1 ML., ADD APPROXIMATELY 0.15 LBS OF TURCOFORM ALKETCH INHIBITOR PER GALLON OF ETCHANT SOLUTION.

(2) A PORTION (50 - 75%) OF THE ETCHANT SOLUTION SHOULD BE DISCARDED WHEN THE N_2 VALUE REACHES 17.5 TO 20.0 (0.7 - 0.8 POUNDS PER GALLON OF DISSOLVED ALUMINUM).

Figure 22-7. Recommended Operating Ranges for Turcoform Etchant 9H

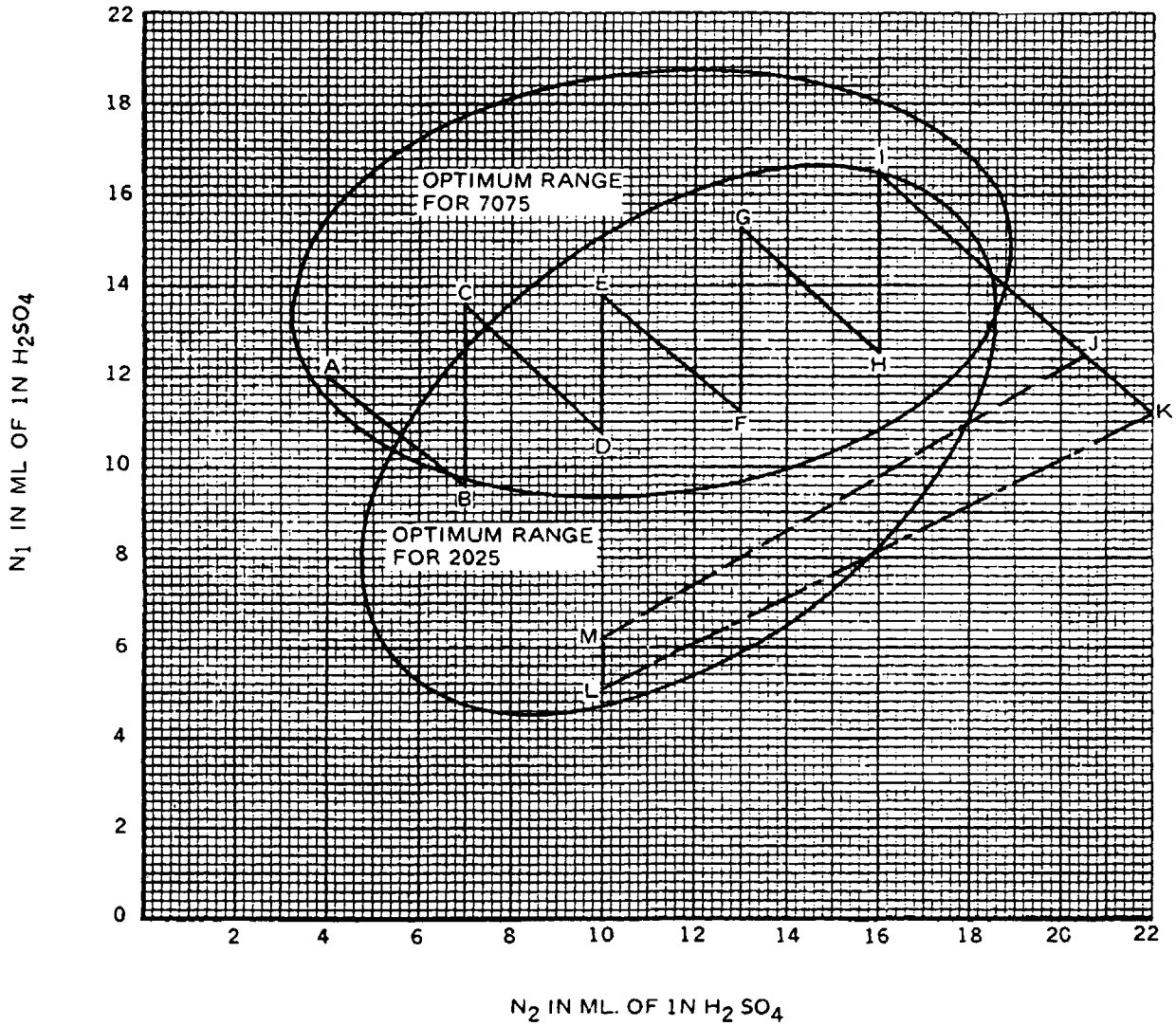

IN GENERAL, AS N_1 INCREASES:

(A)	THE SPECIFIC GRAVITY OF THE BATH	INCREASES
(B)	THE VISCOSITY OF THE BATH	INCREASES
(C)	THE ETCH RATE	INCREASES
(D)	THE ETCH FACTOR	INCREASES SLIGHTLY
(E)	THE SURFACE SMOOTHNESS	IMPROVES
(F)	THE END-GRAIN PITTING	IS NOT AFFECTED

AND AS N_2 INCREASES:

(A)	THE SPECIFIC GRAVITY OF THE BATH	INCREASES

Figure 22-8. Optimum Solution Range

Table 22-1. Trouble Shooting for Chemical Milling

Alloy: 6Al-4V

	Fast Etch Rate	Dish-ing	Slow Rate Passive	Un-even Etch	Rough Sur-face	Chan-nel	Ridging	Pitting Stria-tions or taper	Other
High Metal Content Causes						X	X		
High Nitric Acid (Low HF)			X X		X X	X X		X X	
High HF (Low Nitric)	X X	X X		X X					
Temperature High	X	X		X					fuming nit-rous oxides
Temperature Low			X	X	X				
Surface Tension High (Low W.A.)								STR	chamfer, or line chatter

Alloys: 6-6-2, 5-2-1/2, IMI-230 (3% Copper)

	Fast Etch Rate	Dish-ing	Slow Etch Rate	Un-even Etch	Rough Sur-face	Chan-nel	Ridging	Smut	Pitting Stria. or taper	Other
High Metal Content Causes			X			X	X			
High Nitric Acid (Low HF)			X X			X	X		X	
High HF (Low Nitric)			passive passive	X X				X X		total pas-sivation
Temperature High	X	X		X					X	fuming ni-trous oxide
Temperature Low			X	X				X		passive
Surface Tension High (Low W.A.)									STR	chamfer, or line chatter

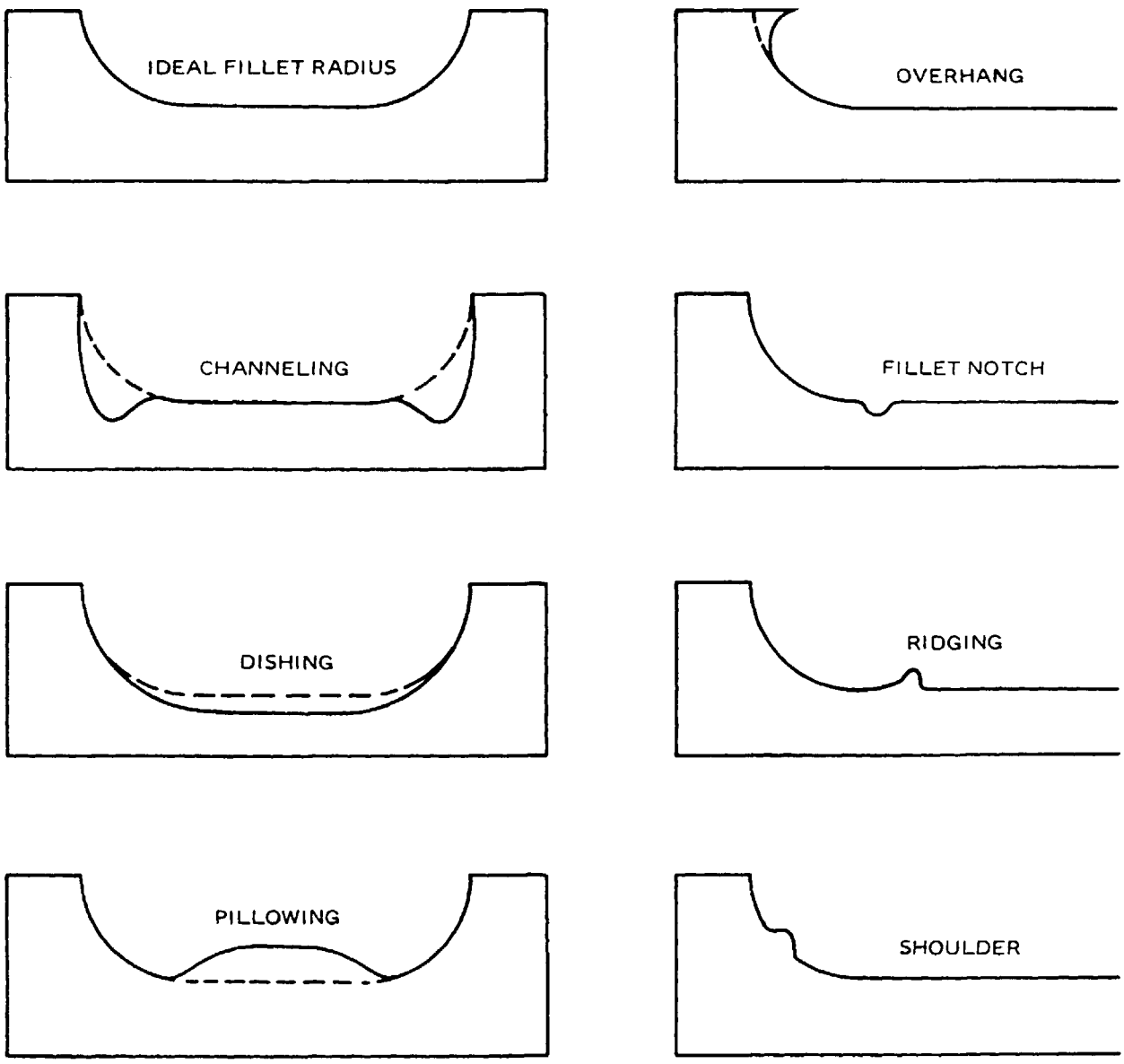

Figure 22-9. Chemical Milling Characteristics

Table 22-2. Table of Etch Factors

Alloy	Heat-Treat	Other	Depth of Cut Inches	Etch Factor Parallel to Grain	Etch Factor Perpendicular to Grain
2024	T6	Bare	0.001	0.98	0.98
			0.200	0.96	0.95
			0.300	10.91	0.91
2024	T6	Alclad	0.100	1.32	1.17
			0.150	1.17	1.01
7075	T6	Bare	0.100	1.06	0.99
			0.200	1.02	1.00
			0.300	0.96	0.94
7075	T6	Alclad	0.100	1.29	1.21
			0.150	1.33	1.26
7178	T6	Bare	0.100	0.90	0.90
			0.200	0.84	0.82
			0.300	0.80	0.78
7178	T6	Alclad	0.100	1.32	1.20
			0.150	1.38	1.28

*The above etch factors were determined with Turcoform Etchant 9H (N_1 9.2 – 8.8 and N_2 7.4 – 7.5) and Turcoform Mask No. 505. Because of the large numbers of variables which determine etch factors, the above etch factors should be used as a guide only.

Table 22-3. Control Chart

Alloy	Free Acid Normality	Nitrate Ion Normality
17-7 PH annealed	1.5 – 3.8	2.5 – 3.8
17-7 PH THD	1.5 – 2.0	2.0 – 3.5
17-7 PH T	1.5 – 2.5	2.5 – 3.5
17-7 PH (180 – 200 KSI)	3.0 – 5.0	2.0 – 4.0
304	1.2 – 3.0	3.5 – 4.0
321	1.5 – 2.5	3.0 – 3.8
Inconel X	5.0 – 6.0	2.5 – 4.0
PH 15-7 Mo annealed	3.0 – 5.0	2.0 – 3.5
PH 15-7 Mo RH 950	2.8 – 3.9	2.2 – 3.0
AM 350	3.0 – 4.5	2.0 – 3.5
AM 355	3.0 – 4.5	2.0 – 3.5
VASCOJET 1000 annealed	2.7 – 4.2	2.2 – 3.8
VASCOJET 1000 (280 – 300 KSI)	3.0 – 5.0	2.0 – 4.0
Crucible 56	2.7 – 4.5	2.2 – 4.0
4130	2.0 – 4.0	2.5 – 3.5
4340	3.0 – 5.0	2.5 – 3.5
Rene' 41**	6.0 – 8.0	1.0 – 2.0

*For use with both Turcoform Etchants 105 and 106.

**For best results, delete the phosphate and use 5.0 – 6.0N free acid and 2.0 – 3.0N nitrate ion.

Table 22-4. Chem-Milling Aluminum Base Alloys

Step	Operation	Time	Solutions, Materials, and Current	Temp °C	Temp °F
1	Vapor degrease or solvent wipe. **NOTE** Cleaning in a solution conforming to C-202 may be substituted.	As Req'd	ASTM D4081 and ASTM D4376 (Tetrachloroethylene)	120 – 124	248 – 256
2	Alkaline clean.	As Req'd	C-202 Immersion Only Alternates:	52 – 57	125 – 135
		5 – 30 sec	C-317 Immersion Only	88 – 94	190 – 200
3	Rinse.	10 – 60 sec	Water	Room	Room
4	Deoxidize.	3 – 8 min	C-319 Immersion Only Alternates:	Room	Room

Table 22-4. Chem-Milling Aluminum Base Alloys - Continued

Step	Operation	Time	Solutions, Materials, and Current	Temp °C	Temp °F
			Comparable commercial non-chromate deoxidizer for aluminum alloys		
5	Rinse.	10 – 60 sec	Water	Room	Room
6	Dry in air or shop air.	As Req'd	Room or Shop Air	Room	Room
7	Determine thickness of stock material of part.	As Req'd	Micrometer Alternates:	Room	Room
			Comparable thickness measuring instrument		
8	Mask for scribing and dry as required.	As Req'd	Turcoform maskant 531 or comparable neoprene or synthetic elastomer	Room	Room
9	Place scribe template over part and secure. Scribe the pattern outlined on the template using an X-Acto knife in order to expose the metal to be etched. Scribe using minimum pressure sufficient enough to just cut through the maskant. Avoid cutting the base metal during scribing to prevent ridging at base of the undercut fillet during chemical etching.	As Req'd	Clean table or work bench for scribing and removing maskant and X-Acto knife and blades		
10	Peel maskant to expose the area to be etched by carefully lifting the maskant at one end with a blunt instrument and then peeling the maskant away from area to be exposed. During the peeling step observe parting edges to determine if maskant has been cut through. If necessary, scribe to cut through the maskant in order to prevent lifting at the edges.	As Req'd			
11	Inspect maskant and repair any edges where maskant lifted during peeling. Also, repair pinholes, blisters, scratches, etc., which are detected in the cured maskant.	As Req'd	Turcoform touch-up coating #5 or #7, or comparable elastomer material for touch-up repairs Alternates:		

Table 22-4. Chem-Milling Aluminum Base Alloys - Continued

Step	Operation	Time	Solutions, Materials, and Current	Temp °C	Temp °F
			Vinyl electroplaters tape when depth of cut is less than 0.100 inch and lead foil electroplaters tape for deeper cuts or when special areas are difficult to patch. When lead tape is used it should be coated with maskant patching or silicone sealant.		
12	Cut out and remove areas of maskant which exhibit poor adhesion to the part. Solvent clean the exposed area and apply 2 to 4 brush coats of the maskant material. Cut out area should extend at least ¼ inch into areas of good adhesion. When defects are patched, the patch should be large enough to extend at least ¼ inch beyond the periphery of the damaged area.	As Req'd	ASTM D4081 and ASTM D4376 (Tetrachloroethylene) or other suitable solvent Turcoform maskant 531 or comparable		
13	Dry the patch coating prior to etching. Do not handle or touch dried exposed area with bare hands. Use cotton gloves if necessary to handle part.	2 hrs MIN		Room	Room
14	Scribe patched area to obtain original template pattern and remove the maskant. When patched areas are to be subjected to etchant in excess of 1 hour, apply a strip of lead foil or vinyl tape as applicable. Refer to Step 11.	As Req'd			
15	Rack parts in such a manner as to minimize or eliminate gas entrapment on surfaces being etched.	As Req'd			
16	Determine etch rate of alloy to be milled by preparing a monitor strip of the specified or applicable alloy (non-clad) approximately 3/8 inches and of sufficient thickness so that at least 0.050 inch of web is remaining after the etch period. Immerse strip vertically in the chem-milling etch solution for 30 minutes. The loss in thickness divided by 60 will give the etch rate.	As Req'd	Alternates:		

Table 22-4. Chem-Milling Aluminum Base Alloys - Continued

Step	Operation	Time	Solutions, Materials, and Current	Temp °C	Temp °F
	The part may be used for determining etch rate by etching the part for the time required to obtain ½ of the calculated etch depth. Adjust the remaining etch time accordingly in order to obtain the required etch depth.				
17	Determine etch time by determining etch rate and depth of metal to be removed. Depth in inches of metal to be removed divided by etch rate in inches/minutes equals etch time.	As Req'd			
18	Immerse parts in chem-mill etch bath.	80 – 90% of calculated etch time	C-317 Alternates:		
			C-321	88 – 94	190 – 200
19	Remove part from etch solution and rinse thoroughly. If a hose is used, avoid excessive pressure which may lift the maskant from the metal surfaces at cut edges. Examine thoroughly.	As Req'd			
20	Remove smut. (OPTIONAL)	1 – 5 min	C-319 Immersion Only Alternates:	Room	Room
			Comparable commercial non-chromate deoxidizer for aluminum alloys		
21	Determine how much metal has been removed and cut or remove maskant and reimmerse if applicable until the desired amount of metal has been removed.	As Req'd			

Table 22-4. Chem-Milling Aluminum Base Alloys - Continued

Step	Operation	Time	Solutions, Materials, and Current	Temp °C	Temp °F
	NOTE Continue chem-milling only if examination in Step 21 revealed no discrepancies in the milled surfaces. Otherwise discrepancies will be corrected prior to proceeding to etch.				
22	Remove from the etch bath and rinse.	As Req'd	Water	Room	Room
23	Desmut after the final etch cycle or when parts are to be out of the milling solution for more than 15 minutes.	3 – 10 min	C-319	Room	Room
24	Rinse thoroughly. **NOTE** If desmut solution is not entirely neutralized, part may corrode.	As Req'd	Water	Rm – 82	Rm – 180
25	Dry.	As Req'd	Shop Air	Room	Room
26	Remove maskant and racking.	As Req'd			
27	Examine the chem-milled part. The RMS finish shall be as specified on the applicable drawings. If the finish is not specified in the drawings, the surface roughness shall be as specified in Specification MIL-C-81769.	As Req'd			

Table 22-5. Chem-Milling Ferrous Base Alloys

Step	Operation	Time	Solutions, Materials, and Current	Temp °C	Temp °F
1	Vapor degrease. **WARNING** Solvent vapors are toxic. Avoid inhalation of vapors or contact with skin or clothing. **NOTE** Cleaning in a solution conforming to C-202 may be substituted.	As Req'd	ASTM D4081 and ASTM D4376 (Tetrachloroethylene) Alternates:	120 – 124	248 – 256
			ASTM D4080 (Trichloroethylene) **NOTE** Not to be used where prohibited by state regulations.	88 – 90	187 – 194
2	Clean area to be chem-milled.	As Req'd	CP-1 Alternates:		
			CP-2		
3	Remove excess cleaning media.	As Req'd	Shop Air	Room	Room
4	Alkaline clean.	5 – 10 min	C-201	52 – 57	125 – 135
5	Rinse.	30 – 60 sec	Water	Room	Room
6	Dry in air circulated oven only those parts required to be masked. **NOTE** Subsequent to cleaning all parts should be handled with cotton gloves.	As Req'd		60 – 94	140 – 200
7	Rack and mask for scribing.	As Req'd	Turcoform maskant 506 or comparable natural or synthetic elastomer		
8	Air cure.	24 hrs		Room	Room

Table 22-5. Chem-Milling Ferrous Base Alloys - Continued

Step	Operation	Time	Solutions, Materials, and Current	Temp °C	Temp °F
9	Place scribe template over part and secure by bolting or clamping. Scribe using minimum pressure sufficient enough to just cut through the maskant. **NOTE** Avoid cutting the base metal during scribing in order to prevent ridging at the base of the undercoat fillet during milling.	As Req'd	Clean table or work bench, scribing and removing maskant, and X-Acto knife and blades		
10	Remove maskant to expose the area to be etched by carefully lifting the maskant at one end with a blunt instrument and then peeling.	As Req'd			
11	Pre-etch pickle. **NOTE** Do NOT rinse after pickling.	1 – 3 min	C-303	Room	Room
12	Determine etch rate of alloy to be milled by preparing a monitor strip of the applicable alloy approximately 3x8 inches and of sufficient thickness so that at least 0.050 inch of web is remaining after the etch period. Immerse the strip vertically in the chem-milling etch solution for 30 minutes. The loss in thickness divided by 60 will give the etch rate.				
13	Determine etch time by determining etch rate and depth of metal to be removed. Depth in inches of metal to be removed divided by etch rate in inches/min equals etch time.				
14	Immerse in chem-mill etch bath.	80 – 90% of calculated etch time	C-318	55 – 71	130 – 160

Table 22-5. Chem-Milling Ferrous Base Alloys - Continued

Step	Operation	Time	Solutions, Materials, and Current	Temp °C	Temp °F
15	Remove part from etch solution and rinse throughly. If a hose is used, avoid excessive pressure which may lift the maskant from the metal surfaces at cut edges. Examine the etched surface thoroughly.	As Req'd			
16	Determine how much metal has been removed. Reimmerse or remove mask for next step-cut and reimmerse as applicable until the desired amount of metal has been removed. **NOTE** Continue chem-milling only if examination in Step 14 revealed no discrepancies in the milled surfaces. Otherwise, correct discrepancies prior to proceeding to etch.	As Req'd			
17	Remove from the etch bath and rinse in pre-etch pickle.	2 – 3 sec	C-303	Room	Room
18	Rinse.	10 – 20 sec	Water	Room	Room
19	Dry.	As Req'd	Shop Air	Room	Room
20	Demask.	As Req'd	Turcoform demask No. 622A Alternates:		
			Hot Water		
21	Rinse.	As Req'd	Water	Rm – 82	Rm – 180
22	Dry.	As Req'd	Shop Air	Room	Room
23	Bake as required. Less than RC 40 (180,000 psi). RC 40 – RC 43 (200,000 psi). RC 43 – RC 49 (240,000 psi). Over RC 49 (240,000 psi).	MIN Times — 3 hrs 8 hrs 23 hrs		191 ± 14	375 ± 25

Table 22-5. Chem-Milling Ferrous Base Alloys - Continued

Step	Operation	Time	Solutions, Materials, and Current	Temp °C	Temp °F
	NOTE Embrittlement relief should be done within 4 hours after chem-milling.				
24	Preserve with corrosion preventive compound if necessary.	As Req'd	MIL-C-16713, Grade 3 Alternates:	Room	Room
			MIL-C-82594		
			MIL-PRF-32033		

Table 22-6. Chem-Milling Titanium Alloys

Step	Operation	Time	Solutions, Materials, and Current	Temp °C	Temp °F
1	Remove grease by solvent wiping or immersion. **NOTE** Materials used must not have harmful effect on titanium alloys.	As Req'd	Turcoform solvent cleaner T-800 Alternates:	Room	Room
			Turcoform T-3828 emulsion cleaner or equivalent	49 – 60	120 – 140
2	Clean part to remove scale, if any.	1 – 5 min	CP-1 Alternates:		
			CP-2		
3	Remove excess cleaning media.	As Req'd	Shop Air **WARNING** Nozzle pressure not to exceed 30 psi in accordance with OSHA Standard 1910.242.		
4	Alkaline clean.	4 – 8 min	C-202	52 – 57	125 – 135
5	Rinse thoroughly.	20 – 30 sec	Water	Rm – 82	Rm – 180

Table 22-6. Chem-Milling Titanium Alloys - Continued

Step	Operation	Time	Solutions, Materials, and Current	Temp °C	Temp °F
6	Dry. **NOTE** Parts requiring no mask need not be dried.	As Req'd	Air	Room	Room
7	Mask as necessary. **NOTE** Part must be thoroughly clean and dry prior to masking.	As Req'd	Turcoform mask 522 or comparable natural or synthetic elastomers		
8	Dry maskant.	30 min	Air	Room	Room
9	Cure maskant.	60 min	Oven	160 – 166	320 – 330
10	Cool part to room temperature before continuing. **NOTE** Do not allow the masked parts to touch each other or other objects prior to, during, or immediately after either air or oven curing because the parts would stick together. The maskant would be damaged when the parts were separated.	As Req'd			
11	Scribe. **NOTE** Refer to Table 22-1 for details on scribing and patching and for determining etch rate and etch time.	As Req'd			
12	Peel away the scribed maskant.	As Req'd			
13	Rack parts as necessary to minimize or eliminate gas entrapment on surfaces being etched.	As Req'd			

Table 22-6. Chem-Milling Titanium Alloys - Continued

Step	Operation	Time	Solutions, Materials, and Current	Temp °C	Temp °F
14	Immerse in chem-mill etch solution. **NOTE** As etch rate varies with etch, the alloys being etched, and the concentration of the etchant, the etch rate should be determined frequently. Rotate parts as necessary to obtain uniform etching. **WARNING** Process 8 Mn titanium alloy in the etch bath only if the hydrogen content is less than 80 ppm and the depth of cut is a maximum of ½ the thickness of the sheet. Do not process alloy 13V-11Cr-3A1 because of gross hydrogen pickup.	80 – 90% of calculated etch time	C-320		
15	Remove from etch solution and rinse thoroughly. If a hose is used, avoid excessive pressure which may lift the maskant at cut edges.	As Req'd	Water	Room	Room
16	Examine thoroughly and determine how much metal has been removed. Reimmerse or remove maskant for next step-cut and reimmerse as applicable. **NOTE** Continue chem-milling only if examination in Step 16 revealed no discrepancies in the milled surfaces. Otherwise correct condition causing discrepancy prior to proceeding.	As Req'd			

Table 22-6. Chem-Milling Titanium Alloys - Continued

Step	Operation	Time	Solutions, Materials, and Current	Temp °C	Temp °F
17	Etch until the required amount of metal has been removed.	As Req'd			
18	Rinse.	20 – 30 sec	Water, deionized	Room	Room
19	Remove mask by peeling.	As Req'd			
20	Rinse.	15 – 30 sec	Water	Rm – 82	Rm – 180
21	Dry.	As Req'd	Shop Air	Room	Room
22	Inspect the chem-milled part. **NOTE** The chem-milled surface shall have a smooth satin finish, free from pits, and evidence of irregular etch rate. Unevenness of edges due to masking imperfections shall not be considered as pits. The chemical mill line shall be well defined and shall not deviate from the ideal line by more than ± 0.40 inch round sharp edges to a radius of 0.005 – 0.030 inch, or to a curved or flat surface to fair smoothly with adjacent surfaces.	As Req'd			

CHAPTER 23
ELECTROPOLISHING

23.1 PURPOSE.

This chapter provides instructions for the electropolishing of metals.

23.2 GENERAL.

Electropolishing is an electrochemical process, whereby metal is removed rather than deposited. It is the reverse process of electroplating. Although it has many decorative applications, electropolishing serves various useful functions such as:

a. Polishing or buffing

b. Improved appearance

c. Smoothing and preparation for plating, anodizing, or conversion coating

d. Removal of excess material as desired

e. Improving ref1ectivity and corrosion resistance

f. Burr removal

g. Stress-relief caused by mechanical removal of metal

h. Descaling

Surfaces to be electropolished usually consist of many irregularities referred to as projections and impressions. Electropolishing eliminates these irregularities by selectively dissolving the projections, or leveling, and producing brightness. Macropolishing is the leveling of coarse projections while the dissolution of smaller microscopic surface irregularities is referred to as micropolishing. When macro- and micro-polishing take place simultaneously, smoothing and brightness occur respectively. However, either can, in certain instances, occur independently of the other. Brightness does not always imply smoothness and, alternately, smoothness can exist without brightness.

23.3 POLISHING APPLICATION.

a. Electropolishing shall be accomplished, when required, after all basis metal heat treatments and mechanical operations, such as machining, brazing, welding, forming, and perforating of the article, have been completed.

b. Electropolishing can be accomplished on aluminum, carbon steel, copper and its alloys, nickel and its alloys, and stainless steel.

c. Regardless of the metal or alloy, surface conditions will determine to large extent the degree of successful electropolishing. Contributing factors include: grain size, nonmetallic inclusions, nonuniform structure, directional roll marks, and scale contamination. Fine grain deposits are more important than bright electroplated items when true reflective finishes are required.

d. Clean parts are essential for best electropolishing results. A variety of techniques, typically found in plating shops, may be used. These include: vapor degreasing, soak cleaning, electrocleaning, wet or dry blasting, pickling, or alkaline cleaning. The type of metal and surface condition will dictate the appropriate cleaning procedure.

23.4 EQUIPMENT.

23.4.1 Tank Construction. Tanks are generally constructed of mild steel lined with polyvinyl chloride.

23.4.2 Ventilation. The tank shall be equipped with a positive ventilation system capable of meeting or exceeding the ventilation requirements of the AFOSHSTD 48-2.

23.4.3 Filtration. Periodic filtration through activated carbon should be provided. Rate of filtration should be sufficient to provide a minimum of one complete turnover of solution per hour. Filter material may be Dynel, polypropylene, or Teflon.

23.4.4 Agitation.

a. Mechanical agitation should be provided to eliminate gas streaking due to the evolution of oxygen, also high current density burns are eliminated and a better finish is usually produced.

b. If air agitation is used, air volume must be controlled and uniform to prevent destruction of the electropolishing film. Air agitation is not recommended for alkaline solutions.

23.4.5 Anodes. Electropolishing is conducted in much the same manner as plating. However, since the metal is removed rather than deposited, the parts being processed are made anodic (positive) and the anodes, as in plating, become negative and are called cathodes. The cathode to anode area ratio should be at least 2:1. Cathodes may be made of carbon, stainless steel, copper, or lead (preferred metal).

23.5 POWER SOURCE.

Electropolishing requires Direct Current (DC) which can be supplied from either generators or rectifiers. Each electropolishing tank should have a separate power source with a means for adjusting the current as well as an ammeter and a voltmeter. Most electropolishing is done at current densities from 5.4 – 54 A/dm^2 (50 – 150 ASF).

23.6 BATH OPERATION.

a. The electropolishing tank closely resembles a plating tank except the current is reversed. The item to be electropolished is racked with firm positive contact and placed in the center of the tank parallel to the cathode rows on either side. Distance between the anode and cathode range between several inches and several feet, depending on the size and geometry of the part. Care must be taken to position the entire surface of the item equidistant or as nearly as possible from the cathodes as electropolishing action is greater in high current density areas. Large variances in distance could result in uneven and undesirable surface finishes.

b. Direct current is applied so that the item is made the anode (positive) thus metal is removed rather than deposited. Current generally ranges between 9 and 24 volts depending on the size of the item, distance from the cathode and the electrolyte being used. Since most electropolishing solutions have a high electrical resistance and tend to overheat, provisions should be made to heat and cool the solution.

c. Rinsing is an important phase of the process. The part should be given a thorough rinsing in warm water followed by a dip in a dilute acid or alkali solution then given a warm spray rinse or a dip in hot distilled water. The acid or alkali dip is important in preventing a milky or cloudy appearance on the surface of dried items.

d. Finishes from satin to mirror bright are produced by controlling time and/or temperature. Low temperature and short immersion times will produce finishes with a satin appearance. Bright finishes are obtained by increasing time and temperature. Higher temperatures and current densities decrease time necessary to produce bright finishes as well as increase metal removal rate.

23.7 TYPICAL SOLUTIONS.

a. There are two basic types of electropolishing solutions:

(1) Infinite life – in which the removed metal forms a sludge and does not interfere with the operation. This type of solution can be decanted, desludged then reused.

(2) Finite life – in which the solution is consumed and at some stage the solution becomes ineffective and must be discarded and replaced.

b. Solutions are kept at optimum conditions by periodic solution analysis and regeneration.

c. The following typical solutions may be used for electropolishing. However, approved proprietary solutions may be substituted if preferred.

(1) Aluminum

C-131	
Sodium carbonate	15%
Trisodium Phosphate	5%
Water	Remainder
Temperature	74 – 88°C (165 – 190°F)
Current density	5.4 – 6.5 A/dm^2 (50 – 60 ASF)
C-123	
Sulfuric acid	1 – 60%
Hydrofluoric acid	0.2 – 1.5%
Water	Remainder
Temperature	60°C (140°F)
Current density	10.8 A/dm^2 (100 ASF)
C-124	
Orthophosphoric acid	10%
Sulfuric acid	60%
Nitric acid	1%
Water	Remainder
Temperature	96°C (205°F)
Current density	21.6 A/dm^2 (200 ASF)

(2) Carbon Steel

C-125	
Hydrochloric acid	25%
Glycerine	25%
Temperature	Room
Current density	1.6 A/dm^2 (15 ASF)

C-132

Sulfuric acid	15%
Orthophosphoric acid	63%
Chromic acid	10%
Water	Remainder
Temperature	52°C (125°F)
Current density	5.4 – 108 A/dm^2 (50 – 1000 ASF)

(3) Copper Alloys

C-126

Chromic acid	12.5 parts/wt
Sodium dichromate	37.5 parts/wt
Acetic acid	12.5 parts/wt
Sulfuric acid	10.0 parts/wt
Water	100 parts/wt
Temperature	30°C (86°F)
Current density	26.9 – 108 A/dm^2 (250 – 1000 ASF)

C-133

Arsenic acid	15%/wt
Orthophosphoric acid	55%/wt
Chromic acid	3%/wt
Water	27%/wt
Temperature	54°C (130°F)
Current density	54 A/dm^2 (500 ASF)

(4) Nickel Alloys

C-127

Sulfuric acid	70%
Water	30%
Temperature	Room
Current density	1.6 A/dm^2 (15 ASF)

C-128

Orthophosphoric acid	15 – 70%
Sulfuric acid	15 – 60%
Water	Remainder
Temperature	Room
Current density	1.6 A/dm^2 (15 ASF)

(5) Stainless Steel

C-129

Orthophosphoric acid	75 – 100%
Water	Remainder
Temperature	66°C (150°F)
Current density	32.3 A/dm^2 (300 ASF)

C-130

Sulfuric acid	15%
Orthophosphoric acid	63%
Water	Remainder
Temperature	27 – 79°C (80 – 175°F)
Current density	5.4 A/dm^2 (50 ASF) Minimum

Table 23-1. Electropolishing Procedure

Step	Operation	Time	Solutions, Materials, and Current	Temp °C	Temp °F
1	Vapor degrease. **WARNING** Solvent vapors are toxic. Avoid inhalation of vapors or contact with skin or clothing.	As Req'd	ASTM D4081 and ASTM D4376 (Tetrachloroethylene) Alternates:	120 – 124	248 – 256
			ASTM D4080 (Trichloroethylene) **NOTE** Not to be used where prohibited by state regulations.	88 – 90	187 – 194

Table 23-1. Electropolishing Procedure - Continued

Step	Operation	Time	Solutions, Materials, and Current	Temp °C	Temp °F
2	Rack and mask if necessary.	As Req'd	Table 2-2		
3	Electropolish.	As Req'd	For aluminum C-131 5.4 – 6.5 A/dm^2 (50 – 60 ASF) Alternates:	74 – 88	165 – 190
			C-123 10.8 A/dm^2 (100 ASF)	60	140
			C-124 21.6 A/dm^2 (200 ASF)	96	205
			For carbon steel C-125 1.6 A/dm^2 (15 ASF) Alternates:	Room	Room
			C-132 5.4 – 108 A/dm^2 (50 – 1000 ASF)	52	125
			For copper alloys C-126 26.9 – 108 A/dm^2 (250 – 1000 ASF)	30	86
			C-133 54 A/dm^2 (500 ASF)	54	130
			For nickel alloys C-127 1.6 A/dm^2 (15 ASF) Alternates:	Room	Room
			C-128 1.6 A/dm^2 (15 ASF)	Room	Room
			For stainless steel C-129 32.3 A/dm^2 (300 ASF) Alternates:	66	150
			C-130 5.4 A/dm^2 (50 ASF)	27 – 79	80 – 175
4	Rinse.	As Req'd	Water	49 – 71	120 – 160
5	Acid or alkali dip.	30 – 60 sec	C-122 Immersion Only or	Room	Room
			C-131 Immersion Only	Room	Room
6	Spray rinse or dip.	As Req'd	Distilled water	49 – 71	120 – 160
7	Dry.	As Req'd	Shop Air	Room	Room

CHAPTER 24
MAGNESIUM SURFACE TREATMENTS

24.1 PURPOSE.

This chapter provides instructions for the application of magnesium surface treatments. Refer to Specifications SAE AMS-M-3171 and ASTM D1732.

24.2 GENERAL.

Magnesium, because of its light weight and strength, is highly exploited in the aircraft industry. But since it is a very active metal and unable to create a good protective coating to protect itself, like aluminum, its utilization depends on the availability of effective protective measures. The selection of a suitable finishing system depends on the service environment particularly with respect to oxygen, moisture, and temperature. The anti-corrosion treatments listed herein are based upon the use for which the magnesium is intended. Maximum corrosion protection is obtained by the following sequential applications HAE or DOW 17, wash primer coat, 4 coats of zinc chromate vinyl resin primer with a top coat of alkyd or alkyd-vinyl enamel.

24.3 TYPES OF TREATMENT.

Magnesium corrosion treatments are divided into 8 types: chrome pickle treatment, sealed chrome pickle treatment, dichromate treatment, galvanic anodizing treatment, caustic anodizing treatment, chromic acid treatment, fluoride anodizing treatment plus corrosion prevention treatment, and chromate treatment.

24.3.1 Chrome Pickle Treatment (Type I). The chrome pickle treatment is applicable to all alloys where close dimensional tolerances are not required. The etching action of the chrome pickle removes up to 0.6 mil of surface (thus limiting its use) unless allowances are made or the amount of surface removal can be tolerated. Type I treatment is used for temporary storage, domestic shipment, electrical bonding, touching-up of previously treated work, and brush applications when permitted. Parts processed by this treatment shall not be subjected to temperatures above 232°C (450°F). The color of the coating is matte gray to yellow-red iridescent with a degree of fine surface etching. Smooth, bright brassy, coated surfaces are somewhat inferior for painting but are equally protective.

24.3.2 Sealed Chrome Pickle Treatment (Type II). The sealed chrome pickle treatment is essentially a combination treatment of first applying the chrome pickle of Type I and then sealing it in a dichromate-fluoride bath (Type III). The sealed chrome pickle provides corrosion protection equal to the dichromate treatment (Type III). This coating is used for prolonged general protection of all alloys where close dimensional tolerances are not required. Parts processed by this treatment shall not be subjected to temperatures above 232°C (450°F). The coating formed is matte gray to yellow iridescent through to brown depending on the magnesium alloy being processed.

24.3.3 Dichromate Treatment (Type III). The dichromate treatment is the most common type of dip treatment for magnesium applications. It is used for prolonged general protection on all alloys except EK 30A, EK 41A, HM 21A, HM 31A, HK 31A, La 141A, and M 1A. This treatment causes no significant dimensional change therefore is ideal for work for which close tolerances are required. It is usually applied after machining and prior to painting. Parts processed by this treatment shall not be subjected to temperatures above 288°C (550°F). The coating varies from light to dark brown depending on the alloy being processed.

24.3.4 Galvanic Anodize Treatment (Type IV). The galvanic anodizing treatment is an alternate process for alloys which cannot be dichromate treated (Type III). However this process is not limited to only those alloys. This process makes use of the electrical potential between the tank or hung steel cathodes and the part. Parts must be racked and electrically connected to the tank or cathodes. No exterior electrical source is necessary. This process causes no dimensional changes and is usually applied after machining. Parts processed by this treatment shall not be subjected to temperatures above 288°C (550°F). The coating formed is dark brown to black and is used for prolonged general protection of all alloys.

24.3.5 Caustic Anodize Treatment (Type V). The caustic anodizing treatment is an electrochemical application which produces a two-layer coating. A light coating about 0.02 mil thick obtained at low voltage and a thicker darker layer approximately 1.2 mil thick produced at higher voltage. The dark coating is hard, relatively brittle, highly abrasion resistant, and has excellent paint base characteristics. There are numerous treatments under Type V of which the 11AE treatment is the most common. The appearance of the coating is determined by the treatment used. The produced coating is used for prolonged general protection of all magnesium alloys.

24.3.6 Chromic Acid Treatment (Brush on) Type VI. The chromic acid treatment is applicable to all magnesium alloys too large to be immersed. It can be applied by brush or spray. It is used for temporary storage, touch-up work, or repair of previously coated surfaces. Parts processed by this treatment shall not be subjected to temperatures above 232°C (450°F). The coating formed

will be yellow iridescent to dark brown depending on the condition of the solution and the alloy being processed.

24.3.7 Fluoride Anodize Treatment (Type VII). The fluoride anodizing treatment is an electrochemical application applicable to all magnesium alloys. The treatment is essentially an anodic treatment followed by a stripping operation to remove the fluoride coating and then post-treated with a corrosion prevention treatment to provide the optimum protection. The treatment lends to no detectable dimensional loss likely to cause difficulty even when working to definite fine limits. The film itself has no measurable thickness. This treatment is used as a substitute for shot or grit blasting, by providing a relatively inert film and a good base favorable for other type treatments such as Types I, III and IV. The coating produces a uniform clean white or pearl-gray film.

24.3.8 Chromate Treatment (Type VIII). The chromate treatment is a chemical type treatment applicable to all magnesium alloys. The coating may be applied by immersion of parts or by brush. The coating is somewhat like that of Type III and may be substituted for the Type I, III or VI treatments. It causes no appreciable dimensional changes and is normally applied after machining. It provides a protective coating and a satisfactory paint base. Parts processed by this treatment shall not be subjected to temperatures above 288°C (550°F). The coating appearance ranges from dark brown to light reddish-brown.

24.4 DIMENSIONAL CHANGES.

Unless otherwise specified, the dimensional changes resulting from treatment shall comply with the requirements stated in Table 24-2. The indicated dimensional changes do not include those resulting from the various cleaning processes. It should be noted that the maximum corrosion-resistance can be achieved even with the minimum value of the range for each type. No significant advantages are gained by deposits heavier than the specified range.

24.5 CHEMICAL CONVERSION COATINGS.

In addition to the chemical conversion coating detailed, there are others such as the half-hour HAE, chrome manganese, and the selenious acid. Coatings produced from these treatments range in color from brown to black. Each has its own advantages and disadvantages. For example, the HAE requires 30 minutes in the bath and the pH of the solution is critical (5.90 – 6.18). However, it exhibits the maximum corrosion protection and is an excellent paint base. The chrome-manganese treatment has excellent abrasion resistance, but is improved by baking at 356°F for 30 minutes. The range of pH tolerance of the chromic-manganese bath (4.0 – 6.0) makes easy control. The selenate coatings are used to repair damaged chromate type coatings, but are not suitable as a base for paint systems. In addition, selenates are more toxic than chromates.

24.6 ANODIC COATINGS.

ASTM D1732 details several treatments most of them used with magnesium, namely the Dow 17, the HAE, and CR-22. Anodic coatings on magnesium are much softer, less dense, and less protective than they are on aluminum. Usually, anodic coatings on magnesium require an additional treatment with an organic finish or an inorganic sealant. In addition to the coatings detailed in ASTM D1732, the Manodyz process is often used for an anodic coating. The coating produced is one of excellent wear resistance with good dielectric properties.

24.7 OTHER COATING SYSTEMS.

The stannate protective coating for magnesium consists partly of a magnesium-tin-hydroxide and partly of metallic tin. This type coating has some of the properties of a chemical conversion coating and some of the properties of a metallic coating. The film, conformed from a stannate bath, provides good corrosion resistance and can be used as a base for paint systems.

24.8 EQUIPMENT.

24.8.1 Tank Construction.

Solution	Tank Material
Alkaline cleaner	Steel
Caustic anodize	Steel
Chromic acid	Lead lined steel, stainless steel or vinyl lined steel
Chrome pickle	316 Stainless steel or steel lined with lead, or vinyl base materials
Dichromate	316 Stainless steel or steel lined with lead, vinyl base materials
Fluoride anodize	Steel, ceramic, rubber, or steel lined with vinyl
Galvanic anodize	Steel
Hydrofluoric acid, acid fluoride, and neutralizing	Steel tank lined with lead, rubber, or vinyl

24.8.2 Ventilation. All tanks in the magnesium treatment line except cold water rinses shall be equipped with a positive ventilation system capable of meeting or exceeding the requirements of AFOSHSTD 48-2.

24.8.3 Agitation. All processing tanks should be equipped with agitation to aid in heat transfer and the maintenance of a homogeneous solution. Agitation may be provided by clean filtered air or by mechanical methods.

Table 24-1. Correlation of Treatment Types

Treatment	Type	Commercial Designations
Chrome Pickle	I	Dow Nr 1, Macromag 101
Sealed Chrome Pickle	II	Dow Nr 10
Dichromate	III	Dow Nr 7, Macromag D-7
Galvanic Anodizing	IV	Dow Nr 9, Macromag D-9
Caustic Anodizing	V	Dow Nr 12
Chromic Acid Brush-On	VI	Dow Nr 19, Macromag D-1
Fluoride Anodizing	VII	Magnesium Elektron
Chromate	VIII	Iridite Nr 15

Table 24-2. Dimensional Change Requirements of Coatings in Mils

Process	MIN	MAX	Typical [1]
Type I – Chrome Pick1e	0.6	1.0	0.8
Type III – Dichromate	—	—	[2]
Type IV – Galvanic	—	—	[2]
Type VI – Chromic Acid Brush-On	—	—	[2]
Type VII – Fluoride Anodizing	—	—	[3]
Type VIII – Chromage	—	—	[2]

[1] On AZ31B Magnesium Alloy.
[2] No appreciable dimension changes.
[3] No appreciable dimension changes with chromic acid pickle and Type III process.

Table 24-3. Process for Application of Type I Treatment

Step	Operation	Time	Solutions, Materials, and Current	Temp °C	Temp °F
1	Vapor degrease. **WARNING** Solvent vapors are toxic. Avoid inhalation of vapors or contact with skin or clothing.	As Req'd	ASTM D4081 and ASTM D4376 (Tetrachloroethylene) Alternates:	120 – 124	248 – 256
			ASTM D4080 (Trichloroethylene) **NOTE** • Not to be used where prohibited by state regulations. • Methyl or wood alcohol (CH_3OH) is specifically prohibited as a solvent cleaner for magnesium alloys.	88 – 90	187 – 194

Table 24-3. Process for Application of Type I Treatment - Continued

Step	Operation	Time	Solutions, Materials, and Current	Temp °C	Temp °F
2	Remove paint.	As Req'd	Any alkaline (caustic) liquid paint remover **NOTE** Solvent type paint removers may be used provided they are followed by a wax-free solvent.	As required by vendor's instructions	
3	Rinse.	As Req'd	Water	Rm – 82	Rm – 180
4	Rack part for processing.	As Req'd	Racks material may be stainless steel or monel.		
5	Alkaline clean.	3 – 10 min	C-209 Immersion Only Alternates:	88 – 99	190 – 210
			C-206 Immersion Only	88 – 99	190 – 210
6	Rinse.	30 – 60 sec	Water	Rm – 82	Rm – 180
7	Pickle.	1 – 15 min	C-134 Immersion Only	88 – 99	190 – 210
8	Rinse.	30 – 60 sec	Water	Room	Room
9	Chrome pickle treat. **NOTE** Allow a minimum of 5 seconds drain time over solution.	½ – 2 min	For wrought magnesium C-448 Immersion Only Alternates:	21 – 32	70 – 90
			For cast magnesium C-456 Immersion Only	21 – 60	70 – 140
10	Rinse.	As Req'd	Water	Room	Room
11	Rinse.	As Req'd	Water	49 – 82	120 – 180
12	Dry.	As Req'd	Shop Air	Room	Room
13	Examine coating. **NOTE** The surface shall be free from breaks, discontinuities, scratches, and other harmful damage.	As Req'd			

Table 24-4. Process for Application of Type II Treatment

Step	Operation	Time	Solutions, Materials, and Current	Temp °C	Temp °F
1	Vapor degrease. **WARNING** Solvent vapors are toxic. Avoid inhalation of vapors or contact with skin or clothing.	As Req'd	ASTM D4081 and ASTM D4376 (Tetrachloroethylene) Alternates:	120 – 124	248 – 256
			ASTM D4080 (Trichloroethylene) **NOTE** • Not to be used where prohibited by state regulations. • Methyl or wood alcohol (CH_3OH) is specifically prohibited as a solvent cleaner for magnesium alloys.	88 – 90	187 – 194
2	Remove paint.	As Req'd	Any alkaline (caustic) liquid paint remover **NOTE** Solvent type paint removers may be used provided they are followed by a wax-free solvent.	As required by vendor's instructions	
3	Rinse.	As Req'd	Water	Rm – 82	Rm – 180
4	Rack part for processing.	As Req'd	Rack material may be stainless steel or monel.		
5	Alkaline clean.	3 – 10 min	C-209 Immersion Only Alternates:	88 – 99	190 – 210
			C-206 Immersion Only	88 – 99	190 – 210
6	Rinse.	30 – 60 sec	Water	Rm – 82	Rm – 180
7	Pickle.	1 – 15 min	C-134 Immersion Only	88 – 99	190 – 210
8	Rinse.	30 – 60 sec	Water	Room	Room

Table 24-4. Process for Application of Type II Treatment - Continued

Step	Operation	Time	Solutions, Materials, and Current	Temp °C	Temp °F
9	Chromic pickle treat. **NOTE** Allow a minimum of 5 seconds drain time over solution.	½ – 2 min	For wrought magnesium C-448 Immersion Only Alternates:	21 – 32	70 – 90
			For cast magnesium C-456 Immersion Only	21 – 60	70 – 140
10	Rinse.	As Req'd	Water	Room	Room
11	Dichromate treat.	25 – 35 min	C-449 Immersion Only	93 – 100	200 – 212
12	Rinse.	As Req'd	Water	Room	Room
13	Rinse.	As Req'd	Water	49 – 82	120 – 180
14	Dry.	As Req'd	Shop Air	Room	Room
15	Examine coating. **NOTE** The surface shall be free from breaks, discontinuities, scratches, and other harmful damage.	As Req'd			

Table 24-5. Process for Application of Type III Treatment

Step	Operation	Time	Solutions, Materials, and Current	Temp °C	Temp °F
1	Vapor degrease. **WARNING** Solvent vapors are toxic. Avoid inhalation of vapors or contact with skin or clothing.	As Req'd	ASTM D4081 and ASTM D4376 (Tetrachloroethylene) Alternates:	120 – 124	248 – 256
			ASTM D4080 (Trichloroethylene) **NOTE** • Not to be used where prohibited by state regulations. • Methyl or wood alcohol (CH_3OH) is specifically prohibited as a solvent cleaner for magnesium alloys.	88 – 90	187 – 194
2	Remove paint.	As Req'd	Any alkaline (caustic) liquid paint remover **NOTE** Solvent type paint removers may be used provided they are followed by a wax-free solvent.	As required by vendor's instructions	
3	Rinse.	As Req'd	Water	Rm – 82	Rm – 180
4	Rack part for processing.	As Req'd	Racks material may be 316 stainless steel or monel.		
5	Alkaline clean.	3 – 10 min	C-209 Immersion Only Alternates:	88 – 99	190 – 210
			C-206 Immersion Only	88 – 99	190 – 210
6	Rinse.	30 – 60 sec	Water	Rm – 82	Rm – 180
7	Pickle.	1 – 15 min	C-134 Immersion Only **NOTE** If no corrosion is present, skip Steps 7, 8 and proceed to Step 9.	88 – 99	190 – 210
8	Rinse.	As Req'd	Water	Room	Room

Table 24-5. Process for Application of Type III Treatment - Continued

Step	Operation	Time	Solutions, Materials, and Current	Temp °C	Temp °F
9	Pickle.	½ – 5 min	C-135 Immersion Only Alternates:	Room	Room
			C-136 Immersion Only	21 – 32	70 – 90
10	Rinse.	30 – 60 sec	Water	Room	Room
11	Dichromate treat.	25 – 35 min	C-449 Immersion Only	93 – 100	200 – 212
12	Rinse.	As Req'd	Water	Room	Room
13	Rinse.	As Req'd	Water	49 – 82	120 – 180
14	Dry.	As Req'd	Shop Air	Room	Room
15	Examine coating. **NOTE** The surface shall be free from breaks, discontinuities, scratches, and other harmful damage.	As Req'd			

Table 24-6. Process for Application of Type IV Treatment

Step	Operation	Time	Solutions, Materials, and Current	Temp °C	Temp °F
1	Vapor degrease. **WARNING** Solvent vapors are toxic. Avoid inhalation of vapors or contact with skin or clothing.	As Req'd	ASTM D4081 and ASTM D4376 (Tetrachloroethylene) Alternates:	120 – 124	248 – 256
			ASTM D4080 (Trichloroethylene) **NOTE** • Not to be used where prohibited by state regulations. • Methyl or wood alcohol (CH_3OH) is specifically prohibited as a solvent cleaner for magnesium alloys.	88 – 90	178 – 194

Table 24-6. Process for Application of Type IV Treatment - Continued

Step	Operation	Time	Solutions, Materials, and Current	Temp °C	Temp °F
2	Remove paint.	As Req'd	Any alkaline (caustic) liquid paint remover **NOTE** Solvent type paint removers may be used provided they are followed by a wax-free solvent.	As required by vendor's instructions	
3	Rinse.	As Req'd	Water	Rm – 82	Rm – 180
4	Rack part for processing.	As Req'd	Racks material may be stainless steel, monel, or phosphorous bronze.		
5	Alkaline clean.	3 – 10 min	C-209 Immersion Only Alternates:	88 – 99	190 – 210
			C-206 Immersion Only	88 – 99	190 – 210
6	Rinse.	30 – 60 sec	Water	Rm – 82	Rm – 180
7	Pickle.	1 – 15 min	C-134 Immersion Only	88 – 99	190 – 210
8	Rinse.	30 – 60 sec	Water	Room	Room
9	Pickle.	½ – 5 min	C-135 Immersion Only Alternates:	Room	Room
			C-136 Immersion Only	21 – 32	70 – 90
10	Rinse.	30 – 60 sec	Water	Room	Room
11	Galvanic anodize treat. (10 – 30 min as req'd to provide 70 ampere MIN per square foot of anode area.)	As Req'd	C-450 Current is provided by galvanic action between the part and the steel cathode. If current density falls below 0.2 A/dm^2 (2 ASF) external current shall be applied to produce a minimum of 0.2 A/dm^2 (2 ASF) current density.	49 – 60	120 – 140
12	Rinse.	30 – 60 sec	Water	Room	Room
13	Rinse.	30 – 60 sec	Water	49 – 82	120 – 180

Table 24-6. Process for Application of Type IV Treatment - Continued

Step	Operation	Time	Solutions, Materials, and Current	Temp °C	Temp °F
14	Dry.	As Req'd	Shop Air	Room	Room
15	Examine coating. **NOTE** The surface shall be free from breaks, discontinuities, scratches, and other harmful damage.	As Req'd			

Table 24-7. Process for Application of Type V Treatment

Step	Operation	Time	Solutions, Materials, and Current	Temp °C	Temp °F
1	Vapor degrease. **WARNING** Solvent vapors are toxic. Avoid inhalation of vapors or contact with skin or clothing.	As Req'd	ASTM D4081 and ASTM D4376 (Tetrachloroethylene) Alternates:	120 – 124	248 – 256
			ASTM D4080 (Trichloroethylene) **NOTE** • Not to be used where prohibited by state regulations. • Methyl or wood alcohol (CH_3OH) is specifically prohibited as a solvent cleaner for magnesium alloys.	88 – 90	178 – 194
2	Remove paint.	As Req'd	Any alkaline (caustic) liquid paint remover **NOTE** Solvent type paint removers may be used provided they are followed by a wax-free solvent.	As required by vendor's instructions	
3	Rinse.	As Req'd	Water	Rm – 82	Rm – 180

Table 24-7. Process for Application of Type V Treatment - Continued

Step	Operation	Time	Solutions, Materials, and Current	Temp °C	Temp °F
4	Rack part for processing.	As Req'd	Rack material may be high aluminum content magnesium alloys of aluminum alloys containing above 8% magnesium.		
5	Alkaline clean.	3 – 10 min	C-209 Immersion Only Alternates:	88 – 99	190 – 210
			C-206 Immersion Only	88 – 99	190 – 210
6	Rinse.	30 – 60 sec	Water	Rm – 82	Rm – 180
7	Pickle.	1 – 15 min	C-134 Immersion Only	88 – 99	190 – 210
8	Rinse.	30 – 60 sec	Water	Room	Room
9	Anodize treat.	15 – 25 min	C-451 Immerse part in solution and allow 3 – 5 minutes before application of current. Then apply 6 volts of direct current. **NOTE** If preferred, 6 – 24 volts of alternating current may be used in lieu of direct current.	74 – 79	165 – 176
10	Rinse.	5 min MIN	Water	Room	Room
11	Neutralize.	1 – 2 min	C-452 Immersion Only	Room	Room
12	Rinse.	30 – 60 sec	Water	Room	Room
13	Rinse.	30 – 60 sec	Water	49 – 82	120 – 180
14	Dry.	As Req'd	Shop Air	Room	Room
15	Examine coating. **NOTE** The surface shall be free from breaks, discontinuities, scratches, and other harmful damage.	As Req'd			

Table 24-8. Process for Application of Type VI Treatment

Step	Operation	Time	Solutions, Materials, and Current	Temp °C	Temp °F
1	Remove oil, grease, dirt, etc.	As Req'd	Vapor degrease, if possible. Otherwise hand clean with suitable solvent. **NOTE** Methyl or wood alcohol (CH_3OH) is specifically prohibited as a solvent for magnesium alloys.		
2	Remove corrosion, if necessary.	As Req'd	Vapor blast, sand, hard bristle brush, grind, or other suitable method		
3	Chromic acid treat.	½ – 3 min	C-453 Solution may be applied by brushing, spraying, or dipping.	21 – 32	70 – 90
4	Rinse.	30 – 60 sec	Water	Room	Room
5	Dry.	As Req'd	Shop Air	Room	Room
6	Examine coating. **NOTE** The surface shall be free from breaks, discontinuities, scratches, and other harmful defects.	As Req'd			

Table 24-9. Process for Application of Type VII Treatment

Step	Operation	Time	Solutions, Materials, and Current	Temp °C	Temp °F
1	Vapor degrease. **WARNING** Solvent vapors are toxic. Avoid inhalation of vapors or contact with skin or clothing.	As Req'd	ASTM D4081 and ASTM D4376 (Tetrachloroethylene) Alternates:	120 – 124	248 – 256
			ASTM D4080 (Trichloroethylene) **NOTE** • Not to be used where prohibited by state regulations. • Methyl or wood alcohol (CH_3OH) is specifically prohibited as a solvent cleaner for magnesium alloys.	88 – 90	187 – 194
2	Remove paint.	As Req'd	Any alkaline (caustic) liquid paint remover	As per manufacturer's instructions	
3	Rinse.	As Req'd	Water	Rm – 82	Rm – 180
4	Rack part for processing.	As Req'd	Racks material may be magnesium alloys such as AZ31B, AZ63A, AZ91C, or steel racks coated with rubber, synthetic rubber, or polyvinylchloride.		
5	Alkaline clean.	3 – 10 min	C-209 Immersion Only Alternates:	88 – 100	190 – 212
			C-206 Immersion Only	88 – 100	190 – 212
6	Rinse.	30 – 60 sec	Water	Rm – 82	Rm – 180
7	Fluoride anodize treat. (10 – 15 min or until current falls below 0.5 A/dm^2 (5 ASF))	10 – 15 min	C-454 Voltage is to be increased progressively until 120 volts are attained.	16 – 30	60 – 86
8	Rinse.	30 – 60 sec	Water	49 – 82	120 – 180
9	Pickle.	1 – 15 min	C-134 Immersion Only	88 – 99	190 – 210
10	Rinse.	30 – 60 sec	Water	Room	Room
11	Pickle.	½ – 5 min	C-135 Immersion Only Alternates:	Room	Room
			C-136 Immersion Only	21 – 32	70 – 90
12	Rinse.	30 – 60 sec	Water	Room	Room

Table 24-9. Process for Application of Type VII Treatment - Continued

Step	Operation	Time	Solutions, Materials, and Current	Temp °C	Temp °F
13	Dichromate treat.	40 – 60 min	C-449 Immersion Only	88 – 99	190 – 210
14	Rinse.	As Req'd	Water	Room	Room
15	Rinse.	As Req'd	Water	Room	Room
16	Dry.	As Req'd	Shop Air	Room	Room
17	Seal. a. Heat part to 200°C (392°F), for ½ hr. b. Cool work to 60°C (140°F). c. Dip work into a baking type epoxy surface coating resin conforming to MIL-C-46079. d. Remove part and allow solvent to evaporate. e. Repeat Steps 1 thru 4 until 3 coats of resin have been applied.				

Table 24-10. Process for Application of Type VIII Treatment

Step	Operation	Time	Solutions, Materials, and Current	Temp °C	Temp °F
1	Vapor degrease. **WARNING** Solvent vapors are toxic. Avoid inhalation of vapors or contact with skin or clothing.	As Req'd	ASTM D4081 and ASTM D4376 (Tetrachloroethylene) Alternates:	120 – 124	248 – 256
			ASTM D4080 (Trichloroethylene) **NOTE** Not to be used where prohibited by state regulations.	88 – 90	187 – 194
2	Remove paint.	As Req'd	Any alkaline (caustic) liquid paint remover **NOTE** Solvent type paint removers may be used provided they are followed by a wax-free solvent.	As per manufacturer's instructions	

Table 24-10. Process for Application of Type VIII Treatment - Continued

Step	Operation	Time	Solutions, Materials, and Current	Temp °C	Temp °F
3	Rinse.	As Req'd	Water	Rm – 80	Rm – 180
4	Rack part for processing.	As Req'd	Racks material may be polyvinylchloride coated steel or stainless steel.		
5	Alkaline clean.	3 – 10 min	C-209 Immersion Only Alternates:	88 – 99	190 – 210
			C-206 Immersion Only	88 – 99	190 – 210
			C-211 Immersion Only	71 – 82	160 – 180
6	Rinse.	30 – 60 sec	Water	Rm – 80	Rm – 180
7	Pickle.	1 – 15 min	C-134 Immersion Only	88 – 99	190 – 210
8	Rinse.	30 – 60 sec	Water	Room	Room
9	Chromate treat.	15 – 30 sec	C-455 Immersion Only	24 – 38	75 – 100
10	Rinse.	30 – 60 sec	Water	Room	Room
11	Rinse.	30 – 60 sec	Water	49 – 82	120 – 180
12	Dry.	As Req'd	Shop Air	Room	Room

24.8.4 Power Source. The galvanic anodize (Type IV) procedure requires that an ammeter and rheostat shall be connected in the electrical circuit to limit the galvanic current to a maximum of 1.1 A/dm^2 (10 ASF). An external source of current shall be available to maintain the current density above 0.2 A/dm^2 (2 ASF). The caustic anodize (Type V) procedure requires either an alternating or direct current application with alternating current preferred. Voltage requirements may reach 110 volts. The fluoride anodizing (Type VII) procedure requires either an alternating or direct current capability of 110 volts as does the Type V treatments. The electrical circuit must be complete with ammeter, rheostat, cathode bars, if tank is lined, and all necessary equipment to complete the circuit. The power sources will be certified semi-annually. Certification shall include a check of ripple, proper functioning of controls, and accuracy of all meters, counters, and timers which are integral parts of the power source.

24.9 TROUBLESHOOTING FOR TYPE I AND TYPE II MAGNESIUM TREATMENTS.

a. Brown, non-adherent, powdery coating:

(1) The part was in the air too long before rinsing.

(2) The ratio of acid concentration to sodium dichromate content may be too high.

(3) The solution may be too hot due to a small quantity of solution and a large number of parts going through the bath. Cool the bath or use a larger quantity of solution.

(4) The metal is not properly degreased. Brown powder will occur at spots where oil exists.

(5) Solution has been revived too many times. The nitrate buildup causes powdery coatings.

b. Gray, non-adherent, powdery coatings on castings.

(1) This may be minimized or virtually eliminated by treatment with the fluoride modified chrome treatment bath.

(2) The coating is pyrophoric and may flash violently upon impact with the rough surfaces of harder materials such as steel or concrete, or even during grinding.

(3) The part may have been excessively overtreated by keeping in the bath too long. Extreme

care should be taken in handling such parts during further treatment. Upon removal the part should be thoroughly rinsed in cold water, dipped in machine or motor oil, and scrapped. If parts have not been used too severely or damaged by over-pickling and salvage is desirable, the powdery coating may be removed by immersing in a 10 – 20 hydrofluoric acid solution for 5 – 10 minutes. This will remove the powder and render the part safe to handle.

24.10 TROUBLESHOOTING FOR TYPE III TREATMENT.

a. Abnormally heavy and loose powdery coatings:

(1) The hydrofluoric acid or acid fluoride bath is too dilute.

(2) The pH of the dichromate bath is too low. It should not fall below 4.1. The pH is adjusted by additions of NaOH.

(3) Treatment of oxidized, corroded, or flux contaminated parts result in gray to yellow coatings of a loose nature.

(4) Powdery coatings may form when the work contacts the tank or is in an electrical circuit with the tank through metal holding bars, baskets, or other pieces of equipment which contact the tank.

(5) Prolonged treatment in the dichromate bath.

b. Failure to coat or nonuniform coatings:

(1) The pH of the dichromate bath is too high. This is very important when HF is used as a pre-dip on low aluminum-containing alloys such as the AZ31B. Adjust the pH back to 4.1 by additions of chromic acid. The pH change is quite rapid from the lower limit and frequent checks are necessary.

(2) The dichromate concentration is too low in the bath. The dichromate concentration should not fall below 16 oz/gal (12% by weight).

(3) Oily matter has not been properly removed, resulting in a spotted coating where some areas are coated and others are not. Insufficient cleaning alone may not be at fault. Properly cleaned parts may become contaminated by oily matter existing as a film on the fluoride or dichromate bath. This oily film builds up due to inadequate rinsing after alkaline cleaning and perhaps other reasons such as oil in the atmosphere or dripping from overhead equipment, etc.

(4) Previous chrome pickle coating was not completely removed. Use of either solution specified to supplement the alkaline cleaning may be required.

(5) The part was not fluoride treated.

(6) Alloy treated is one where the Type III treatment is not suitable for coating deposit.

(7) Too long an HF dip with alloys such as AZ31B produces a fluoride film that does not break down evenly in the normal time, producing a spotty coating. For these alloys, treatment time should be 30 seconds to 1 minute.

(8) The bath was not kept boiling during the treating period. This is particularly important when processing AZ31B. Minimum bath temperature is 200°F.

24.11 TROUBLESHOOTING FOR TYPE VII TREATMENT.

a. Castings which have received too short a treatment will show some areas with a characteristic whitish or pearl-gray film while other areas may appear not to have responded.

b. Castings which are not free from attached foundry stands will have some areas darker than others. If obstinate areas of foundry stands still remain after treatment, or blemishes which are not being cleaned up as quickly as the rest of the observed surface of the work, mechanical treatment with a stiff wire or bristle brush may be given at this stage and the work returned for a further short period of fluoride anodizing.

c. Painted parts of components should not be normally treated until the bulk of the paint has been removed. Paint films themselves are softened by reaction in the bath. Nickel and copper electroplates can also be removed by the treatment. Unless these precautions are taken, contamination of the bath will result, reducing bath efficiency.

d. Too low a voltage or too short a time in the bath will be usually indicated by a very thin semi-transparent film. On machined surfaces or wrought material, which is initially in good condition, such a thin film may be acceptable.

e. In hollow part or components with re-entrant angles, dark areas may remain in such recesses and indicate gas entrapment. In such cases the items should be turned about once or twice in the bath to ensure complete contact with the liquid.

f. An etched appearance may indicate too hot a bath, possibly operation at too high a voltage, or a bath

too low in ammonium bifluoride. The strength of the bath must not be allowed to fall below 10%. A stronger solution will do no harm but is wasteful.

g. A dense film may indicate the presence of acid radicals other than fluoride. No foreign metals, organic matter, salts, or acid radicals other than fluoride should be introduced into the bath. Pitting of the work surface may also be caused by the presence of the chloride ion.

h. The bath, during continuous operation must be stirred well between batches of items with a wooden or plastic pole to ensure that the upper layers of the liquid are not depleted of the fluoride or become warmer than the bulk of the bath. It may be advantageous to arrange for continuous agitation of the solution by air stream. A large volume of air should not be blown through the bath as it promotes heavy current flow which in turn creates undue heating. Only the merest trickle sufficient to cause a gentle circulation of the liquid in the bath, shall be permitted.

i. In the process of operation, if the tendency of the current to fall away to low values at any voltage up to about 120 volts does not occur, observations should be made to see if the anodizing solution is too weak; a foreign metal insert, rivet, or other attachment is present; part of the clamp that is not made of magnesium is below the surface of the bath solution; the clamp is not one of the materials detailed, or the work is too severely contaminated. In the latter case, this may arise from having been heavily shot-blasted or from the presence in the casting of one or more flux inclusions. It will be found that when the last of the contaminants, iron particles have been removed, the current during anodizing will fall normally.

24.12 TROUBLESHOOTING FOR TYPE VIII TREATMENT.

a. Failure for form coatings:

(1) The pH of the solution is too high.

(2) The solution may be too cold.

(3) The metal is not properly degreased and cleaned. The part was not pickled prior to treatment in the chromic solution.

(4) The ratio of the acid concentration to the chromate salts may be too low by using the improper amount of acid or strength.

b. Non-adherent powdery coatings:

(1) The part may have been of magnesium alloys containing less than 1% aluminum and the improper chromate solution nr 1 used on the part.

(2) The pH of the solution is too low.

(3) The metal is not properly degreased and cleaned. The part was not pickled prior to treatment in the chromate solution.

(4) The ratio of the acid concentration to the chromate salts may be too high by using improper amount of acid or strength.

c. Excessive smut on parts:

(1) The parts may have excessive aluminum smut on aluminum bearing alloys by being kept in the bath too long. This may be minimized or virtually eliminated by proper treatment time.

(2) Not applicable.

CHAPTER 25
PASSIVATION OF STAINLESS STEEL

25.1 PURPOSE.

This chapter provides instruction of the passivation of austenitic, ferritic, martensitic, and precipitation-hardened, corrosion-resistant steels. Passivation shall meet the requirements of Specification SAE AMS-QQ-P-35.

25.2 GENERAL.

During the processing operations such as forming, grinding, lapping, machining, tumbling, etc., iron particles or other foreign metallic particles may become embedded in or smeared on the surface of corrosion-resistant steel parts. These particles, if not removed, may appear as rust spots or establish a galvanic cell that could prove detrimental to the part. Passivation is a process by which metallic particles are removed and an impervious oxide film formed to improve the corrosion resistance of parts made from austenitic, ferritic, martensitic, and precipitation-hardened corrosion-resistant steel.

25.3 CLASSIFICATION OF TREATMENTS.

Type II	Medium temperature nitric acid solution with sodium dichromate additive
Type VI	Low temperature nitric acid solution
Type VII	Medium temperature nitric acid solution
Type VIII	Medium temperature, high concentration nitric acid solution

25.4 TREATMENT APPLICATION.

25.4.1 Type II shall be used on parts made of high carbon/high chromium grades (440 series), straight chromium grades with 12 – 14% chromium (martensitic 400 series), or for corrosion-resistant steels containing relatively large amounts (0.15%) of sulfur or selenium (303, 303Se, 347Se, 416, 416Se, 430F, 430FSe, and precipitation-hardenable steels).

25.4.2 Type VI and VII shall be used on austenitic 200 and 300 series chromium nickel and chromium grades with 17% chromium or greater (with the exception of the 440 series) corrosion-resistant steels.

25.4.3 Type VIII can be used for parts made from high carbon and high chromium grades (400 series) and precipitation-hardening stainless steels.

25.5 FINISH.

The passivated parts shall exhibit a clean surface and show no etching, pitting, or frosting. A slight discoloration will be allowed.

25.6 EQUIPMENT.

25.6.1 Tank Construction. Passivation tanks should be constructed of stainless steel.

25.6.2 Ventilation. The passivation tank shall be equipped with a positive ventilation system capable of meeting or exceeding the ventilation requirements of AFOSH STD 48-2.

Table 25-1. Passivation of Corrosion-Resistant Steels

Step	Operation	Time	Solutions, Materials, and Current	Temp °C	Temp °F
1	Vapor degrease. **WARNING** Solvent vapors are toxic. Avoid inhalation of vapors or contact with skin or clothing.	As Req'd	ASTM D4081 and ASTM D4376 (Tetrachloroethylene) Alternates:	120 – 124	248 – 256
			ASTM D4080 (Trichloroethylene) **NOTE** Not to be used where prohibited by state regulations.	88 – 90	187 – 194
2	Alkaline clean. **NOTE** • Corrosion-resistant steels with a surface hardness of Rockwell C 40 or above shall be cleaned by CP-1 or CP-2. • Ferrous metal parts may be cleaned in accordance with CP-1 or CP-2 to remove foreign materials from surface of parts provided the surface finish requirements can be maintained and no warpage of the part occurs.	5 – 15 min	C-206 Immersion Only Alternates:	65 – 99	150 – 210
			C-209 Immersion Only	65 – 99	150 – 210
3	Rinse.	As Req'd	Water	Rm – 82	Rm – 180
4	Passivate. Type II treatment.	20 min	C-461 Immersion Only	49 – 54	120 – 130
	Type VI treatment.	30 min	C-462 Immersion Only	21 – 32	70 – 90
	Type VII treatment.	20 min	C-322 Immersion Only	49 – 60	120 – 140
	Type VIII treatment.	30 min	C-311 Immersion Only	49 – 54	120 – 130
5	Rinse.	As Req'd	Water	21 – 93	70 – 200
6	Chromate treat all ferritic and martensitic parts.	30 min	C-466	60 – 71	140 – 160
7	Rinse.	As Req'd	Water	Rm – 82	Rm – 180

Table 25-1. Passivation of Corrosion-Resistant Steels - Continued

Step	Operation	Time	Solutions, Materials, and Current	Temp °C	Temp °F
8	Dry.	As Req'd	Shop Air	Room	Room

CHAPTER 26
SOLID FILM LUBRICANTS

26.1 PURPOSE.

This chapter provides instructions for applying solid film lubricants on bearing surfaces. Solid film lubricants used by the Air Force shall meet the requirements of one of the following current Specifications:

MIL-PRF-46010	Lubricant, Solid Film, Heat-Cured (Corrosion-Inhibiting)
MIL-L-23398	Lubricant, Solid Film, Air Drying
MIL-PRF-46147	Lubricant, Solid Film, Air-Cured (Corrosion-Inhibiting)
MIL-PRF-81329	Lubricant, Solid Film, Extreme Environment

Each of these specifications covers different uses, temperature, and environmental ranges; and care should be taken to select the best one to meet the hardware requirements.

26.2 GENERAL.

a. Solid film lubricants are used to lubricate bearing surfaces under operating conditions or in environments where the conventional lubricants are not satisfactory. They are used at high temperatures, 260°C (500°F); in vacuums, under dusty or dirty conditions, where conventional lubricants may contaminate parts, and in places where relubrication cannot be easily done. They serve as the primary lubricant in many sliding applications, as an antiseize coating for threaded parts and other assemblies which may not see movement for long periods of time. They also serve as anti-fretting coatings for closely mated parts subjected to vibrational movements.

b. Solid film lubricants are very much like paint in content and application. They are made by dispensing finely divided lubricant powders (pigments) into a resin binder. The lubricant powders are usually molybdenum disulfide, graphite, or other lamellar crystal structure materials which possess low friction and wear characteristics. The binders are thermally and oxidatively stable organic resins such as epoxy, phenolic, etc., which provide the bonding and adhesion to the bearing surface. The ratio of lubricant to binder in most formulations is approximately 2:1 or 3:1 by weight or volume. The lubricant-binder mixture is carried in a solvent to produce a thin paint-like consistency for ease of application. The resin usually dictates the choice of solvent but they are generally alcohol, toluene, xylene, etc., or mixtures of these. The formulations form a thin, permanently bonded, lubricating layer on the surfaces to which they are applied.

c. When properly applied, the finished coating has a smooth, dry appearance that is gray to black in color and cannot be easily removed. Some smudging may occur upon rubbing but only the loosely adhering top particles are displaced. The remaining thin film provides the lubrication for the relatively moving surfaces. The coating, when cured, is insoluble in solvents, lubricants, fuels, and fluids normally used in aircraft.

26.3 SURFACE PREPARATIONS.

Surfaces to which solid film lubricants are applied must be free of all traces of preservative coatings, oils, greases, and other contaminating films. Most organic contaminants can be removed with liberal application of solvents. Vapor degreasing with such agents as trichloroethylene is recommended. Parts may be wiped with solvents and rinsed well if vapor degreasing equipment is not available. After cleaning, smooth surfaces should be roughened by grit blasting to promote improved adhesion. Most materials can be treated by grit blasting with aluminum oxide (120 mesh grit) at 40 psi air pressure. A surface finish of 16 – 32 microinches RMS is desired to promote optimum adhesion and wear life. Parts should be thoroughly degreased after grit blasting to remove all traces of contaminants. Certain metals require different pretreatments prior to the application of the solid film lubricant. These pretreatments vary and the selected specification should be consulted for details. In general, however, aluminum and aluminum alloys are usually anodized per Specification MIL-A-8625; magnesium is given a dichromate coating per Specification SAE AMS-M-3171; titanium is coated with phosphate fluoride; cadmium or copper are to be bright dipped; under certain conditions zinc plated steel is given a phosphate or chromate coating; and carbon and alloy steel are given a phosphate coating per Specification MIL-DTL-16232 after grit blasting. After the surface has been prepared, inspect for cleanliness and uniform surface texture. Parts should be kept clean and dry until application of solid film lubricant.

26.4 COATING APPLICATION.

Solid film lubricants may be applied by spraying, brushing, or dipping. Best results are usually obtained by application with a spray gun. The lubricant should be thinned to a viscosity of 26 – 28 seconds with a No. 1 Zahn cup. Flat surfaces should be sprayed from 6 different angles in repeated light coats, allowing each coat to flash dry before the next applications. Care should be taken to obtain a film thickness of 0.0002 – 0.0005 inches after curing in order to maximize wear life. Masking, if necessary, may be done by using masking tape, jigs, corks, etc. Many times, intricate parts and complex surfaces are dipped to produce more uniform coatings. The solid film lubricant should be thinned to 28 – 31 seconds for the best dipping viscosity. The coatings should be applied as soon as possible after the surface preparation and coating application, the parts must be degreased and recleaned before applying the film to insure good adhesion. Solid film lubricants are not corrosion preventive coatings and all surfaces should be adequately treated prior to applying the lubricant coating.

26.5 CURING.

The air drying solid film formulations may be left to cure for the specified times in a clean, dry place. The heat cured films are baked in a circulating oven having an accurate temperature control for time and temperature. When fully cured the resin binder is polymerized which makes it insoluble to solvents as well as lowering the coefficient of friction. The full time and temperature specified in the specification should be followed closely to produce optimum adhesion and performance. Allowance should be made to insure all surfaces are at the prescribed temperature and time when a large number of parts are baked at one time. The parts should be allowed to cool slowly and be at, or near, room temperature before handling.

NOTE

Improved performance is obtained if both mating surfaces are coated where possible. When only one surface can be coated, the film should be applied to the larger and harder of the two surfaces. Improved performance of close tolerance parts can be obtained by burnishing the coated surface with a clean, dry, cotton cloth. The burnishing will produce a thin, shiny film and the loose wear debris should be removed with clean, dry air prior to assembly of the parts.

26.6 INSPECTION.

The bonded solid film lubricant shall appear uniform in color, smooth, and free from cracks, scratches, pinholes, blisters, bubbles, runs, sags, foreign matter, grit, rough particles, separation of ingredients, and other surface imperfections. The tape test specified in the specification shall be used to determine the adhesion of the film. Any parts that are defective must be completely stripped, cleaned, and recoated. Touch up of any area is not permitted.

26.7 QUALITY ASSURANCE.

The properties of these coatings are evaluated under the requirements of the various military specifications to which they are qualified. Adhesion, wear life, and resistance to fluids are some of the requirements which vary and must be met in the various specifications. The specifications under which the solid film lubricant is qualified should be checked for these details.

CHAPTER 27
STYLUS (BRUSH) PLATING

27.1 PURPOSE.

This chapter provides information and instructions on the use of stylus plating. All plating under this chapter shall conform to MIL-STD-865.

27.2 GENERAL.

a. The stylus plating process (sometimes called BRUSH PLATING) is a method of depositing metal from concentrated electrolyte solutions on selected areas without immersion tanks. In this process, metal is deposited from an electrolyte held in an absorbent material attached to an inert anode. Plating contact is made by brushing or swabbing the part (cathode) to be plated with the electrolyte-bearing anode. The deposition of various metals and alloys on various bases including ferrous alloys, aluminum alloys, copper alloys, nickel alloys, and corrosion-resistant steel, etc., is outlined in this chapter.

b. Stylus plating can be used effectively to perform the same functions as bath plating, e.g., corrosion protection, wear resistance, repair worn or damaged machine parts, etc. This method is utilized for any of the following reasons.

(1) To prevent or minimize disassembly costs.

(2) To minimize machining costs (plate to size).

(3) To minimize masking costs.

(4) To develop field capability.

(5) To plate areas of extremely large parts.

(6) To supplement conventional plating.

(7) To plate high strength steels.

(8) To plate onto difficult to plate metals, i.e., aluminum, molybdenum, titanium, etc., either as a bonding agent or for subsequent finishing.

(9) To restore worn, corroded, or overmachined parts back to size.

(10) To repair printed circuit boards.

27.3 PLATING APPLICATION.

Unless otherwise specified, the plating shall be applied after all basis metal heat treatments and mechanical operations such as machining, brazing, welding, forming, and perforating of the article have been completed except where the application is used to facilitate a subsequent operation. The basis metal shall be free from visible defects that will be detrimental to the appearance or protective value of the plating or intended use of the article.

27.4 UNDERPLATING.

Unless otherwise specified, the plating shall be deposited directly on the basis metal, except in cases where difficulty is experienced in depositing on the basis metal. In no cases shall any underplate be substituted for any part of the specified metal thickness.

27.5 PLATING.

The plating shall be smooth, fine-grained, adherent, continuous, and free from blisters, pits, nodules, indications of burning, excessive build-up, and other defects detrimental to the intended use of the article. Superficial staining or slight discoloration resulting from rinsing or baking operations will not be cause for rejection.

27.6 EQUIPMENT.

27.6.1 Power Unit. A suitable power source is required and shall operate on 110, 220, or 440 volts Alternating Current (AC), 60 hertz single phase or three phase input. The unit should be capable of producing direct current having smooth characteristics with controlled ripple (about 38%). The power unit must be able to output at least 25 amperes at 25 volts. Minimum instrumentation shall include a voltmeter, ammeter, ampherehour meter, variable DC output, and AC and DC circuit breakers. The requirements of MIL-STD-865 shall be met.

27.6.2 Ammeter. The ammeter shall have sufficient capacity to provide a full-scale reading equal to the maximum capacity of the power source and an accuracy of ±5% of the current being measured.

27.6.3 Voltmeter. The voltmeter shall have sufficient capacity to provide a full-scale reading equal to the maximum capacity of the power source and an accuracy of ±1.0 volt.

27.6.4 Amperehour Meter. The amperehour meter shall be readable to a division that is compatible with the power unit and application (i.e., 25 – 60 amperehour meter reads to 0.001 amperes; 100 – 150 amperehour meter reads to 0.01 amperes, etc) being measured. Accuracy should be 5% of the readable division of the meter being used.

27.6.5 Plating Tool Handles. The handles should be designed to hold anodes of various sizes and configurations. The handles should be designed for rapid cooling and should be insulated for safety reasons.

27.6.6 Dishes, Beakers, and Flasks. The dishes, beakers, and flasks required to hold the plating solutions and catch the runoff shall be inert to the solutions and of an appropriate configuration.

27.6.7 Accessory Equipment. Depending upon the type of work being done other items may be required such as: mechanical and electrical requirements are recommendations only.

a. Blasting Equipment – the size of the cabinet shall be adequate to enclose the part to be plated. Air lines shall be suitably trapped and filtered to prevent in-process contamination of the parts to be cleaned. The blast material shall be aluminum oxide (Al_2O_3) or silica (SiO_2). The material shall be of a particular size or grit that will not affect the micro dimensions of the part. (The blast material and blast procedure are subject to the approval of the responsible engineering organization).

b. Motorized Turning Head – the motorized turning head is used for rotating components such as shafts, bearings, etc., to assure concentric and uniform plating. The motorized turning head shall have a speed control from 0 – 600 RPM with an input of 110V, single phase, 60 hertz AC. The turning head shall also have an on-off-reverse control in either direction of rotation.

c. Rotary Power Anode – rotary power anodes are used to rotate the anode for the plating of internal diameters or to reduce operator fatigue on large areas. The rotary power anode shall have an input of 110 volts, single phase, 60 hertz AC current. A stepless speed control from 0 – 900 RPM and a reversing switch are also required.

27.7 MATERIALS.

27.7.1 Anodes. The removable anodes are available in a wide range of standard sizes and three basic shapes. They are as follows:

a. Cylindrical – for plating inside diameters

b. Concave – for outside diameters

c. Flat or block shaped – for flat shapes

d. Bulk blocks of graphite material are available for manufacturing special shapes

The anodes shall be of high purity dense graphite, platinum, platinum plated titanium, or 90% platinum and 10% iridium unless otherwise authorized by the responsible engineering organization. Separate anodes should be kept for use with each plating solution. Anodes that have been used for reverse current cleaning and etching operations should be marked for identification as such and should not be used with forward current.

27.7.2 Anode Coverings. The anode covering is used to hold and distribute the solution uniformly. The anode can be covered with any of the following materials:

a. Surgical Grade USP Long Fiber Sterile Cotton

b. Dacron Batting

c. Pellon

d. Scotchbright

e. Dacron Felt

f. Dalic Bonnet Materials; either Cotton (C) or Polyester (P)

27.7.3 Sleeving. When longer anode covering life is desired, surgical grade cotton, dacron, or cotton dacron sleeving can be used. Dalic bonnet material may also be used as sleeving material.

27.7.4 Solutions. The solutions used in stylus plating include solutions for cleaning, etching, and activating the surface to be plated, plating solutions for depositing pure or alloy coatings, stripping solutions, and special purpose solutions such as anodizing, chromate treatment, etc. Brooktron solutions can be obtained from Brooktronics Engineering Corporation, North Hollywood, California. Dalic solutions can be obtained from SIFCO Metachemical, Cleveland, Ohio, or Piddington and Associated Ltd, Monrovia, California. Selectron solutions can be obtained from Selectrons Ltd, New York, New York or from Vanguard Pacific Inc, Santa Monica or Redwood City, California. Solutions of any manufacturer may be used provided they meet the applicable plating specification and are qualified by procedure tests. However, plating and preparatory solutions of different manufactures should not be intermixed or substituted into a plating procedure.

27.8 SOLUTION CHARACTERISTICS.

a. The solution manufacturers have prepared and made available comprehensive literature on their solutions. This information should be reviewed when selecting a solution and the instructions followed when using the solution. The solution containers are labeled as to range of voltage for various anodes and solution factor. Alkaline and neutral solutions are preferred on porous base metals, white metals, high strength steel, and for improved throwing ability. Acid solutions are generally used for rapid build-up and as laminating structure material in conjunction with alkaline type solutions.

b. Selective plating generally is limited in the thickness that can be deposited in one pass because of stress cracking and roughness of the deposit. As a general rule, that maximum thickness for one pass of a soft metal (cadmium, copper, etc.), is 0.005 inch and a hard metal (nickel, cobalt, etc.), is 0.0005 inch. The manufacturers of stylus plating solutions have developed several solutions specifically for heavy build-up. By supplying these solutions at a constant flow rate and the use of treated ultrafine SCOTCH BRITE it is possible to deposit layers of metal such as nickel in excess of 0.030 inch without layering or sandwiching. These solutions should be given first consideration when heavy build-up is required. Another method of obtaining heavy build-up is by laminating. Laminating is virtually a thing of the past, since the advent of the new generation of heavy build-up solutions. A laminate is made by alternating layers of hard or soft metal. Grain growth is in horizontal layers from soft metal and vertical layers in hard metal. Thus, alternating layers of hard and soft dissipate or eliminate stress much the same as the theory behind plywood.

c. Controlling Thickness – measuring the amperehours during plating is the most common method used for controlling the plating thickness during stylus plating. However, the computed amperehour figure only measures the amount of metal deposited, the distribution of which will depend on uniform contact time on all areas being plated.

27.9 CALCULATING AMPEREHOURS.

a. Each stylus plating solution has a solution factor which is equal to the amperehours required to deposit 0.0001 inch on 1 square inch of surface.

b. Multiply this figure by the number of square inches to be plated. This gives the amperehours required to deposit 0.0001 inch on the area to be plated.

c. Multiply the figure calculated in Step b by the multiples of 0.0001 to be deposited. The result if the required amperehours, i.e., plate 2 square inches with a solution factor of 0.020 to a thickness of 0.001 inch (2 x 0.020 x 10) = 0.4 amperehours.

27.10 PRIOR PREPARATION.

Stylus plating solutions are not designed to remove large amounts of grease, oil, oxides, and scale. Mechanical methods should be used to remove large amounts of scale or oxides. Solvents should be used to remove large amounts of grease or oil.

Table 27-1. Stylus Plating on Aluminum

Step	Operation
1	Electroclean using forward current until water does not break on the surface.
2	Rinse thoroughly with clean tap water.
3	Activate with reverse current until a uniform gray to black surface is obtained. DO NOT over activate.
4	Rinse thoroughly with clean tap water.
5	Immediately electroplate to color with a preplate nickel.
6	Rinse thoroughly with clean tap water.
7	Continue plating with the desired metal to the proper thickness.
8	Rinse and dry.
NOTE Certain aluminum alloys will exhibit improved adhesion if the following steps are added between Steps 4 and 5.	
4a	Activate with forward current until a uniform light surface is obtained. This is not the same activator as in Step 3.
4b	Rinse thoroughly in clean tap water.

Table 27-2. Stylus Plating on Copper and Copper Base Alloys

Step	Operation
1	Electroclean using forward current until water does not break on the surface.
2	Rinse thoroughly in clean tap water.
3	Electroplate to the desired thickness.
4	Rinse and dry.
NOTE Adhesion can be improved on certain parts by adding the following steps between Steps 2 and 3.	
2a	Etch with reverse current until a clean copper colored surface is obtained.
2b	Rinse thoroughly in clean tap water.

Table 27-3. Stylus Plating on 300 Series and 400 Series Stainless Steels, Nickel Base Alloys, Chromium Base Alloys, High Nickel Ferrous Alloys, Cobalt Base Alloys, Nickel Plate, and Chromate Plate

Step	Operation
1	Electroclean using forward current until water does not break on the surface.
2	Rinse thoroughly in clean tap water.
3	Reverse current etch with the appropriate solution for the base material until a uniformly etched surface is obtained.
4	Rinse thoroughly in clean tap water.
5	Activate the surface using forward current and the appropriate solution for the base material.
6	DO NOT rinse. Immediately nickel flash the surface with one of the preplate nickels.
7	Rinse thoroughly in clean tap water.
8	Continue plating with the desired metal to the proper thickness.
9	Rinse and dry.

Table 27-4. Stylus Plating on Iron and Carbon Steels (Not for Steel Heat Treated Above 180,000 psi)

Step	Operation
1	Electroclean using forward current until water does not break on the surface.
2	Rinse thoroughly in cold tap water.
3	Reverse current etch with the appropriate activating solution until a uniform gray smut is obtained.
4	Rinse thoroughly in cold tap water.
5	Reverse current activate with the appropriate activating solution until smut is removed.
6	Rinse thoroughly in cold tap water.
7	Electroplate the part with the desired metal. If copper or silver is the desired metal, an undercoat is required.
8	Rinse and dry.

Table 27-5. Stylus Plating on Ultra High Strength Steels (Steels Heat Treated to 180,000 psi and Above)

Step	Operation
1	Electroclean using reverse current until water does not break on the surface.
2	Rinse thoroughly in clean tap water.
3	Electroplate the part with the desired metal. If copper or silver is the desired metal, an undercoat is required. Plate initially at the highest voltage recommended for the solution so as to develop an initial barrier layer. Then reduce to standard voltage.
4	Rinse and dry.
5	Bake the parts for 4 hours at 375 ± 25°F within 4 hours of plating.

NOTE

- Parts plated with Dalic Cadmium Code 2022, Dalic Cadmium Code 2023 NO BAKE or Selectron Cadmium LHE SPS 5070 will not require a post plate bake.
- Acid etching should be avoided, if possible. Where etching is absolutely necessary it should be done with reverse current.

CHAPTER 28
TROUBLESHOOTING

28.1 In the best controlled processes, defective plating will occasionally be the result of a variable that is not or cannot be controlled or foreseen. When trouble occurs, it is necessary to locate its source and take corrective action as quickly as possible, thereby reducing further production losses. These losses can be minimized by having an experienced individual continually observing the appearance of work during preparation and after plating to detect any irregularities that may lead to production stoppages. Any nonuniformity of surface appearance should be viewed with concern and the cause should be immediately investigated to determine the seriousness of the problem and if work should be diverted to other tanks.

The first step in troubleshooting is to carefully observe the condition of the work after each step as it passes through the preparatory operations. If the work exhibits any indication of irregular color, etching, smut, stains, or water breaks, that step should be scrutinized. If all steps appear normal, the search should be turned to the appearance of the solutions, the complete solution analysis of all solutions involved, and a Hull cell test of the plating bath. Operating conditions of the solution should be checked and investigate what additions have been made to the solution prior to the first indication of trouble.

28.2 The troubleshooting chart lists the more common problems which may occur in plating processes, their probable cause, and possible correction.

Table 28-1. Troubleshooting Chart

Trouble	Probable Cause	Possible Correction
Contaminated solution	Suspended particles of dust, dirt, metallic impurities, oil	1. Filter solution. 2. Purify by low current density electrolysis. 3. Remove oil by skimming or absorbent tissues.
	Metallic contamination	1. Purify by low current density electrolysis. 2. Search bottom of tank for parts, etc. 3. Prepare new solution.
	Defective rack coatings	1. Replace coating. 2. Replace racks with materials that need no coatings.
	Organic contamination	1. Chemical treat solution with charcoal. 2. Prepare new solution. 3. Don’t use brighteners.
	Contaminants dragged in on work	1. Do not allow work to dry between process steps. 2. Rinse thoroughly before introducing work into solutions. 3. Replace defective rack coatings.
	Impure chemicals	1. Prepare and maintain solutions with good purity chemicals.
	Addition of wrong chemicals	1. Purify solution. 2. Prepare new solution.
Poor adhesion	Old plating not removed	1. Completely strip old deposit.
	Basis metals too porous	1. Apply strike coating before final deposit. 2. Change basis metal if possible. 3. Apply alternate coating procedure. 4. Reject parts not suitable for plating.
	New solution	1. Purify solution. 2. BREAK IN solution using low current density electrolysis.

Table 28-1. Troubleshooting Chart - Continued

Trouble	Probable Cause	Possible Correction
	Faulty bond between preliminary and subsequent coatings	1. Decrease time between process steps. 2. Keep work wet between coatings. 3. Reactivate preliminary coated surface.
	Faulty bond between basis metal and deposit	1. Purify solution. 2. Determine if basis metal requires a strike coating. 3. Keep work wet during preparatory steps. 4. Check preparatory procedures. 5. Check electrical circuit.
Nonuniformity of appearance	Bath chemicals out of balance	1. Analyze solution and adjust ingredients.
	Solution contamination	1. Purify solution by chemical treatment or low current density electrolysis. 2. Filter solution. 3. Prepare new solution.
	Thin deposit	1. Apply a heavy deposit to determine if problem is eliminated. 2. Check electrical circuits. 3. Clean electrical contacts. 4. Increase current density.
	Insufficient cleaning or etching	1. Adjust bath ingredients. 2. Check electrical circuits. 3. Do not allow parts to dry in between preparatory steps. 4. Rinse thoroughly between process steps.
	Smut on work	1. Check preparatory procedure. 2. Eliminate current on etch step.
Burn deposits	Bath chemicals out of balance	1. Analyze solution and adjust ingredients.
	Current density too high	1. Check calculated current density. 2. Check electrical circuit. 3. Anodes too close to work. 4. Excessive anode area available.
	Bath temperature too low	1. Adjust solution temperature.
	Large parts too cold when plating began	1. Allow parts to warm before application of total current.
	Interrupted current during plating	1. Check electrical contacts. 2. Check electrical circuit.
	Anodes too close to work	1. Reposition anodes.
Spotty deposits	Entrapment of processing solutions in basis metal	1. Check porosity of basis metal and reject parts unsuitable for plating. 2. Determine if a strike coating is necessary. 3. Rinse thoroughly between processing steps.
	Oil on surface of solution	1. Remove oil by skimming or with absorbent tissues. 2. Prepare new solution.
	Insufficient cleaning or etching	1. Adjust bath ingredients. 2. Review cleaning procedure. 3. Rinse thoroughly between process steps. 4. Do not allow work to dry between preparatory steps.
	Smut on work surface	1. Check cleaning procedure. 2. Eliminate current on etch step.

Table 28-1. Troubleshooting Chart - Continued

Trouble	Probable Cause	Possible Correction
	Bath chemicals out of balance	1. Analyze solution and adjust ingredients.
	Current density too low	1. Check calculated current and density. 2. Reposition thieves. 3. Check electrical circuit. 4. Clean electrical contacts. 5. Reposition anodes. 6. Increase anode area. 7. Material used for holding fixture may be too resistant to transfer current.
	Interrupted current during plating	1. Check electrical circuit. 2. Clean electrical contacts. 3. Check electrical connections.
Roughness	Metal content too low	1. Analyze solution and adjust ingredients.
	Ratio of metal to cyanide out of range.	1. Analyze solution and adjust ingredients.
	Improper cleaning or etching	1. Check preparatory procedure. 2. Check chemical concentrations. 3. Excessive time between process steps. 4. Rinse thoroughly between process steps.
	Solution contaminated with suspended particles	1. Filter solution. 2. Purify solution. 3. Prepare new solution.
	Bath temperature out of range	1. Adjust temperature.
	Current density too high	1. Check calculated current density. 2. Anodes too close to work. 3. Too much anode area. 4. Check electrical circuit.
	Impurities in anodes	1. Bag anodes. 2. Use better quality anodes.
	Sodium carbonate concentration too high	1. Remove part of solution. 2. FREEZE OUT carbonates.
	Rough basis metal	1. Reject parts unsuitable for plating. 2. Check etch procedure.
	Chromic acid content too high	1. Analyze solution and adjust ingredients.
	Leaky filters	1. Repack filter to eliminate voids on filter bag. 2. Change filter tubes. 3. Check flow direction of solution through filter.
	Anode bag faulty	1. Replace anode bag. 2. Change bag material if necessary.
	Overplating	1. Reduce thickness of deposit.
Poor coverage	Bath chemicals out of balance	1. Analyze solution and adjust ingredients.
	Bath temperature out of range	1. Adjust bath temperature.

Table 28-1. Troubleshooting Chart - Continued

Trouble	Probable Cause	Possible Correction
	Current density too low	1. Recalculate current density. 2. Check electrical circuits. 3. Clean electrical contacts. 4. Determine if rack material is too resistant to allow current transfer. 5. Check thieves. 6. Anode not close enough to cathode.
	Passive or scaled anodes	1. Clean anodes. 2. Check electrical contacts. 3. Readjust anode area.
	Gas entrapment prevents solution from reaching area	1. Reposition work. 2. Use solution agitation.
	Cleaners dried on work	1. Do not let work dry between preparatory steps. 2. Rinse work thoroughly between each process step.
Pitting	Basis metal	1. Check basis metal and reject part unsuitable for plating.
	Solution contamination	1. Check for iron contamination. 2. Filter solution. 3. Purify chemically or by low current electrolysis. 4. Prepare new solution.
	Improper cleaning or etching	1. Check cleaning procedure. 2. Don't allow parts to dry between preparatory steps. 3. Check chemical concentrations.
	Metal content too low	1. Analyze solution and adjust ingredients.
	Excessive etching during preparation	1. Check preparation procedure.
	Smut on work surface	1. Check preparation procedure. 2. Eliminate current on etch step.
	Gas bubbles on work surface	1. Use solution agitation. 2. Add wetting agents to bath.
	Work magnetized	1. Demagnetize part.
	Boric acid content too high	1. Remove a portion of solution and dilute to usable limits.
Low cathode efficiency	Low metal content	1. Analyze solution and adjust ingredients.
	High cyanide content	1. Analyze solution and adjust ingredients. 2. Dilute solution and adjust ingredients.
	High concentration of metallic impurities	1. Filter solution. 2. Purify bath by low current electrolysis. 3. Prepare new solution.
	Current density too low	1. Clean electrical contacts. 2. Recalculate current density. 3. Check electrical circuit. 4. Rack material may resist current transfer. 5. Thieves need adjusting. 6. Anode area insufficient. 7. Anodes too far from work. 8. Current leakage.

Table 28-1. Troubleshooting Chart - Continued

Trouble	Probable Cause	Possible Correction
	Passive or scaled anodes	1. Clean anodes. 2. Check electrical contacts. 3. Adjust anode to cathode ratio.
	Bath temperature too low	1. Adjust temperature.
	Ratio of chromic acid to total catalyst high	1. Analyze solution and adjust ingredients.

CHAPTER 29
SOLUTION PREPARATION AND MAINTENANCE

29.1 SOLUTION CONTROL.

WARNING

Nearly all solutions utilized in stripping, preparation, and plating operations are in some way harmful to the individual. Many solutions are highly corrosive while many of the components in them possess an accumulation characteristic which surfaces after repeated exposure over a considerable period of time. This may be evidenced in the form of nausea, respiratory infection, skin rashes, etc. after only slight additional exposures to the offensive substances. Therefore, every precaution must be taken to minimize the exposure of personnel who come in contact with these solutions. Protective equipment such as aprons, boots, gloves, goggles, respirators, etc. must be worn where necessary. Adequate and continuous ventilation must be provided.

29.2 GENERAL.

a. Chemical solutions used for surface preparation, treatment, and deposition of metal must be carefully controlled to obtain quality end items. The following information provides instructions for the preparation, analysis, and maintenance of those solutions contained in this manual.

b. Testing frequency as specified is to serve as a guide and is not mandatory. The actual analysis schedule should be established by the laboratory supervisor and/or project engineer, taking into consideration the volume of solution, general workload, and history of the solution. In any event, testing is to be frequent enough to ensure that process solutions are maintained within control limits and near optimum conditions.

c. Sample sizes, solution normalities, and standard solutions are recommended for solution analysis but may be adjusted to fit the requirements of each laboratory. If sample sizes or standard solutions are changed, the factors used in calculations must be adjusted to reflect such changes.

d. Temperature on most alkaline cleaning solutions is specified from 52° – 57°C (125° – 135°F). This is done to prevent damage to materials used as maskouts. If however, maskout materials are unnecessary, temperature may be elevated to a maximum of 93°C (200°F).

e. Test methods specified in this manual are recommended procedures, however there are other test methods that produce satisfactory results for a given constituent. Therefore alternate test methods may be used provided they are procedures recognized by the chemical industry.

f. The solutions in Table 29-1 and Table 29-2 are given as a guide and are not the only authorized products. They may be replaced by proprietary products which are known to do the same job.

29.3 SOLUTION CONTROL SCHEDULE.

Table 29-1. Solution Control

Solution Number	Name	Constituent	Test Frequency	Test Method
C-101	Brass, Bronze, Silver, and Gold Strip	Sodium Cyanide Sodium Hydroxide	Weekly Weekly	6
C-102	Cadmium and Titanium-Cadmium Strip	Ammonium Nitrate	—	—
C-103	Alkaline Chromium Strip	Sodium Hydroxide M-623	Weekly Weekly	7
C-104	Acid Chromium Strip	Hydrochloric Acid Rodine 50	Weekly Weekly	1
C-105	Chromium Strip	Phosphoric Acid	Weekly	1
C-106	Multideposit Strip	Nitro Benzene Sulfonate	—	—

Table 29-1. Solution Control - Continued

Solution Number	Name	Constituent	Test Frequency	Test Method
		Sodium Cyanide Sodium Hydroxide	Twice Weekly Twice Weekly	8 18
C-107	Silver Strip	Sodium Hydroxide Trisodium Phosphate Sodium Cyanide	Weekly Weekly Weekly	33 33 33
C-108	Nitric Acid Strip	Nitric Acid	Weekly	1
C-109	Tin Strip	Sodium Hydroxide	Weekly	7
C-110	Neutralizer	Sodium Hydroxide	Weekly	7
C-111	Zinc Strip	Hydrochloric Acid Antimony Trioxide	Weekly —	1
C-112	Lead Strip	Acetic Acid Hydrogen Peroxide	— —	— —
C-113	Lead Strip	m-Nitro Benzene Sulfonate Sodium Hydroxide	— —	— —
C-114	Rhodium Strip	Hydrochloric Acid Rodine 50	Weekly —	1 —
C-115	Indium or Lead Strip	Sodium Perborate Acetic Acid	— —	— —
C-116	Anodize Strip	Chromic Acid Phosphoric Acid		
C-117	Nitric-Sulfuric Acid Strip	Sulfuric Acid Nitric Acid	Weekly Weekly	1-3
C-118	Sulfuric Acid Strip	Sulfuric Acid	Weekly	1
C-119	Hydrochloric Acid Strip	Hydrochloric Acid Antimony Trioxide	Weekly	1
C-120	Nitric Acid Strip	Nitric Acid	Weekly	1
C-121	Sulfuric Acid Strip	Sulfuric Acid	Weekly	1
C-122	Nitric Acid 10%	Nitric Acid	Weekly	1
C-123	Aluminum Alloy Electropolishing	Sulfuric Acid Hydrofluoric Acid	Weekly Weekly	3
C-124	Aluminum Alloy Electropolishing	Nitric Acid Sulfuric Acid Phosphoric Acid		
C-125	Ferrous Alloy Electropolishing	Hydrochloric Acid	Weekly	1
C-126	Copper Alloy Electropolishing	Chromic Acid Sodium Dichromate Acetic Acid Sulfuric Acid		
C-127	Sulfuric Acid 70%	Sulfuric Acid	Weekly	1
C-128	Sulfuric-Phosphoric Acid	Sulfuric Acid Phosphoric Acid	Weekly Weekly	1
C-129	Phosphoric Acid 75 – 100%	Phosphoric Acid	Weekly	1
C-130	Sulfuric-Phosphoric Acid (15 and 63%)	Sulfuric Acid Phosphoric Acid	Weekly Weekly	1

Table 29-1. Solution Control - Continued

Solution Number	Name	Constituent	Test Frequency	Test Method
C-131	Aluminum Alloy Electropolishing	Sodium hydroxide Trisodium Phosphate	Weekly Weekly	32
C-132	Carbon Steel Electropolishing	Sulfuric Acid Phosphoric Acid Chromic Acid		
C-133	Copper Alloy Electropolishing	Arsenic Acid Phosphoric Acid Chromic Acid		
C-134	Chromic Acid Pickle	Chromic Acid	Weekly	46
C-135	Hydrofluoric Acid (60%)	Hydrofluoric Acid	Weekly	1
C-136	Acid Fluoride	Acidity	Weekly	41
C-137	Anodize Strip	Chromic Acid Phosphoric Acid	Weekly	11-1.1 55
C-138	Hydrochloric Acid	Hydrochloric Acid	Weekly	1
C-139	Copper Strip	Chromic Acid Sulfuric Acid	Weekly Weekly	11-1 11-2
C-140	Chromium Strip	Chromic Acid	Weekly	11-1
C-201	Alkaline Cleaner	Sodium Hydroxide Trisodium Phosphate Sodium Metasilicate	Weekly Weekly Weekly	31
C-202	Alkaline Cleaner for Aluminium	Sodium Hydroxide Trisodium Phosphate Sodium Metasilicate	Weekly Weekly Weekly	31
C-203	Alkaline Cleaner	Sodium Hydroxide Trisodium Phosphate	Weekly Weekly	30
C-204	Alkaline Cleaner	Sodium Hydroxide Sodium Cyanide	Weekly Weekly	15
C-205	Alkaline Cleaner for Aluminum	Trisodium Phosphate Sodium Carbonate	Weekly Weekly	32
C-206	Alkaline Cleaner (A-A-59260)	Alkalinity	Weekly	37
C-207	Sodium Hydroxide	Sodium Hydroxide	Weekly	37
C-208	Alkaline Cleaner (SAE AMS 1547)	Alkalinity	Weekly	15-2
C-209	Alkaline Cleaner	Sodium Hydroxide Trisodium Phosphate	Weekly Weekly	30
C-210	Alkaline Cleaner	Sodium Hydroxide Trisodium Phosphate Sodium Carbonate	Weekly Weekly Weekly	51
C-211	Magnesium Alloy Etchant	Potassium Hydroxide	Weekly	57-1
C-301	Hydrochloric Acid Etch	Hydrochloric Acid (15%)	Weekly	1
C-302	Hydrochloric Acid Etch	Hydrochloric Acid (50%)	Weekly	1
C-303	Hydrochloric Acid Etch	Hydrochloric Acid (30%)	Weekly	1
C-304	Sulfuric Acid Etch	Sulfuric Acid 40%	Weekly	1
C-305	Chromic Acid	Chromium Trioxide	Weekly	2 or 11

Table 29-1. Solution Control - Continued

Solution Number	Name	Constituent	Test Frequency	Test Method
C-306	Sulfuric Hydrofluoric Acid Etch	Sulfuric Acid 25% Hydrofluoric Acid 5%	Weekly Weekly	3
C-307	Nitric Hydrofluoric Acid Etch	Nitric Acid 35% Hydrofluoric Acid 3%		4
C-308	Dry Acid Salts	Acid Salts 120 g/L	Weekly	5
C-309	Dry Acid Salts	Acid Salts 300 g/L	Weekly	5
C-310	Nitric Hydrofluoric Acid Etch	Nitric Acid 70% Hydrofluoric Acid 10%	Weekly	4
C-311	Nitric Acid Etch	Nitric Acid 50%	Weekly	1
C-312	Sulfuric Acid Etch	Sulfuric Acid 20%	Weekly	1
C-313	Hydrochloric Acid Etch	Hydrochloric 2 – 4%	Weekly	1
C-314	Fluoboric Acid Etch	Fluoboric Acid 2 – 4%	Weekly	1
C-315	Sulfuric Acid Etch	Sulfuric Acid 10%	Weekly	1
C-316	Nitric-Sulfuric-Actane 70	Nitric Acid Sulfuric Acid Actane 70	Weekly	1
C-317	Aluminum Alloy Etchant	Sodium Hydroxide Dissolved Aluminum	Daily Twice Weekly	38
C-318	Ferrous Alloy Etchant	Free Acid Phosphate Iron Nitrate	Daily Daily Daily Daily	39
C-319	Deoxidizer (Desmutter)	Chromic Acid	Weekly	2
C-320	Titanium Alloy Etchant	Hydrofluoric Acid Free Acid Nitrate Titanium	Daily Daily Daily Daily	40
C-321	Aluminum Alloy Etchant	Sodium Hydroxide Dissolved Aluminum	Daily Twice Weekly	38
C-322	Nitric Acid	Nitric Acid 25%	Weekly	1
C-323	Desmutter	SC-590 Sulfuric Acid	Daily Daily	50
C-324	Deoxidizer	Sodium Dichromate Sulfuric Acid		
C-325	Deoxidizer	Diversey 514	Weekly	
C-326	Sulfuric Acid Ammonium Bifluoride Etchant	Sulfuric Acid 25% Ammonium Bifluoride 4 – 6%	Weekly Weekly	56 56
C-327	Non-Chromated Desmutter	Isoprep 184	Weekly	58
C-401	Brass Plating Sol (Reg)	Copper Metal Zinc Metal Free Cyanide Sodium Carbonate	Weekly Weekly Weekly Weekly	9

Table 29-1. Solution Control - Continued

Solution Number	Name	Constituent	Test Frequency	Test Method
C-402	Brass Plating Sol (Hi-Speed)	Copper Metal Zinc Metal Free Cyanide Sodium Carbonate Sodium Hydroxide pH	Weekly Weekly Weekly Weekly Weekly Weekly	9 18
C-403	Nickel Strike	Nickel Metal Hydrochloric Acid	Weekly Weekly	13
C-404	Bronze Plating	Copper Metal Stannous Metal Free Alkali Rochelle Salts Free Potassium Cyanide	Weekly Weekly Weekly Monthly Weekly	9
C-405	Cadmium Plating	Cadmium Metal Total Sodium Cyanide Sodium Hydroxide Sodium Carbonate Ratio Thickness Adhesion Corrosion Resistance Embrittlement *	Weekly Weekly Monthly Monthly Weekly Monthly Monthly Monthly Monthly	10
C-406	Cadmium Bright Dip	Chromic Acid	Weekly	14
C-407, C-408, and C-409	Chromium Plating	Chromic Acid Sulfate Ratio Trivalent Chromium Thickness Adhesion Embrittlement-Relief * Iron Chlorides	Weekly Weekly Weekly Every 6 months Monthly Monthly Monthly Every 6 months Every 6 months	11
C-410	Zincate	Density	Weekly	17
C-411	Copper Strike	Copper Metal Free Sodium Cyanide Sodium Hydroxide Sodium Carbonate	Weekly Weekly Monthly Monthly	16
C-412	Nickel Plating (Soft Low Stress Deposit)	Nickel Metal Boric Acid Chloride Surface Tension pH Stress Thickness Adhesion Embrittlement-Relief *	Weekly Weekly Weekly Twice Weekly Weekly Monthly Monthly Monthly Monthly	29 18 29

Table 29-1. Solution Control - Continued

Solution Number	Name	Constituent	Test Frequency	Test Method
C-413	Neutralizer	Alkalinity	Monthly	20
C-414	Nickel Plating (Hard Compressive Stress Deposit)	Nickel Metal	Weekly	29
		Boric Acid	Monthly	
		Chloride	Weekly	
		Surface Tension	Twice Weekly	
		Stress	Monthly	
		pH	Weekly	18
		Thickness	Monthly	29
		Adhesion	Monthly	
		Embrittlement-Relief *	Monthly	
C-415	Copper Plating	Copper Metal	Weekly	16
		Free Sodium Cyanide	Weekly	
		Sodium Hydroxide	Weekly	
		Sodium Carbonate	Monthly	
		Rochelle Salts	Monthly	
C-416	Acid Copper P1ating	Copper Metal	Weekly	34
		Sulfuric Acid	Weekly	
C-417	Silver Strike	Silver Metal	Weekly	19
		Free Potassium Cyanide	Weekly	
		Potassium Carbonate	Monthly	
C-418	Silver Plating	Silver Metal	Weekly	19
		Free Potassium Cyanide	Weekly	
		Potassium Carbonate	Monthly	
		Potassium Hydroxide	Monthly	
		Thickness	Monthly	
		Adhesion	Monthly	
		Embrittlement-Relief *	Monthly	
C-419	Silver Plating (Hi-Speed)	Silver Metal	Weekly	19
		Free Potassium Cyanide	Weekly	
		Potassium Carbonate	Monthly	
		Potassium Hydroxide	Monthly	
		Thickness	Monthly	
		Adhesion	Monthly	
		Embrittlement-Relief *	Monthly	
C-420	Tin Plating	Sodium Stannate	Weekly	21
		Sodium Hydroxide	Weekly	
		Thickness	Monthly	
		Adhesion	Monthly	
		Corrosion Resistance	Monthly	
C-421	Nickel Plating (Watts)	Nickel Metal	Weekly	29
		Boric Acid	Monthly	
		Chloride	Weekly	
		pH	Weekly	18
		Surface Tension	Twice Weekly	29
		Thickness	Monthly	
		Adhesion	Monthly	
		Embrittlement-Relief *	Monthly	
		Stress	Monthly	

Table 29-1. Solution Control - Continued

Solution Number	Name	Constituent	Test Frequency	Test Method
C-422	Rust Retardant	Chromate		
C-423	Cyanide Dip	Free Cyanide	Weekly	22
C-424	Zinc Plating	Zinc Metal Total Sodium Cyanide Sodium Hydroxide Sodium Carbonate Thickness Adhesion Corrosion Resistance Embrittlement-Relief *	Every 2 Weeks Every 2 Weeks Every 2 Weeks Every 6 Months Monthly Monthly Monthly Monthly	25
C-425	Lead Fluoborate Plating	Lead Metal Free Fluoboric Acid pH Thickness Adhesion Corrosion Resistance	Every 2 Weeks Every 2 Weeks Every 2 Weeks Monthly Monthly Monthly	23 18 23
C-426	Lead-Tin-Antimony Plating	Lead Metal Stannous Metal Antimony Metal F1uoboric Acid	Twice Weekly Twice Weekly Twice Weekly Twice Weekly	24
C-427	Gold Plating	Gold Metal Free Potassium Cyanide Potassium Carbonate pH Thickness Adhesion Embrittlement-Relief *	Every 2 Weeks Every 2 Weeks Every 2 Weeks Every 2 Weeks Monthly Monthly Monthly	26 18 26
C-428	Rhodium Plating	Rhodium Metal Sulfuric Acid Thickness Adhesion Embrittlement-Relief *	Every 2 Weeks Every 2 Weeks Monthly Monthly Monthly	27
C-429	Indium Plating	Indium Metal Sodium Sulfate pH		28 18
C-430	Electroless Nickel			

Table 29-1. Solution Control - Continued

Solution Number	Name	Constituent	Test Frequency	Test Method
C-431	Titanium Cadmium (Delta)	Cadmium Oxide Titanium Metal Total Sodium Cyanide Sodium Hydroxide Sodium Carbonate Iron	Weekly Every 8 hrs of operation Weekly Weekly Monthly Quarterly	12
C-433	Copper Fluoborate Plating	Copper Metal pH	Weekly Weekly	16 18
C-434				
C-435	Conversion Coat	Chromic Acid	Every 2 Weeks	36
C-436	Phosphate Conversion Coating	Phosphoric Acid	Every 2 Weeks	1
C-437	Black Oxide	Temperature Smut Oxalic Spot Test	Weekly Weekly Weekly	49
C-438	Black Oxide (MIL-C-46110)	Alkalinity	Weekly	20
C-439	Chromic Acid Dip	pH	Weekly	18
C-440	Tin Fluoborate Plating	Metallic Tin Fluoboric Acid Thickness Adhesion Corrosion Resistance	Weekly Weekly Monthly Monthly Monthly	35 35 21 21 21
C-441	Chromic Acid Anodize	Chromic Acid Aluminum Chlorides Trivalent Chromium	Weekly Weekly Monthly Monthly	42
C-442	Anodize Seal	Nickel Acetate pH	 Weekly	 18
C-443	Anodize Seal	Sodium Dichromate	Weekly	45
C-444	Sulfuric Acid Anodize	Sulfuric Acid Aluminum	Weekly Monthly	43
C-445	Hard Anodize	Sulfuric Acid Oxalic Acid	Weekly	44
C-446	Conversion Coat	Chromic Acid pH	Weekly Weekly	14 18
C-447	Phosphoric Acid Anodize	Phosphoric Acid	Weekly	1
C-448	Chrome Pickle Treatment	Sodium Dichromate Nitric Acid	Weekly Weekly	45
C-449	Dichromate Treatment	Sodium Dichromate	Weekly	45
C-450	Galvanic Anodize	Sodium Dichromate Ammonium Sulfate	Weekly	45
C-451	Caustic Anodize	Sodium Hydroxide	Weekly	37
C-452	Neutralizer	Sodium Dichromate Sodium Bifluoride	Bi-Weekly	45
C-453	Chromic Acid Treatment	Chromic Acid	Weekly	46
C-454	Fluoride Anodize	Ammonium Bifluoride	Weekly	

Table 29-1. Solution Control - Continued

Solution Number	Name	Constituent	Test Frequency	Test Method
C-455	Chromate Treatment	Iridite #15 Hydrochloric Acid	Weekly Weekly	47
C-456	Chrome Pickle	Sodium Dichromate Nitric Acid Bifluoride	Weekly	45
C-457	Blackener for Copper Alloy	Potassium Sulfide	—	—
C-458	Blackener for Stainless Steel	Sodium Dichromate	—	—
C-459	Manganese Phosphate	Concentration Salt Spray Weight	Daily Weekly Weekly	48
C-460	Zinc Phosphate	Concentration Salt Spray Weight	Daily Weekly Weekly	48
C-461	Passivation for stainless steel Type II	Nitric Acid Sodium dichromate	—	—
C-462	Passivation for stainless steel Type VI	Nitric Acid	Weekly	1
C-463	Zincate	Sodium Hydroxide Zinc oxide Ferric chloride Rochelle Salts Sodium nitrate	Density wkly	17
C-464	Hard Anodize	Sulfuric Acid Oxalid Acid	Weekly	44
C-465	Tin Plating	Potassium Stannate Potassium Hydroxide Thickness Adhesion Corrosion Resistance	Weekly Weekly Monthly Monthly Monthly	52 52 21 21 21
C-466	Passivation for ferritic and Martinsitic steel	Sodium dichromate	Weekly	45
C-467	Nickel Sulfamate strike	Nickel metal Boric acid hydrochloric acid pH	Weekly Weekly Weekly Weekly	29 54 54 18
C-468	Rochelle Salt Solution	Rochelle Salt	Bi-monthly	
C-469	Copper Sulfate Strike Solution	Copper Sulfate Sodium Hydroxide Rochelle Salt	Weekly Weekly Bi-monthly	16 37
C-470	Titanium Anodizing Solution	Trisodium Phosphate Phosphoric Acid Ammonium Hydroxide Distilled or Deionized Water Chloride	Weekly Weekly Weekly Weekly	
C-47l	Nickel Glycolomate Strike	Nickel Metal	Weekly	29

Table 29-1. Solution Control - Continued

Solution Number	Name	Constituent	Test Frequency	Test Method
C-472	Copper Strike	Copper Metal Free Sodium Cyanide pH Sodium Carbonate Rochelle Salts	Weekly Weekly Weekly Monthly Monthly	16 18
C-473	Aluminum Alkaline Etch	Sodium Hydroxide Trisodium Phosphate	Weekly Weekly	30 30
C-474	Boric Acid/Sulfuric Acid Anodizing Solution	Sulfuric Acid Boric Acid Aluminum Chlorides Coating Weight Corrosion Resistance	Weekly Weekly Monthly Monthly Monthly Monthly	59 59 59 59 59 59
C-475	Dilute Chromate Seal Solution	Hexavalent Chromium pH Silicates Total Dissolved Solids	Weekly Weekly Monthly Monthly	60 18 60 60

* Embrittlement tests are not required if high strength steels (180,000 psi or above) are not processed through the solution.

29.4 SOLUTION PREPARATION AND CONTROL LIMITS.

Table 29-2. Processing Solutions

Solution	Material	Make-up Quantity	Control Limits	Preparation of Solution
C-101 Brass, Bronze, Gold, and Silver Strip Solution	Sodium Cyanide	90 g/L (12 oz/gal)	75 – 105 g/L (10 – 14 oz/gal)	1. Fill tank two-thirds full of tap water.
	Sodium Hydroxide (commercially equivalent products under NSNs 6810-00-043-1458, 6810-00-043-1459, 6810-00-174-6581, 6810-00-264-9025, and 6810-00-270-8177)	15 g/L (2 oz/gal)	7.5 – 22.5 g/L (1 – 3 oz/gal)	2. Add the sodium hydroxide slowly and cautiously while agitating solution.
		NOTE Use stainless steel cathodes.		3. Add the sodium cyanide slowly and cautiously. Continue agitation.

Table 29-2. Processing Solutions - Continued

Solution	Material	Make-up Quantity	Control Limits	Preparation of Solution
				4. Fill tank to operating level with tap water. 5. Use continuous agitation.
C-102 Cadmium and Titanium Cadmium Strip	Ammonium Nitrate (MIL-A-50460 and A-A-59476)	120 g/L (16 oz/gal)	Discard solution when it becomes ineffective.	1. Fill tank two-thirds full with tap water. 2. Add chemical slowly while agitating solution. 3. Fill tank to operating level with tap water. 4. Stir to mix.
C-103 Alkaline Chromium Strip	Sodium Hydroxide (commercially equivalent products under NSNs 6810-00-043-1458, 6810-00-043-1459, 6810-00-174-6581, 6810-00-264-9025, and 6810-00-270-8177)	150 g/L (20 oz/gal)	135 – 165 g/L (18 – 22 oz/gal)	1. Fill tank one-half full of tap water.
	M-623 (MacDermid, Inc.) (Optional Ingredient)		To maintain dark solution.	2. Add sodium hydroxide slowly and cautiously while slowly agitating solution. 3. Add M-623 slowly continuing agitation.
	Cathodes: Use low alloy steel cathodes around perimeter of tank.			4. Fill tank to operation level with tap water. 5. Heat to 49° – 54°C (120° – 130°F). 6. Use continuous agitation.
C-104 Acid Chromic Strip	Hydrochloric Acid (ASTM E1146)	50% by volume	40 – 60% by volume	1. Fill tank one-half full of tap water. 2. Add hydrochloric acid slowly and cautiously while slowly agitating solution.
	Inhibitor (Rodine 50) Amchem Products Inc. P.O. Box 33 Ambler, PA 19002	5 mL/gal		3. Add inhibitor continuing agitation. 4. Stir to mix. 5. Stir occasionally to prevent stratification of solution.
C-105 Chromium Strip	Phosphoric Acid (A-A-55820)	70% by volume	60 – 80% by volume	1. Fill tank 30% full of tap water.

Table 29-2. Processing Solutions - Continued

Solution	Material	Make-up Quantity	Control Limits	Preparation of Solution
				2. Add phosphoric acid slowly and cautiously while stirring the solution. 3. Stir to mix. 4. Stir occasionally to prevent stratification of solution.
C-106 Multideposit Strip Any approved equivalent proprietary solution may be substituted for this stripping solution.	Meta-Nitro Benzene Sulfonate	60 g/L (8 oz/gal)	See note below	1. Fill tank one-half full of tap water.
	Sodium Hydroxide (commercially equivalent products under NSNs 6810-00-043-1458, 6810-00-043-1459, 6810-00-174-6581, 6810-00-264-9025, and 6810-00-270-8177)	15 g/L (2 oz/gal)	ph 11 – 12	2. Heat to about 38°C (100°F).
	Sodium Cyanide	90 g/L (12 oz/gal)	75 – 105 g/L (10 – 14 oz/gal)	3. Add sodium cyanide slowly and cautiously continuing agitation. 4. Add sodium hydroxide slowly continuing agitation. 5. Add nitro benzene sulfonate slowly while agitating solution.
	CAUTION If solution attains a temperature of 140°F or above, remove parts and analyze solution. Temperatures above 140°F rapidly deteriorate this solution.		**NOTE** Additions of nitro benzene sulfonate are added at the rate of 2/3 total of sodium cyanide added. EXAMPLE: If 100 lbs of sodium cyanide are added, 66 lbs of nitro benzene sulfonate will be required.	6. Fill tank to operating level with tap water. 7. Heat to 49° – 54°C (120° – 130°F). 8. Use continuous agitation.
C-107 Silver Strip	Sodium Cyanide	120 g/L (16 oz/gal)	105 – 135 g/L (14 – 18 oz/gal)	1. Fill tank two-thirds full of tap water.

Table 29-2. Processing Solutions - Continued

Solution	Material	Make-up Quantity	Control Limits	Preparation of Solution
	Sodium Hydroxide (commercially equivalent products under NSNs 6810-00-043-1458, 6810-00-043-1459, 6810-00-174-6581, 6810-00-264-9025, and 6810-00-270-8177)	7.5 g/L (1 oz/gal)	6 – 9 g/L (0.8 – 1.2 oz/gal)	2. Add sodium hydroxide slowly and cautiously while agitating solution.
	Trisodium Phosphate (O-S-642, Type I)	45 g/L (6 oz/gal)	37.5 – 52.5 g/L (5 – 7 oz/gal)	3. Add sodium cyanide slowly continuing agitation. 4. Add trisodium phosphate continuing slow agitation. 5. Fill to operating level with tap water. 6. Stir to mix. 7. Heat 49° – 60°C (120° – 140°F). 8. Use continuous solution agitation.
C-108 Nitric Acid Strip	Nitric Acid (A-A-59105)	50% by volume	40 – 60% by volume	1. Fill tank one-half full of tap water. 2. Add nitric acid slowly and cautiously while slowly stirring solution. 3. Stir occasionally to prevent stratification of solution.
C-109 Tin Strip	Sodium Hydroxide (commercially equivalent products under NSNs 6810-00-043-1458, 6810-00-043-1459, 6810-00-174-6581, 6810-00-264-9025, and 6810-00-270-8177)	90 g/L (12 oz/gal)	75 – 105 g/L (10 – 14 oz/gal)	1. Fill tank two-thirds full of tap water. 2. Add the sodium hydroxide slowly while agitating the solution. 3. Fill tank to operating level with tap water. 4. Mix thoroughly.

Table 29-2. Processing Solutions - Continued

Solution	Material	Make-up Quantity	Control Limits	Preparation of Solution
C-110 Neutralizer	Sodium Hydroxide (commercially equivalent products under NSNs 6810-00-043-1458, 6810-00-043-1459, 6810-00-174-6581, 6810-00-264-9025, and 6810-00-270-8177)	75 g/L (10 oz/gal)	60 – 75 g/L (8 – 10 oz/gal)	1. Fill tank two-thirds full of tap water. 2. Add the sodium hydroxide slowly while agitating the solution. 3. Fill tank to operating level with tap water. 4. Mix thoroughly.
C-111 Zinc Strip	Hydrochloric Acid (ASTM E1146) Antimony Trioxide	50% by volume 1% by volume	40 – 60% by volume	1. Fill tank one-half full of tap water. 2. Add hydrochloric acid slowly and cautiously while slowly stirring solution. 3. Add antimony trioxide. 4. Stir to mix.
C-112 Lead Strip	Acetic Acid 30% Hydrogen Peroxide (A-A-59282)	2 parts by volume 1 part by volume	Make no additions. Use to depletion.	1. Fill tank two-thirds full of acetic acid. 2. Fill tank to operating level with hydrogen peroxide slowly and cautiously. 3. Stir to mix.
C-113 Lead Strip	m-Nitrobenzene Sulfonate Sodium Hydroxide (commercially equivalent products under NSNs 6810-00-043-1458, 6810-00-043-1459, 6810-00-174-6581, 6810-00-264-9025, and 6810-00-270-8177)	120 g/L (16 oz/gal) 45 g/L (6 oz/gal)	Use to depletion.	1. Fill tank two-thirds full of tap water. 2. Add the chemicals slowly while agitating the solution. 3. Fill to operating level with water.
C-114 Rhodium Strip	Hydrochloric Acid (ASTM E1146)	5% by volume	4 – 6% by volume	1. Fill tank two-thirds full of tap water. 2. Add hydrochloric acid slowly and cautiously while slowly stirring solution.

Table 29-2. Processing Solutions - Continued

Solution	Material	Make-up Quantity	Control Limits	Preparation of Solution
	Rodine 50 Inhibitor (Amchem Products, Inc.) P.O. Box 33 Ambler, PA 19002	1 ml/gal of solution		3. Add inhibitor. 4. Fill tank to operating level with tap water. 5. Stir to mix.
C-115 Lead or Indium Strip	Sodium Perborate	75 g/L (10 oz/gal)	Make no additions. Use to depletion.	1. Fill tank two-thirds full of tap water. 2. Add sodium perborate slowly stirring solution.
	Acetic Acid (Glacial) (A-A-55829)	75 g/L (10 oz/gal)		3. Add acetic acid slowly. 4. Stir to mix.
C-116 Anodize Strip	Chromic Acid (A-A-55827)	120 g/L (16 oz/gal)	105 – 135 g/L (14 – 18 oz/gal)	1. Fill tank two-thirds full of water. 2. Add the chromic acid slowly and cautiously while stirring solution.
	Phosphoric Acid (A-A-55820)	60 g/L (8 oz/gal)	45 – 75 g/L (6 – 10 oz/gal)	3. Add the phosphoric acid. 4. Fill tank to operating level with water. 5. Mix solution thoroughly. 6. Heat to 82° – 100°C (180° – 212°F). 7. May be used at lower temperatures for waxed parts.
C-117 Sulfuric-Nitric Acid Strip	Sulfuric Acid (A-A-55828)	19 parts by volume	If additions are required make additions in the same proportions as for make-up.	1. Slowly and cautiously add the sulfuric acid to the tank.
	Nitric Acid (A-A-59105)	1 part by volume		2. Slowly and cautiously add the nitric acid while stirring the solution.
C-118 Sulfuric Acid Strip	Sulfuric Acid (A-A-55828)	20% by volume	15 – 25% by volume	1. Fill tank 80% full of tap water.

Table 29-2. Processing Solutions - Continued

Solution	Material	Make-up Quantity	Control Limits	Preparation of Solution
	CAUTION Never add water to concentrated sulfuric acid as splattering may result.			2. Slowly and cautiously add fill tank to operating level with concentrated sulfuric acid. 3. Mix thoroughly.
C-119 Hydrochloric Acid Strip	Hydrochloric Acid (ASTM E1146) Antimony Trioxide	225 g/L (30 oz/gal) 15 g/L (2 oz/gal)	210 – 240 g/L (28 – 32 oz/gal)	1. Fill tank two-thirds full of water. 2. Add the acid slowly and cautiously while stirring solution. 3. Add the antimony trioxide. 4. Fill tank to operating level with tap water. 5. Stir to mix.
C-120 Nitric Acid Strip	Nitric Acid (A-A-59105)	100% by volume	35° – 42°Be	1. Slowly and cautiously pour concentrated nitric acid into tank to operating level.
C-121 Sulfuric Acid Strip	Sulfuric Acid (A-A-55828) Glycerine	97% by volume 30 g/L (4 oz/gal)	64° – 66°Be	1. Slowly and cautiously pour concentrated sulfuric acid into tank to operating level.
	CAUTION Do not introduce water into concentrated sulfuric acid as splattering may result.			
C-122 Nitric Acid 10%	Nitric Acid (A-A-59105)	10% by volume	8 – 12% by volume	1. Fill tank two-thirds full of tap water. 2. Add the nitric acid slowly and cautiously. 3. Fill tank to operating level with tap water. 4. Mix thoroughly.
C-123 Aluminum Electropolishing	Sulfuric Acid (A-A-55828)	1 – 60%	Control at ±10% of make-up volume.	1. Fill tank one-third full of tap water. 2. Add the sulfuric acid slowly and cautiously while stirring solution.

Table 29-2. Processing Solutions - Continued

Solution	Material	Make-up Quantity	Control Limits	Preparation of Solution
	Hydrofluoric Acid (O-H-795)	0.2 – 1.5%		3. Add the hydrofluoric acid cautiously. 4. Fill tank to operating level with tap water. 5. Mix solution thoroughly. 6. Heat to 60°C (140°F).
C-124 Aluminum Electropolishing	Orthophosphoric Acid (O-O-679)	10%	9 – 11%	1. Fill tank one-fourth full of tap water.
	Sulfuric Acid (A-A-55828)	60%	55 – 65%	2. Add the sulfuric acid slowly and cautiously while stirring the solution.
	Nitric Acid (A-A-59105)	1%	0.5 – 1.5%	3. Add the phosphoric acid slowly while stirring the solution. 4. Add the nitric acid slowly. 5. Fill tank to operating level with tap water. 6. Mix solution thoroughly. 7. Heat to 96°C (205°F).
C-125 Carbon Steel Electropolishing	Hydrochloric Acid (ASTM E1146)	25%	—	1. Fill tank three-fourths full of glycerine.
	Glycerine (O-G-491)	75%	—	2. Slowly and cautiously add the hydrochloric acid while stirring the solution. 3. Mix solution thoroughly.
C-126 Copper Electropolishing	Chromic Acid (A-A-55827)	12.5 parts/wt		1. Introduce the required amount of water into the tank.
	Sodium Dichromate	37.5 parts/wt		2. Add the sulfuric acid slowly while stirring the solution.
	Acetic Acid (A-A-55829)	12.5 parts/wt		
	Sulfuric Acid (A-A-55828)	10.0 parts/wt		3. Add the chromic acid and sodium dichromate.
	Water	100.0 parts/wt		4. Add the acetic acid slowly while stirring the solution. 5. Heat to 30°C (86°F).
C-127 Sulfuric Acid	Sulfuric Acid (A-A-55828)	70%	60 – 80%	1. Fill tank 30% full of tap water. 2. Slowly and cautiously add the sulfuric acid while stirring the solution. 3. Mix solution thoroughly.

Table 29-2. Processing Solutions - Continued

Solution	Material	Make-up Quantity	Control Limits	Preparation of Solution
C-128 Phosphoric Sulfuric Acid	Orthophosphoric Acid (A-A-55820) Sulfuric Acid (A-A-55828) Water	15 – 70% 15 – 60% Remainder	Control at ±10% of make-up volume.	1. Introduce required amount of tap water into tank. 2. Slowly and cautiously add the sulfuric acid while stirring the solution. 3. Slowly and cautiously add the orthophosphoric acid while stirring the solution. 4. Mix solution thoroughly.
C-129 Phosphoric Acid	Orthophosphoric Acid (A-A-55820) Water	75 – 100% Remainder	Control at ±10% of make-up volume.	1. Introduce the required amount of tap water into the tank. 2. Slowly add the orthophosphoric acid while stirring solution. 3. Mix solution thoroughly. 4. Heat at 66°C (150°F).
C-130 Sulfuric-Phosphoric Acid	Sulfuric Acid (A-A-55828) Orthophosphoric Acid (A-A-55820) Water	15% 63% 22%	13 – 17% 61 – 65%	1. Introduce the required amount of water into the tank. 2. Slowly and cautiously add the sulfuric acid while stirring the solution. 3. Add the orthophosphoric acid slowly while stirring the solution. 4. Mix solution thoroughly. 5. Heat to 27° – 79°C (80° – 175°F).
C-131 Aluminum Electropolishing	Sodium Carbonate (O-S-571) Trisodium Phosphate (O-S-642, Type I)	15% 5%	13 – 17% 4 – 6%	1. Fill tank one-half full of tap water. 2. Add chemicals slowly while stirring solution. 3. Fill tank to operating level with tap water. 4. Mix solution thoroughly. 5. Heat to 74° – 88°C (165° – 190°F).
C-132 Carbon Steel Electropolishing	Sulfuric Acid (A-A-55828) Orthophosphoric Acid (A-A-55820)	15% 63%	13 – 17% 61 – 65%	1. Introduce the required amount of tap water into the tank. 2. Slowly add the sulfuric acid while stirring the solution.

Table 29-2. Processing Solutions - Continued

Solution	Material	Make-up Quantity	Control Limits	Preparation of Solution
	Chromic Acid (A-A-55827) Water	10% 12%	8 – 12%	3. Slowly add the orthophosphoric acid while stirring the solution. 4. Add the chronic acid. 5. Mix solution thoroughly. 6. Heat to 52°C (125°F).
C-133 Copper Electropolishing	Arsenic Acid Orthophosphoric Acid (A-A-55820) Chronic Acid (A-A-55827) Water	15%/wt 55%/wt 3%/wt 27%/wt	13 – 17% 50 – 60% 1 – 4%	1. Introduce the required amount of tap water into the tank. 2. Add the orthophosphoric acid while stirring the solution. 3. Add the arsenic acid while stirring the solution. 4. Add the chronic acid. 5. Mix solution thoroughly. 6. Heat 54°C (130°F).
C-134 Chromic Acid Pickle	Chromium Trioxide (A-A-55827)	180 g/L (24 oz/gal)	150 – 210 g/L (20 – 28 oz/gal)	1. Fill tank two-thirds full of distilled water. 2. Add the chromium trioxide slowly while stirring the solution. 3. Fill tank to operating level with distilled water. 4. Mix solution thoroughly. 5. Heat to 88° – 99°C (190° – 210°F).
C-135 Hydrofluoric Acid Pickle	Hydrofluoric Acid (60%)	187 mL/liter (24 fl oz/gal)	15 – 20% by volume	1. Fill tank two-thirds full of distilled water. 2. Slowly and cautiously add the acid. 3. Fill tank to operating level with distilled water. 4. Stir to mix.
C-136 Acid Fluoride	Sodium, Potassium, or Ammonium Bifluoride (Na_2HT_2,KHF_2 or NH_yHF_2)	50 g/L (6 2/3 oz/gal)	45 – 52.5 g/L (6 – 7 oz/gal)	1. Fill tank two-thirds full of distilled water. 2. Add the bifluoride slowly.

Table 29-2. Processing Solutions - Continued

Solution	Material	Make-up Quantity	Control Limits	Preparation of Solution
	NOTE Maintain chemical concentration, so that a 100 mL sample requires between 45 and 55 mL of 1.0N sodium hydroxide (NaOH) to produce a pink color with a phenolphthalein indicator.			3. Stir to dissolve. 4. Fill tank to operating level with distilled water. 5. Stir to mix.
C-137 Anodize Strip	Chromium Trioxide (A-A-55827) Phosphoric Acid (A-A-55820)	22.6 g/L (3 oz/gal) 37.6 g/L (5 oz/gal)	18.8 – 26.4 g/L (2.5 – 3.5 oz/gal) 30 – 60 g/L (4 – 8 oz/gal)	1. Fill tank two-thirds full of tap water. 2. Add the chromium trioxide slowly and cautiously. 3. Stir to dissolve. 4. Add the phosphoric acid. 5. Fill tank to operating level with tap water. 6. Mix solution thoroughly. 7. Heat to 82° – 100°C (180° – 212°F).
C-138 Hydrochloric Acid Strip	Hydrochloric Acid (ASTM E1146)	100% by volume	72 – 100% by volume	1. Fill tank to operating level with hydrochloric acid.
C-139 Copper Strip	Chromic Acid Sulfuric Acid	478 g/L (64 oz/gal) 31 mL/liter (4.0 fl oz/gal)	400 – 500 g/L (54 – 68 oz/gal) 25 – 35 mL/liter (3.2 – 4.5 fl oz/gal)	1. Fill tank one-half full of distilled water. 2. Add chromium trioxide flakes slowly and cautiously while agitating solution. 3. Add sulfuric acid slowly and cautiously continuing agitation. 4. Fill to operating level with distilled water. 5. Stir to mix.
C-140 Chromium Strip	Chromic Acid	248 g/L (33 oz/gal)	225 – 263 g/L (30 – 35 oz/gal)	1. Fill tank one-half full of distilled water. 2. Add chromium trioxide flakes slowly and cautiously while agitating solution. 3. Fill to operating level with distilled water. 4. Stir to mix.

Table 29-2. Processing Solutions - Continued

Solution	Material	Make-up Quantity	Control Limits	Preparation of Solution
C-201 Alkaline Cleaner (heavy duty)	Sodium hydroxide (commercially equivalent products under NSNs 6810-00-043-1458, 6810-00-043-1459, 6810-00-174-6581, 6810-00-264-9025, and 6810-00-270-8177)	90 g/L (12 oz/gal)	86.3 – 93.7 g/L (11.5 – 12.5 oz/gal)	1. Fill tank two-thirds full of tap water.
NOTE A proprietory solution meeting the requirements of the specification may be substituted.	Trisodium Phosphate (O-S-642, Type I)	15 g/L (2 oz/gal)	7.5 – 22.5 g/L (1 – 3 oz/gal)	2. Add chemicals slowly while agitating the solution.
	Sodium Metasilicate	26.3 g/L (3.5 oz/gal)	22.5 – 30 g/L (3 – 4 oz/gal)	3. Fill tank to operating level with tap water.
	Alkyl Aryl Sodium Sulfonate (optional ingredient)	1.5 g/L (0.2 oz/gal)	As Required	4. Add the alkyl aryl sodium sulfonate. 5. Heat to 52° – 57°C (125° – 135°F). 6. Use continuous agitation.
C-202 Alkaline Cleaner for Aluminum	Sodium Hydroxide (commercially equivalent products under NSNs 6810-00-043-1458, 6810-00-043-1459, 6810-00-174-6581, 6810-00-264-9025, and 6810-00-270-8177)	7.5 g/L (1 oz/gal)	3.8 – 11.3 g/L (0.5 – 1.5 oz/gal)	1. Fill tank two-thirds full of tap water.

Table 29-2. Processing Solutions - Continued

Solution	Material	Make-up Quantity	Control Limits	Preparation of Solution
NOTE A non-etch proprietory solution meeting specification requirements may be substituted.	Trisodium Phosphate (O-S-642, Type I)	15 g/L (2 oz/gal)	7.5-22.5 g/L (1 – 3 oz/gal)	2. Add chemicals slowly while agitating.
	Sodium Metasilicate	30 g/L (4 oz/gal)	22.5 – 37.5 g/L (3 – 5 oz/gal)	3. Fill to operating level with tap water. 4. Heat to 52° – 57°C (125° – 135°F).
C-203 Alkaline Cleaner (heavy duty)	Sodium Hydroxide (commercially equivalent products under NSNs 6810-00-043-1458, 6810-00-043-1459, 6810-00-174-6581, 6810-00-264-9025, and 6810-00-270-8177)	75 g/L (10 oz/gal)	60 – 90 g/L (8 – 12 oz/gal)	1. Fill tank two-thirds full of tap water.
	Trisodium Phosphate (O-S-642, Type I)	45 g/L (6 oz/gal)	37.5 – 52.5 g/L (5 – 7 oz/gal)	2. Heat to 38°C (100°F). 3. Add materials slowly while agitating solution.
	Wetting Agent (Alkyl Aryl Sodium Sulfonate) (Optional)	1.5 g/L (0.2 oz/gal)	As Required	4. Fill tank to operating level with tap water. 5. Mix thoroughly. 6. Add the wetting agent. 7. Heat to 52° – 57°C (125° – 135°F). 8. Use continuous agitation.
C-204 Alkaline Smut Remover	Sodium Hydroxide	165 g/L (22 oz/gal)	135 – 180 g/L (18 – 24 oz/gal)	1. Fill tank one-half full of tap water.
	Sodium Cyanide (12 oz/gal)	90 g/L (12 oz/gal)	60 – 105 g/L (8 – 14 oz/gal)	2. Add the sodium hydroxide slowly and cautiously while agitating solution. 3. Add the sodium cyanide cautiously. 4. Fill tank to operating level with tap water.

Table 29-2. Processing Solutions - Continued

Solution	Material	Make-up Quantity	Control Limits	Preparation of Solution
				5. Mix thoroughly. 6. Heat to 52° – 57°C. (125° – 135°F).
C-205 Alkaline Cleaner for Aluminum	Trisodium Phosphate (O-S-642, Type I) Sodium Carbonate	30 g/L (4 oz/gal) 15 g/L (2 oz/gal)	22.5 – 37.5 g/L (3 – 5 oz/gal) 7.5 – 22.5 g/L (1 – 3 oz/gal)	1. Fill tank two-thirds full of tap water. 2. Add the trisodium phosphate slowly while agitating the solution. 3. Add the sodium carbonate. 4. Fill to operating level with tap water. 5. Heat to 52° – 57°C (125° – 135°F). 6. Use continuous agitation.
C-206 Alkaline Rust Remover	A-A-59260	240 g/1 (32 oz/gal)	120 – 360 g/L (16 – 48 oz/gal)	1. Fill tank two-thirds full of tap water. 2. Add the A-A-59260 slowly while stirring solution. 3. Fill to operating level with tap water. 4. Stir thoroughly. 5. Heat to 82° – 100°C (180° – 212°F). 6. Use continuous agitation.
C-207 Sodium Hydroxide	Sodium Hydroxide	75 g/L (10 oz/gal)	60 – 90 g/L (8 – 12 oz/gal)	1. Fill tank two-thirds full of tap water. 2. Add the sodium hydroxide slowly. 3. Stir to dissolve chemicals. 4. Fill tank to operating level with tap water. 5. Heat to 82° – 93°C (180° – 200°F).
C-208 Alkaline Cleaner (SAE AMS 1547)	Specification SAE AMS 1547 Alkaline Cleaning Compound	30 – 45 g/L (4 – 6 oz/gal)	30 – 45 g/L (4 – 6 oz/gal)	1. Fill tank one-half full of tap water. 2. Heat to 49° – 54°C (120° – 130°F).

Table 29-2. Processing Solutions - Continued

Solution	Material	Make-up Quantity	Control Limits	Preparation of Solution
				3. Add cleaning compound slowly while continuing to agitate unit. The required amount has been added and dissolved. 4. Fill tank to operating level with tap water. 5. Stir or agitate to mix thoroughly.
C-209	Sodium Hydroxide (commercially equivalent products under NSNs 6810-00-043-1458, 6810-00-043-1459, 6810-00-174-6581, 6810-00-264-9025, and 6810-00-270-8177)	140 g/L (8 oz/gal)	45 – 75 g/L (6 – 10 oz/gal)	1. Fill tank two-thirds full of tap water.
	Trisodium Phosphate (O-S-642, Type I)	9.75 g/L (1.3 oz/gal)	7.5 – 12 g/L (1 – 1.6 oz/gal)	2. Add chemicals slowly while stirring the solution.
	Wetting Agent	0.75 g/L (0.1 oz/gal)	Add as needed	3. Stir to dissolve all chemicals. 4. Fill tank to operating level with tap water. 5. Add the wetting agent. 6. Stir to mix. 7. Heat to 88° – 99°C (190° – 210°F).
C-210	Sodium Hydroxide (commercially equivalent products under NSNs 6810-00-043-1458, 6810-00-043-1459, 6810-00-174-6581, 6810-00-264-9025, and 6810-00-270-8177)	7.5 g/L (1 oz/gal)	3.8 – 11.2 g/L (0.5 – 1.5 oz/gal)	1. Fill tank two-thirds full of tap water.
	Trisodium Phosphate (O-S-642, Type I)	60 g/L (8 oz/gal)	30 – 90 g/L (4 – 12 oz/gal)	2. Add the chemicals slowly while agitating the solution.
	Sodium Carbonate	15 g/L (2 oz/gal)	7.5 – 45 g/L (1 – 6 oz/gal)	3. Fill tank to operating level with tap water. 4. Mix thoroughly. 5. Heat to 52° – 57°C (125° – 135°F).
C-211	Potassium Hydroxide (A-A-59282)	15.0 g/L (2.0 oz/gal)	7.5 – 22.5 g/L (1.0 – 3.0 oz/gal)	1. Fill tank two-thirds full with tap water.

Table 29-2. Processing Solutions - Continued

Solution	Material	Make-up Quantity	Control Limits	Preparation of Solution
	Sodium Gluconate	15.0 g/L (2.0 oz/gal)	7.5 – 22.5 g/L (1.0 – 3.0 oz/gal)	2. Add the chemicals slowly while agitating the solution.
	Sodium Nitrate (O-S-634)	3.8 g/L (0.5 oz/gal)	1.5 – 6.0 g/L (0.2 – 0.8 oz/gal)	3. Fill tank to operating level with tap water. 4. Mix thoroughly.
	NOTE For every 100 lbs addition of potassium hydroxide, add 50 lbs of sodium gluconate. No addition of sodium nitrate required.			5. Heat to 71° – 82°C (160° – 180°F).
C-301 Hydrochloric Acid Etch Solution	Hydrochloric Acid (ASTM E1146)	15% by volume	10 – 20% by volume	1. Fill tank 85% of operating 1evel with water. 2. Add acid slowly and cautiously while agitating solution. 3. Stir to mix.
C-302 Hydrochloric Acid Etch Solution	Hydrochloric Acid (ASTM E1146)	50% by volume	40 – 60% by volume	1. Fill tank one-half full of tap water. 2. Slowly and cautiously add hydrochloric acid while slowly stirring solution. 3. Stir to mix.
C-303 Hydrochloric Acid Etch Solution	Hydrochloric Acid (ASTM E1146)	30% by volume	25 – 35% by volume	1. Fill tank 70% full of tap water. 2. Fill tank to operating level with hydrochloric acid. 3. Mix thoroughly.
C-304 Sulfuric Acid Etch	Sulfuric Acid (A-A-55828)	40% by volume	35 – 45% by volume	1. Fill tank one-half full of tap water.

Table 29-2. Processing Solutions - Continued

Solution	Material	Make-up Quantity	Control Limits	Preparation of Solution
	CAUTION Never add water to concentrated acid. Splattering of acid will cause serious burns. **NOTE** Solution should be stirred at the beginning of each day or after solution has remained undisturbed for 8 hours.			2. Add sulfuric acid slowly and cautiously while stirring solution. 3. Fill tank to operating level with tap water. 4. Stir to mix.
C-305 Chromic Acid Preplate Etch	Chromium Trioxide (A-A-55827)	210 g/L (28 oz/gal)	187.5 – 225 g/L (25 – 30 oz/gal)	1. Fill tank two-thirds full with tap water 2. Add chromium trioxide flakes slowly and cautiously while agitating solution. 3. Fill to operating level with tap water. 4. Use continuous solution agitation. 5. Heat to 52° – 57°C (125° – 135°F).
C-306 Sulfuric Hydrofluoric Acid Etch	Sulfuric Acid (A-A-55828) Hydrofluoric Acid (O-H-795)	25% by volume 5% by volume	20 – 30% by volume 4 – 6% by volume	1. Fill tank one-half full of tap water. 2. Add sulfuric acid slowly and cautiously while stirring solution. 3. Add hydrofluoric acid slowly and cautiously while stirring solution. 4. Fill tank to operating level with tap water. 5. Stir to mix.
	CAUTION • Never add water to concentrated acid. Splattering of acid will cause serious burns. • Hydrofluoric acid is extremely hazardous and should be handled with utmost caution. Wear protective clothing. **NOTE** Solution should be stirred at the beginning of each day or after it has remained undisturbed for an 8-hour period.			

Table 29-2. Processing Solutions - Continued

Solution	Material	Make-up Quantity	Control Limits	Preparation of Solution
C-307 Nitric Hydrofluoric Acid Etch	Nitric Acid (A-A-59105)	35% by volume	30 – 40% by volume	1. Fill tank one-fifth full with tap water.
	Hydrofluoric Acid (O-H-795)	3% by volume	2.5 – 3.5% by volume	2. Add nitric acid slowly and cautiously while stirring solution.
	CAUTION Never add water to concentrated acid.			3. Add hydrofluoric acid slowly and cautiously while stirring solution.
	NOTE Solution should be stirred at the beginning of each day or after solution has remained undisturbed for 8 hours.			4. Fill to operation level with tap water. 5. Stir to mix.
C-308 Dry Acid Salts	Dry Acid Salts or (Metex M-629) or (Actant 85) or (Isoprep 191 or (Pictax)	120 g/L (16 oz/gal)	90 – 150 g/L (12 – 20 oz/gal)	1. Fill tank two-thirds full of tap water. 2. Add dry acid salts slowly and cautiously while agitating solution.
	NOTE Solution should be stirred at the beginning of each day or after it has remained undisturbed for an 8-hour period.			3. Fill tank to operating level with tap water. 4. Stir to mix.
C-309 Dry Acid Salts Etch	Dry acid salts (Metex Acid Salts M-629 Actant 85 Isoprep 191 Pictax)	300 g/L (40 oz/gal)	285 – 315 g/L (38 – 42 oz/gal)	1. Fill tank two-thirds full of tap water. 2. Add dry acid salts slowly and cautiously while agitating solution.
	NOTE Solution should be stirred at the beginning of each day or after it has remained undisturbed for an 8-hour period.			3. Fill tank to operating level with tap water. 4. Stir to mix.
C-310 Nitric Hydrofluoric Acid Etch Solution	Nitric Acid (A-A-59105)	70% by volume	60 – 80% by volume	1. Fill tank one-fifth full of tap water.

Table 29-2. Processing Solutions - Continued

Solution	Material	Make-up Quantity	Control Limits	Preparation of Solution
	Hydrof1uoric Acid (O-H-795)	15% by volume	10 – 20% by volume	2. Slowly and cautiously add nitric acid while slowly stirring solution. 3. Add hydrofluoric acid slowly and cautiously while stirring solution. 4. Stir to mix.
	CAUTION Use protective clothing. Hydrofluoric acid is extremely hazardous and should be handled with utmost caution.			
C-311 Nitric Acid Etch Solution	Nitric Acid (A-A-59105)	50% by volume	40 – 60% by volume	1. Fill tank one-half full of tap water. 2. Slowly and cautiously add nitric acid while slowly stirring solution. 3. Stir to mix.
C-312 Sulfuric Acid Solution	Sulfuric Acid (A-A-55828)	20% by volume	15 – 25% by volume	1. Fill tank 80% full of tap water. 2. Fill tank to operating level with sulfuric acid slowly and cautiously. 3. Stir thoroughly.
	CAUTION Never add water to concentrated acid. Splattering of acid will cause serious burns.			
C-313 Hydrochloric Acid	Hydrochloric Acid (ASTM E1146)	3% by volume	2 – 4% by volume	1. Fill tank two-thirds full of tap water. 2. Add hydrochloric acid. 3. Fill tank to operating level with tap water. 4. Mix thorough1y.
C-314 Fluoboric Acid	Fluoboric Acid	3% by volume	2 – 4% by volume	1. Fill tank two-thirds full of tap water. 2. Add fluoboric acid. 3. Fill tank to operating level with tap water. 4. Mix thoroughly.
C-315 Sulfuric Acid Etch 10%	Sulfuric Acid (A-A-55828)	10% by volume	5 – 15% by volume	1. Fill tank two-thirds full of tap water.

Table 29-2. Processing Solutions - Continued

Solution	Material	Make-up Quantity	Control Limits	Preparation of Solution
	CAUTION Never add water to concentrated acid. Splattering of acid will cause serious burns.			2. Add the acid slowly while stirring the solution. 3. Fill tank to operating level with tap water. 4. Stir to mix.
C-316 Nitric -Sulfuric Actane 70 Etch	Nitric Acid (A-A-59105) Sulfuric Acid (A-A-55828) Actane 70 Enthone	50% by volume 25% by volume 120 g/L (16 oz/gal)	48 – 52% by volume 23 – 27% by volume	1. Fill tank one-fourth full of tap water. 2. Slowly and cautiously add the sulfuric acid. 3. Mix solution. 4. Add the nitric acid slowly and cautiously. 5. Mix solution 6. Add the Actane 70 slowly. 7. Mix solution thoroughly.
C-317 Etch Solution for Aluminum Alloys	Turcoform Etchant 9H Compound Dissolved Aluminum or (Turcoform Alketch Inhibitor)	112.5 g/L (15.0 oz/gal) 75 g/L (10 oz/gal)	90 – 120 g/L (12 – 16 oz/gal)	1. Fill tank two-thirds full of tap water. 2. Add etchant compound slowly and cautiously while stirring the solution until all of the compound has been added and dissolved. 3. Add dissolved aluminum. 4. Fill tank to operating level with water. 5. Stir or agitate to mix thoroughly. 6. Heat to 88° – 93°C (190° – 200°F).
C-318 Chem-Mill Etch Solution for Ferrous Base Alloys	Hydrochloric Acid (ASTM E1146) Nitric Acid (A-A-59105)	689 mL/l (0.69 gal/gal) 210 mL/l (0.21 gal/gal)	Refer to Control Chart for free acid concentration. Refer to Control Chart for nitrate ion concentration.	1. Add the required amount of phosphoric acid and hydrochloric acid to the tank. 2. Place the metal in a plastic or titanium basket and immerse in the acid mixture. 3. Add in small quantities the calculated amount of nitric acid.

Table 29-2. Processing Solutions - Continued

Solution	Material	Make-up Quantity	Control Limits	Preparation of Solution
	Phosphoric Acid (O-N-670) Scrap Metal, Any Stainless Steel	 100 g/L (13.5 oz/gal)	 Refer to Control Chart for phosphoric ion concentration.	**CAUTION** Add only enough nitric at a time to keep dissolution reaction of the metal going. 4. Maintain the bath temperature between 38° – 49°C (100° – 120°F). 5. After the metal is dissolved, analyze the etchant solution for free acid, nitrate, and phosphate ions.
C-319 Aluminum Deoxidizer and Desmutter	Deoxidizing and Desmutting Compound for Aluminum (Oakite 34 or equal)	75 – 120 g/L (10 – 16 oz/gal)	90 – 110 g/L (12 – 15 oz/gal)	1. Fill tank two-thirds full of deionized water. 2. Add the compound slowly and cautiously while stirring the solution until all of the compound has been added and dissolved. 3. Fill the tank to the operating level with deionized water. 4. Stir to mix.
C-320 Chem-Mill Etch Solution for Titanium Alloys	Nitric Acid (A-A-59105) Hydrofluoric Acid (O-H-795) Turcoform Etchant No. 201 Titanium Alloy (scrap)	11% by volume 6.5% by volume 2.6 g/L (10 g/gal) 50 g/L (0.41 lb/gal)	1.5 – 11.7N 2.5 – 2.8N	1 Fill the etch tank half full with tap water. 2. Add the required amount of hydrofluoric acid carefully and mix thoroughly. 3. Put the titanium scrap metal in a mesh basket and immerse in the etch tank to dissolve.

Table 29-2. Processing Solutions - Continued

Solution	Material	Make-up Quantity	Control Limits	Preparation of Solution
				NOTE Dissolve at such a rate that excessive evolution of gassing is avoided. Provide cooling if necessary to prevent the temperature of the solution from exceeding 55°C (130°F). 4. Add the required amount of nitric acid and Turcoform etchant No. 201 and adjust to the operating level by addition of tap water. 5. Agitate to mix thoroughly. 6. Make additions of hydrochloric, nitric, and phosphoric acid required to restore solution to recommended concentration. Phosphate should be 1.5N – 4.5N acid and nitrate as indicated in the table for bath control for alloy being etched. 7. Heat to and maintain bath at 61° – 65°C (142° – 148°F).
C-321 Aluminum Alloy Etchant	Sodium Hydroxide (commercially equivalent products under NSNs 6810-00-043-1458, 6810-00-043-1459, 6810-00-174-6581, 6810-00-264-9025, and 6810-00-270-8177)	255 g/L (34 oz/gal)	225 – 255 g/L (30 – 34 oz/gal)	1. Fill tank two-thirds full of distilled water.
	Sulfur	5 g/L (0.67 oz/gal)		2. Add the chemical while stirring the solution.
	Gluconic Acid	5 g/L (0.67 oz/gal)		3. Fill tank to operating level with distilled water. 4. Mix solution thoroughly. 5. Heat to 80° – 90°C (190° – 200°F).

Table 29-2. Processing Solutions - Continued

Solution	Material	Make-up Quantity	Control Limits	Preparation of Solution
C-322 Nitric Acid 25%	Nitric Acid (A-A-59105)	25% by volume	20 – 30% by volume	1. Fill tank three-fourths full of tap water. 2. Slowly and cautiously add nitric acid to operating level. 3. Stir to mix.
C-323 Aluminum Desmut	SC-590 Concentrate (Specialty Chemical and Services Inc. 89 Mangum St. S.W. Atlanta, Georgia 30313) Sulfuric Acid (A-A-55828)	3% by volume 6% by volume	1 – 4% by volume 5 – 8% by volume	1. Fill tank two-thirds full of distilled water. 2. Slowly and cautiously add the sulfuric acid. 3. Mix solution. 4. Add the SC-590 concentrate. 5. Fill tank to operating level with distilled water. 6. Mix solution thoroughly.
C-324 Deoxidizer Any proprietary solution meeting the requirements of MIL-A-8625 may be substituted.	Sodium Dichromate Sulfuric Acid (A-A-55828)	60 g/L (3 oz/gal) 139 mL/l (17.5 fl oz/gal)		1. Fill tank two-thirds full of distilled water. 2. Add the sodium dichromate and stir to dissolve. 3. Slowly and cautiously add the sulfuric acid. 4. Fill tank to operating level with distilled water. 5. Mix thoroughly.
C-325 Deoxidizer	Diversey 514	(As per manufacturer's instructions)		
C-326 Sulfuric Acid Ammonium Bifluoride Etchant	Sulfuric Acid (A-A-55828) Ammonium Bifluoride	25% by volume 71 g/L (9.5 oz/gal)	20 – 30% by volume 56 – 86 g/L (7.5 – 11.5 oz/gal)	1. Fill tank one-half full of tap water. 2. Add sulfuric acid slowly and cautiously while stirring solution. 3. Add ammonium bifluoride slowly and cautiously while stirring solution. 4. Fill tank to operating level with tap water. 5. Stir to mix.

WARNING

Never add water to concentrated acid. Splattering of acid will cause serious burns.

NOTE

Solutions shall be stirred at the beginning of each day or after they have remained undisturbed for an 8-hour period.

Table 29-2. Processing Solutions - Continued

Solution	Material	Make-up Quantity	Control Limits	Preparation of Solution
C-327 Non-Chromated Desmutter	Isoprep 184 (Allied-Kelite)	24% by volume	22 – 25% by volume	1. Fill tank one-half full of deionized water. 2. Turn on agitation. 3. Slowly add 25% by volume of Isoprep 184. 4. Add deionized water to bring solution to working level.
C-401 Regular Brass Plating	Cuprous Cyanide	30 g/L (4 oz/gal)	Cu 20.25 – 24.75 g/L (2.7 – 3.3 oz/gal)	1. Fill tank two-thirds full of distilled water.
	Zinc Cyanide	9.375 g/L (1.25 oz/gal)	Zn 4.875 – 6.375 g/L (0.65 – 0.85 oz/gal)	2. Add chemicals (except ammonia hydroxide) slowly while agitating solution.
	Sodium Cyanide	52.5 g/L (7 oz/gal)	Free CN 17.25 – 20.25 g/L (2.3 – 2.7 oz/gal)	3. Fill tank to operating level with distilled water.
	Sodium Carbonate	30 g/L (4 oz/gal)		4. Add ammonia hydroxide.
	Ammonia Hydroxide	120 g/L (16 oz/100 gals)	As required to reduce reddish color of solution.	5. Heat 24° – 38°C (75° – 100°F).
	ANODES: Use anodes: 80% copper, 20% zinc.			
	Arsenic may be used as a brightener. Dissolve 2 lbs sodium hydroxide in 1/2 gal water and add 1 lb white arsenic. Use 2 – 4 fluid oz/gal to each 100 gallons of plating solution. Avoid an excess of brightener as it will cause the anodes to turn black and plating deposit will be pale. **NOTE** Do not use air agitation on plating solution. Use mechanical agitation or move part through solution.			
C-402 High Speed Brass Plating	Cuprous Cyanide	75 g/L (10 oz/gal)	CU 40.75 – 56.25 g/L (7.5 oz/gal)	1. Fill tank two-thirds full of distilled water.
	Zinc Cyanide	30 g/L (4 oz/gal)	Zn 13.5 – 16.5 g/L (1.8 – 2.2 oz/gal)	2. Add chemicals slowly while agitating solution.
	Sodium Cyanide	150 g/L (20 oz/gal)	Free 41.25 – 48.75 g/L (5.5 – 6.5 oz/gal)	3. Fill tank to operating 1evel with distilled water.
	Sodium Hydroxide (reagent)	4.5 g/L (0.6 oz/gal)		4. Heat to 40° – 46°C (105° – 115°F).
	Sodium Carbonate	15 g/L (2 oz/gal)	pH (12.0 – 13.0)	
	ANODES: Use anodes: 80% copper, 20% zinc.			

Table 29-2. Processing Solutions - Continued

Solution	Material	Make-up Quantity	Control Limits	Preparation of Solution
	Do not use arsenic brighteners in this solution. Propriety brighteners are available if needed. **NOTE** Do not use air agitation on plating solution. Use mechanical agitation or move parts through solution.			
C-403 Nickel-Strike	Nickel Chloride	210 g/L (28 oz/gal)		1. Fill tank two-thirds full of distilled water.
	Hydrochloric Acid	110 mL/l (14 fl oz/gal)	87 – 150 mL/l (11 – 19 fl oz/gal)	2. Add nickel chloride slowly while agitating solution.
	Nickel as Metal		52.5 – 67.5 g/L (7 – 9 oz/gal)	3. Add hydrochloric acid slowly. 4. Stir solution. 5. Fill tank to operating level with distilled water. 6. Mix thoroughly.
C-404 Bronze Plating	Cuprous Cyanide	30 g/L (4.0 oz/gal)	Cu 21 – 22.5 g/L (2.8 – 3.0 oz/gal)	1. Fill tank two-thirds full of distilled water.
	Potassium Stannate	37.5 g/L (5.0 oz/gal)	Tin 13.5 – 15 g/L (1.8 – 22.0 oz/gal)	2. Add chemicals slowly while agitating solution.
	Potassium Cyanide	67.5 g/L (9.0 oz/gal)	Free CN 20.25 – 22.5 g/L (2.7 – 3.0 oz/gal)	3. Fill to operating level with distilled water.
	Potassium Hydroxide	11.25 g/L (1.5 oz/gal)	Free alkali 9 – 10.5 g/L (1.2 – 1.4 oz/gal)	4. Heat to 63° – 71°C (145° – 160°F).
	Rochelle Salts	45 g/L (6.0 oz/gal)	Rochelle Salts 41.25 – 48.75 g/L (5.5 – 6.5 oz/gal)	
	ANODES: Use anodes conforming with commercially equivalent products under NSN 3426-00-276-9950.			
C-405 Cadmium Plating Solution	Cadmium Oxide	27 g/L (3.5 oz/gal)		1. Fill tank two-thirds full with distilled water.
	Cadmium Metal		22.5 – 30g/L (3 – 4 oz/gal)	2. Add sodium cyanide slowly and cautiously while agitating solution.
	Sodium Cyanide	105 g/L (14 oz/gal)	90 – 120 g/L (12 – 16 oz/gal)	
	Sodium Hydroxide	7.5 g/L (1.0 oz/gal)	7.5 – 22.5 g/L (1 – 3 oz/gal)	3. Add cadmium oxide slowly and cautiously while agitating solution.
	Sodium Carbonate	7.5 g/L (1.0 oz/gal)	7.5 – 60 g/L (1.8 oz/gal)	
	Ratio Total $\frac{NaCN}{cd}$		(3 – 5):1	

Table 29-2. Processing Solutions - Continued

Solution	Material	Make-up Quantity	Control Limits	Preparation of Solution
	Ideal Ratio		3.75 ± 0.4	
	Sodium Hydroxide (commercially equivalent products under NSNs 6810-00-043-1458, 6810-00-043-1459, 6810-00-174-6581, 6810-00-264-9025, and 6810-00-270-8177)	7.5 g/L (1.0 oz/gal)	7.5 – 22.5 g/L (1.0 – 3.0 oz/gal)	4. Add sodium hydroxide slowly and cautiously while agitating solution.
	Sodium Carbonate	7.5 g/L (1.0 oz/gal)	7.5 – 60 g/L (1.0 – 8.0 oz/gal)	5. Add sodium carbonate slowly and cautiously while agitating solution.
	Ratio NaCN/Cd		(3.75 – 5):1	6. Fill to operating level with distilled water.
	ANODES: Use anodes conforming to Specification A-A-51126. Sodium carbonate and sodium hydroxide concentrations will rise due to chemical reactions within the solution, therefore make-up additions should be held to a minimum.			7. Heat to 27° – 32°C (80° – 90°F). 8. Use continuous filtration.
C-406 Chromic Acid Bright Dip	Chromium Trioxide (A-A-55827)	52.5 g/L (7 oz/gal)	30 – 60 g/L (4 – 8 oz/gal)	1. Fill tank three-fourths full of distilled water.
	Sulfuric Acid	1.5 g/L (0.2 oz/gal)	0.9 – 1.9 g/L (0.12 – 0.25 oz/gal)	2. Add the chromium trioxide flakes. 3. Add sulfuric acid slowly. 4. Fill tank to operating level with distilled water. 5. Mix thoroughly.
C-407 Chromium Plating	Chromium Trioxide (A-A-55827)	247.5 g/L (33 oz/gal)	225 – 270 g/L (30 – 36 oz/gal)	1. Fill tank one-half full of distilled water.
	Sulfuric Acid	1.4 mL/l (0.179 fl oz/gal)	2.25 – 2.7 g/L (0.30 – 0.36 oz/gal) Maintain ratio of sulfate to chromic acid at (85 – 115):1	2. Add chromium trioxide flakes slowly and cautiously while agitating solution. 3. Fill tank near operating level with distilled water.
	NOTE • Solution should be dummied prior to being used for production plating using 27 A/dm^2 (250 ASF) for 24 hours. • Anodes composition can be 93% lead – 7% tin or 92% lead – 8% antimony.			4. Add sulfuric acid slowly and cautiously while agitating solution. 5. Fill to operating level with distilled water. 6. Heat to 52° – 57°C (125° – 135°F).

Table 29-2. Processing Solutions - Continued

Solution	Material	Make-up Quantity	Control Limits	Preparation of Solution
				7. Use continuous agitation (mechanical agitation is recommended).
C-408 Chromium Plating Solution	Chromium Trioxide (A-A-55827) Sulfuric Acid	337.5 g/L (45 oz/gal) 1.7 mL/l (0.215 fl oz/gal)	300 – 375 g/L (40 – 50 oz/gal) 3 – 3.75 g/L (0.4 – 0.5 oz/gal) Maintain ratio of sulfate to chromic acid at (85 – 115):1	1. Fill tank one-half full of distilled water. 2. Add chromium trioxide flakes slowly and cautiously while agitating solution. 3. Fill tank near operating level with distilled water. 4. Add sulfuric acid slowly and cautiously continuing agitation. 5. Fill to operating level with distilled water. 6. Heat to 52° – 57°C (125° – 135°F). 7. Use continuous agitation (mechanical agitation is recommended.
	NOTE • Solution should be dummied prior to being used for production plating using 27 A/dm^2 (250 ASF) for 24 hours. • Anodes composition can be 93% lead – 7% tin or 92% lead – 8% antimony.			
C-409 Chromium Plating Solution	Chromium Trioxide (A-A-55827) Sulfuric Acid	187.5 g/L (25 oz/gal) 1.06 mL/l (0.134 fl oz/gal)	172.5 – 202.5 g/L (23 – 27 oz/gal) 1.725 – 2.025 g/L (0.23 – 0.27 oz/gal) Maintain ratio of sulfate to chromic acid at (85 – 115):1	1. Fill tank one-half full of distilled water. 2. Add chromium trioxide flakes slowly and cautiously while agitating solution. 3. Fill tank near operating level with distilled water. 4. Add sulfuric acid slowly and cautiously continuing agitation. 5. Fill to operating level with distilled water. 6. Heat to 52° – 57°C (125° – 135°F). 7. Use continuous agitation (mechanical agitation is recommended).
	NOTE • Solution should be dummied prior to being used for production plating using 27 A/dm^2 (250 ASF) for 24 hours. • Anodes composition can be 93% lead – 7% tin or 92% lead – 8% antimony.			
C-410 Zincate Solution	Sodium Hydroxide	525 g/L (70 oz/gal)	525 g/L (70 oz/gal)	1. Fill tank one-half full of distilled water.

Table 29-2. Processing Solutions - Continued

Solution	Material	Make-up Quantity	Control Limits	Preparation of Solution
Other equivalent formulations including proprietary formulations, may be substituted.	Zinc Oxide	97.5 g/L (13 oz/gal)	97.5 g/L (13 oz/gal)	2. Add sodium hydroxide slowly and cautiously while agitating solution when dissolved.
	Ferric Chloride	0.975 g/L (0.13 oz/gal)		3. Add zinc oxide slowly continuing agitation.
	Rochelle Salts	9.75 g/L (1.3 oz/gal)		4. Fill tank to operating level with distilled water.
			Control by Baume.	5. Add ferric chloride.
			Add chemicals in make-up ratio if Baume decreases. Add water if Baume increases.	6. Add Rochelle Salts.
				7. Stir to mix.
				8. Operating temperatures 21° – 24°C (70° – 75°F).
C-411 Copper Strike Solution	Cuprous Cyanide	41.25 g/L (5.4 oz/gal)	Cu (Metal) 15 – 30 g/L (2 – 4 oz/gal)	1. Fill tank one-half full.
				2. Heat to 38° – 54°C (100° – 130°F).
	Sodium Cyanide	49.5 g/L (6.6 oz/gal)	Free CN 1.875 – 3.75 g/L (0.25 – 0.50 oz/gal)	3. Add sodium cyanide slowly and cautiously while agitating solution.
	Sodium Carbonate	30 g/L (4.0 oz/gal)	30 – 60 g/L (4 – 8 oz/gal)	4. Add copper cyanide slowly and cautiously continuing agitation.
	Sodium Hydroxide	4.5 g/L (0.6 oz/gal)	3.75 – 11.25 gl (0.5 – 1.5 oz/gal)	5. Add sodium carbonate slowly continuing agitation.
	Rochelle Salts	45 g/L (6 oz/gal)	30 – 60 g/L 4 – 8 oz/gal)	6. Add Rochelle Salts slowly continuing agitation.
				7. Fill to operating level with distilled water.
				8. Stir to mix.
				9. Heat to 38° – 54°C (100° – 130°F).
				10. Filter continuously.
C-412 Nickel Plating Solution (soft low stress deposit)	Nickel Sulfamate Plating Solution	As per manufacturer's instructions.		1. Prepare as per manufacturer's instructions.
	Nickel Metal		75 – 90 g/L (10 – 12 oz/gal)	2. Add anti-pit agent, as necessary.
	Nickel Chloride (as Chloride)		7.5 g/L max (1 oz/gal)	3. Immerse several bags filled with boric acid in the solution.
	Boric Acid		Keep solution saturated. (30 g/L min) (4 oz/gal)	4. Analyze solution to determine if all constituents are present in desired concentrations.

Table 29-2. Processing Solutions - Continued

Solution	Material	Make-up Quantity	Control Limits	Preparation of Solution
	Anti-Pit Agent (Sodium Laurel Sulfate) (optional ingredient)		As Required	5. Make additions if necessary.
	Nickel Carbonate		As required to adjust pH.	6. Prior to use, electrically purify the solution using corrugated cathodes and a current density of 0.54 A/dm^2 (5 ASF) for 24 hours.
			pH: 3.5 – 5.0	
C-413 Neutralizer Solution	Sodium Hydroxide (commercially equivalent products under NSNs 6810-00-043-1458, 6810-00-043-1459, 6810-00-174-6581, 6810-00-264-9025, and 6810-00-270-8177)	30 g/L (4 oz/gal)	15 – 45 g/L (2 – 6 oz/gal)	1. Fill tank two-thirds full of tap water.
				2. Add the sodium hydroxide slowly and cautiously.
				3. Fill tank to operating level with distilled water.
				4. Mix thoroughly.
C-414 Nickel Plating Solution (hard compressive stress deposit)	Nickel Sulfamate Plating Solution	As per manufacturer's instructions.		1. Prepare as per manufacturer's instructions.
				2. Add anti-pit agent, if necessary.
	Nickel Metal		75 – 90 g/L (10 – 12 oz/gal)	3. Add stress reducer, if necessary.
	Nickel Chloride (as Chloride)		3.75 – 5.625 g/L (0.5 – 0.75 oz/gal)	4. Immerse several bags of boric acid in solution.
	Boric Acid		Keep solution saturated 30 g/L (4 oz/gal) min.	5. Analyze the solution to determine if constituents are present in desired concentrations.
	Anti-Pit Agent (Sodium Laurel Sulfate)		As Required	6. Make additions, if necessary.
	Nickel Carbonate		As required to adjust pH. pH 3.5 – 5.0.	7. Prior to use electrically, purify the solution using corrugated cathode and a current density of 0.54 A/dm^2 (5 ASF).

Table 29-2. Processing Solutions - Continued

Solution	Material	Make-up Quantity	Control Limits	Preparation of Solution
	Sulfamate Nickel Stress Reducer (Saccharin solution)		As required to maintain a compressive stress of 0 – 15000 psi at 0.0003-inch thickness.	
C-415 Copper Plating Solution	Cuprous Cyanide	45 g/L (6 oz/gal)	33.75 – 63.75 g/L (4.2 – 8.5 oz/gal)	1. Fill tank one-half full of distilled water.
	Sodium Cyanide	56.25 g/L (7.5 oz/gal)		2. Heat to 49° – 60°C (120° – 140°F).
	Sodium Carbonate	30 g/L (4 oz/gal)	30 – 75 g/L (4 – 10 oz/gal)	3. Add the sodium cyanide slowly and cautiously while agitating solution.
	Sodium Hydroxide	7.5 g/L (1 oz/gal)	1.875 – 15 g/L (0.25 – 2 oz/ gal)	4. Add the copper cyanide slowly and cautiously. Continue agitation.
	Rochelle Salts	45 g/L (6 oz/gal)	30 – 60 g/L (4 – 8 oz/gal)	5. Add the sodium carbonate slowly. Continue agitation.
				6. Add the sodium hydroxide slowly. Continue agitation.
	Copper Metal		22.5 – 45 g/L (3 – 6 oz/gal)	7. Add the Rochelle Salts slowly. Continue agitation.
	Free Sodium Cyanide		3.75 – 22.5 g/L (0.5 – 3 oz/gal)	8. Fill tank to operating level with distilled water.
	NOTE Use anodes conforming with commercially equivalent products under NSN 3426-00-276-9950.			9. Mix thoroughly. 10. Heat to 49° – 57°C (120° – 135°F). 11. Use continuous solution filtration.
C-416 Acid Copper Plating	Cuprous Sulfate	210 g/L (28 oz/gal)	180 – 240 g/L (24 – 32 oz/ gal)	1. Fill tank two-thirds full of distilled water.
	Sulfuric Acid	60 g/L (8 oz/gal)	52.5 – 67.5 g/L (7 – 9 oz/ gal)	2. Add the sulfuric acid slowly and cautiously while stirring solution.
	Thiourea	0.01125 g/L (0.0015 oz/ gal)		3. Add the copper sulfate, continue stirring solution.
	Dextrin	0.01125 g/L (0.0015 oz/ gal)		4. Add the thiourea and dextrin.
				5. Stir to dissolve.
	Molasses	0.75 g/L (0.10 oz/ gal)		6. Fill tank to operating level with distilled water.
	Copper as Metal		45 – 60 g/L (6 – 8 oz/gal)	7. Add the molasses.

Table 29-2. Processing Solutions - Continued

Solution	Material	Make-up Quantity	Control Limits	Preparation of Solution
				8. Mix thoroughly.
C-417 Silver Strike Solution	Potassium Silver Cyanide or Silver Cyanide	4.5 g/L (0.6 oz/gal) 3.0 g/L (0.4 oz/gal)		1. Fill tank two-thirds full of distilled water.
	Potassium Cyanide	60 g/L (8 oz/gal) or 61.4 g/L (8.2 oz/gal) if silver cyanide used in make-up.		2. Add the potassium cyanide slowly and cautiously while agitating solution.
	Silver Metal		1.5 – 3 g/L (0.2 – 0.4 oz/gal)	3. Add the silver cyanide slowly and cautiously continuing solution agitation.
	Free Potassium Cyanide		52.5 – 67.5 g/L (7 – 9 oz/gal)	4. Fill tank to operating level with distilled water.
				5. Mix thoroughly.
				6. Use continuous solution filtration.
	NOTE Use stainless steel anodes.			
C-418 Silver Plating Solution	Potassium Silver Cyanide or Silver Cyanide	97.5 g/L (13 oz/gal) 68.1 g/L (9.1 oz/gal)		1. Fill tank one-half full of distilled water.
	Potassium Cyanide	75 g/L (10 oz/gal) or 108 g/L (14/oz gal) if silver cyanide used in make-up.		2. Add the potassium cyanide slowly and cautiously while agitating solution.
	Potassium Carbonate	30 g/L (4 oz/gal)	30 – 90 g/L gal) (4 – 12 oz/gal)	3. Add the potassium silver cyanide slowly and cautiously continuing solution agitation.
	Potassium Hydroxide	7.5 g/L (1 oz/gal)	3.75 – 15 g/L (0.5 – 2 oz/gal)	4. Add the potassium carbonate cautiously continuing agitation.
	Silver Metal		37.5 – 67.5 g/L (5 – 9 oz/gal)	5. Add the potassium hydroxide cautiously.
	Free Potassium Cyanide		60 – 90 g/L (8 – 12 oz/gal)	6. Fill tank to operating level with distilled water.
				7. Mix thoroughly.
	NOTE Use high purity 99.9+% fine silver anodes bagged in dynel, nylon cloth, or polypropylene.			8. Use continuous filtration.

Table 29-2. Processing Solutions - Continued

Solution	Material	Make-up Quantity	Control Limits	Preparation of Solution
C-419 High Speed Silver Plating Solution	Silver Cyanide	90 g/L (12 oz/gal)	75 – 112.5 g/L (10 – 15 oz/gal)	1. Fill tank one-half full of distilled water.
	Potassium Cyanide	112.5 g/L (15 oz/gal)	90 – 135 g/L (12 – l8 oz/gal)	2. Add the potassium cyanide slowly and cautiously while agitating the solution.
	Potassium Carbonate	15 g/L (2 oz/gal)	15 – 112.5 g/L (2 – 15 oz/gal)	3. Add the silver cyanide slowly and cautiously. Continue agitation.
	Potassium Hydroxide	7.5 g/L (1 oz/gal)	0 – 30 g/L (0 – 4 oz/gal)	4. Add the potassium carbonate cautiously. Continue agitation.
	Silver Metal		56.25 – 86.25 g/L (7.5 – 11.5 oz/gal)	5. Add the potassium hydroxide cautiously. Continue agitation.
	Free Potassium Cyanide		52.5 – 90 g/L (7 – 12 oz/gal)	6. Fill tank to operating level with distilled water. 7. Mix thoroughly. 8. Heat to 38° – 49°C (100° – 120°F). 9. Use continuous solution filtration.
C-420 Tin Plating Solution	Sodium Stannate	90 g/L (12 oz/gal)	60 – 105 g/L (8 – 14 oz/gal)	1. Fill tank one-half full of distilled water.
	Sodium Hydroxide	11.2 g/L (1.5 oz/gal)	7.5 – 15 g/L (1 – 2 oz/gal)	2. Heat to 60° – 66°C (140° – 150°F).
	Sodium Acetate	22.5 g/L (3 oz/gal)	15 – 30 g/L (2 – 4 oz/gal)	3. Add the sodium stannate slowly while slowly agitating solution.
	Hydrogen Peroxide (optional)	0.45 g/L (0.06 oz/gal) (Optional)	As required to prevent dark solution.	4. Add the sodium hydroxide slowly. Continue agitation. 5. Add the sodium acetate slowly and cautiously continuing agitation. 6. Add the hydrogen peroxide cautiously. 7. Fill tank to operating level with distilled water. 8. Mix thoroughly. 9. Heat to 71° – 82°C (160° – 180°F).
	NOTE • Potassium stannate and potassium hydroxide may be used in lieu of sodium compounds. • Do not stir solution during plating operation. • Use pure tin anodes or tin alloyed with 1% aluminum.			
C-421 Nickel Plating (watts)	Nickel Sulfate	330 g/L (44 oz/gal)	300 – 360 g/L (40 – 48 oz/gal)	In an auxiliary tank: 1. Fill tank one-half full of distilled water.

Table 29-2. Processing Solutions - Continued

Solution	Material	Make-up Quantity	Control Limits	Preparation of Solution
	Nickel Chloride	37.5 g/L (5 oz/gal)	30 – 45 g/L (4 – 6 oz/gal)	2. Add the nickel sulfate, nickel chloride, and boric acid.
	Boric Acid	37.5 g/L (5 oz/gal)	33.75 – 41.25 g/L (4.5 – 5.5 oz/gal)	3. Stir to dissolve chemicals.
	Wetting Agent	As necessary		4. Adjust solution ph to 5.2 by adding nickel carbonate.
			pH 2.7 – 3.8	5. Add 1.9 g/L (0.25 oz/gal) of activated charcoal. 6. Stir solution for approximately 1 hour. 7. Allow solution to settle for 2 – 3 hours. 8. Filter solution into the plating tank. 9. Fill tank to operating level with distilled water. 10. Adjust pH to 2.7 – 3.8 by adding sulfuric acid. 11. Add wetting agent until correct surface tension is attained. 12. Heat to 46° – 54°C (115° – 130°F). 13. Use continuous filtration.
C-422 Rust Retardant Solution	Sodium Chromate	15 g/L (2 oz/gal)	Discard solution when dirty.	1. Fill tank to operating level with water. 2. Add chemicals. 3. Mix thoroughly.
C-423 Cyanide Dip Solution	Sodium Cyanide	75 g/L (10 oz/gal)	60 – 90 g/L (8 – 12 oz/gal)	1. Fill tank two-thirds full of distilled water. 2. Add the sodium cyanide slowly and cautiously. 3. Fill tank to operating level with distilled water. 4. Mix thoroughly.
C-424 Zinc Plating Solution	Zinc Cyanide	60 g/L (8 oz/gal)	60 – 82.5 g/L (8 – 11 oz/gal)	In an auxiliary tank:
	Sodium Cyanide	42 g/L (5.6 oz/gal)	39 – 66 g/L (5.2 – 8.8 oz/gal)	1. Fill tank two-thirds full of distilled water.
	Sodium Hydroxide	78.75 g/L (10.5 oz/gal)	75 – 90 g/L (10 – 12 oz/gal)	2. Add the sodium hydroxide slowly and cautiously while agitating solution.
	Metallic Zinc Dust	33.75 g/L (4.5 oz/gal)		3. Add the sodium cyanide slowly and cautiously. Continue agitation.

Table 29-2. Processing Solutions - Continued

Solution	Material	Make-up Quantity	Control Limits	Preparation of Solution
	Sodium Polysulfide	1.5 g/L (0.2 oz/gal)		4. Add the zinc cyanide slowly. Continue agitation.
	Metallic Zinc		33 – 45 g/L (4.4 – 6 oz/gal)	5. Add the zinc dust slowly. Continue agitation.
	Total Sodium Cyanide		82.5 – 135 g/L (11 – 18 oz/gal)	6. Let solution mix for 1 hour.
				7. Allow solution to settle approximately 5 hours.
				8. Filter solution into plating tank through a well packed filter leaving the last several inches of solution in the auxiliary tank (discard this residue).
				9. Fill tank to operating level with distilled water.
				10. Heat to 24° – 38°C (75° – 100°F).
				11. Dummy solution for 48 hours at (2 – 3 A/dm^2 (2 – 3 ASF) using as many anodes and cathodes as can be placed in solution (use at least 3 anodes per linear foot of tank.
				12. Dissolve the sodium polysulfide in hot water and slowly add to plating solution.
				13. Mix thoroughly.
C-425 Lead Fluoborate Plating Solution	Lead Fluoborate Concentrate (50 – 52% $Pb(BF_4)_2$)	250 mL/l (32 fl oz/gal)		1. Fill tank one-half full of distilled water.
	Fluoboric Acid	37.5 g/L (5 oz/gal)	30 g/L (4 oz/gal) min	2. Add the lead fluoborate concentrate slowly and cautiously while agitating solution.
	Boric Acid		Maintain saturated solution.	3. Add the fluoboric acid slowly and cautiously. Continue agitation.
	Lead as Metal		90 – 120 g/L (12 – 16 oz/gal)	4. Dissolve the animal glue in hot water and add to plating solution.
			pH 1.5 or lower	
	Animal Glue	0.1875 g/L (0.025 oz/gal)	Maintain at level to prevent treeing, pinholes, roughness of deposit, and low throwing power.	5. Dilute solution with distilled water to a specific gravity of 1.19 – 1.21.
				6. Mix thoroughly.

Table 29-2. Processing Solutions - Continued

Solution	Material	Make-up Quantity	Control Limits	Preparation of Solution
	NOTE Use anodes with a purity (lead plus tin) of at least 99.9%.			
C-426 Lead-Tin-Antimony Plating	Boric Acid	26.25 g/L (3.5 oz/ gal)		1. Fill tank one-half full with distilled water.
	Hydroquinone	0.525 g/L (0.07 oz/gal)		2. Add boric acid and mix to dissolve.
	Fluoboric Acid	51 mL/l (6.5 fl oz/gal)		3. Mix hydroquinone with a small amount of distilled water, then add to solution and mix thoroughly.
	Lead Fluoborate Concentrate (50%)	203 mL/l (26 fl oz/gal)		4. Add fluoborate acid and mix. 5. Add lead fluoborate and mix.
	Tin Fluoborate Concentrate (45 – 49%)	101 mL/l (13 fl oz/gal)		6. Add tin fluoborate and mix.
	Antimony Fluoborate Concentrate (39 – 42%)	30 mL/l (3.8 fl oz/gal)		7. Add antimony fluoborate. 8. Mix solution thoroughly.
	Lead as Metal		75 – 127.5 g/L (10 – 17 oz/gal)	9. Preparation of EDAMIN-R:
	Stannous as Metal		20.25 – 40.5 g/L (2.7 – 5.4 oz/gal)	a. Mix 2.1 oz/gal EDAMIN-R with a small portion of plating solution and mix thoroughly.
	Antimony as Metal		3 – 7.5 g/L (0.4 – 1.0 oz/gal)	b. Allow mixture to age 24 hours. c. Filter into plating solution. 10. Fill tank to operating level with distilled water. 11. Mix thoroughly. 12. Use continuous solution filtration. 13. Bath operating temperature: 20° – 22°C (68° – 72°F).
C-427 Gold Plating Solution	Potassium Aurocyanide (reagent)	16.4 g/L (2 Tr oz/gal)		1. Fill tank two-thirds full of distilled water.
	Potassium Cyanide (reagent)	30 g/L (4 oz/gal)		2. Add chemicals slowly and cautiously while agitating solution.

Table 29-2. Processing Solutions - Continued

Solution	Material	Make-up Quantity	Control Limits	Preparation of Solution
	Potassium Carbonate (reagent)	30 g/L (4 oz/gal)	9.75 – 120 g/L (1.3 – 16 oz/gal)	3. Fill tank to operating level with distilled water.
	Potassium Phosphate Dibasic (reagent)	30 g/L (4 oz/gal)		4. Mix thoroughly.
				5. Heat to 54° – 71°C (130° – 160°F).
	Metallic Gold		4.1 – 16.4 g/L (0.5 – 2 Tr oz/gal)	
	Free Potassium Cyanide		18.75 – 30 g/L (2.5 – 4 oz/gal)	
			pH 10.6 – 118	
	NOTE Use either high purity gold or 304 stainless steel anodes.			
C-428 Rhodium Plating Solution	Rhodium Sulfate (5 grams Rh/100 mL concentrate)	105 mL/l (13.3 fl oz/gal)		1. Fill tank two-thirds full of distilled water.
	Sulfuric Acid (reagent)	18 g/L (2.5 oz/gal)	22.5 – 30 g/L (3 – 4 oz/gal)	2. Add the sulfuric acid slowly and cautiously while slowly stirring solution.
	Metallic Rhodium		4 – 6.6 g/L	3. Add the rhodium concentrate slowly: continue to stir solution.
				4. Fill tank to operating level with distilled water.
				5. Mix thoroughly.
	CAUTION Do not add water to concentrated acid.			6. Heat to 38° – 49°C (100° – 120°F).
	NOTE Use platinum anodes.			
C-429 Indium Plating Solution	Indium Sulfate	45 g/L (6 oz/gal)		1. Fill tank two-thirds full of distilled water.
	Sodium Sulfate	9.75 g/L (1.3 oz/gal)	22.5 – 27 g/L (3 – 3.6 oz.gal)	2. Add chemicals slowly while agitating solution.
	Metallic Indium		18.9 – 21.3 g/L (2.3 – 2.6 Tr oz/gal)	3. Fill tank to operating level with distilled water.
			pH 2.0 – 2.7	4. Mix thoroughly.

Table 29-2. Processing Solutions - Continued

Solution	Material	Make-up Quantity	Control Limits	Preparation of Solution
				5. Heat to 21° – 60°C (70° – 140°F).
	NOTE Use soluble indium anodes or insoluble platinum or graphite anodes.			
C-430 Electroless Nickel Plating [1]	Nickel Sulfate	16.125 g/L (2.15 oz/gal)	Use solution to depletion then discard.	1. Fill tank near operating level with distilled water.
	Sodium Hypophosphite	18 g/L (2.4 oz/gal)		2. Add the nickel sulfate while agitating the solution.
	Acetic Acid	11.85 g/L (1.58 fl oz/gal)		3. Dissolve before proceeding.
	Sodium Hydroxide	7.875 g/L (1.05 oz/gal)		4. Add the sodium hypophosphite.
				5. Dissolve before proceeding.
	Molybdenum-Trioxide	0.00898 g/L (0.034 g/gal)		6. Add the acetic acid.
	Hydroxylamine-Sulfate	0.05997 g/L (0.227 g/gal)		7. Dissolve the sodium hydroxide in a small amount of distilled water.
		pH 5.2 – 5.6		8. Very slowly add the dissolved sodium hydroxide while agitating the solution.
				9. Allow solution to agitate for 30 minutes.
				10. Add the predissolved hydroxylamine sulfate.
				11. Add the predissolved molybdenum trioxide.
				12. Allow solution to agitate for 30 minutes.
				13. Check pH of solution (must be 5.2 – 5.6).
				NOTE Add acetic acid to lower pH. Add sodium hydroxide to raise pH.
				14. Temperature: 77° – 88°C (170° – 190°F).

Table 29-2. Processing Solutions - Continued

Solution	Material	Make-up Quantity	Control Limits	Preparation of Solution
C-431 Delta Cadmium Solution	Cadmium Oxide	37.5 g/L (5 oz/gal)	22.5 – 28.5 g/L (3.0 – 3.8 oz/gal)	1. Fill tank one-half full of distilled water.
	Sodium Cyanide Total CN	120 g/L (16 oz/gal)	97.5 – 127.5 g/L (13 – 27 oz/gal)	2. Add sodium cyanide.
	Sodium Hydroxide	15 g/L (2 oz/gal)	15 – 22.5 g/L (2.0 – 3.0 oz/gal)	3. Mix to dissolve.
	Sodium Carbonate	15 g/L (2 oz/gal)		4. Make cadmium oxide into a slurry and add slowly to the cyanide solution.
				5. Mix thoroughly.
	Titanium [2]	See preparation of solution, Step 12.	40 – 70 ppm	6. Add sodium carbonate.
				7. Add sodium hydroxide.
	Ratio NaCN/Cd		(3.5 – 4.5)/1	8. Fill tank to operating level with distilled water.
				9. Mix thoroughly.
				10. Begin filtration of solution.
				11. Dummy solution at a current density of 5 – 10 ASF for at least 18 hours.
				12. Prepare titanium paste as follows:
				a. Mix 1 pound titan paste, 5 fl oz 35% hydrogen peroxide, and 2 oz sodium hydroxide to 1 gal of distilled water.
				NOTE Adhere to this mixture for initial charge of filter. The initial charge should allow for at least 1 pound of titan paste per 10 square feet of filtration area.
				b. Mix thoroughly, cover and age overnight.
				c. Mix into blend 32 – 84 oz of filter aid per gallon of blend.
				13. Coat filter with blend by introduction of mixture through filter inlet. Use entirety of prepared blend.

Table 29-2. Processing Solutions - Continued

Solution	Material	Make-up Quantity	Control Limits	Preparation of Solution
				14. Add into plating solution 5 fl oz of 35% hydrogen peroxide per 100 gallons of plating solution. 15. Filter plating solution through titan blend coated filter until titanium content is at desired concentration. 16. Use continuous agitation. 17. Bath operation temperature: 15° – 29°C (60° – 85°F).
C-433 Copper Fluoborate Plating	Copper Fluoborate Copper as Metal Fluoboric Acid	225 g/L (30 oz/gal) To adjust pH pH 0.8 – 1.7 Sp gr. 21 – 22	52.5 – 67.5 g/L (7 – 9 oz/gal) As necessary to adjust pH. pH 0.8 – 1.7 Sp gr. 21 – 22	1. Fill tank two-thirds full of distilled water. 2. Add the copper fluoborate cautiously. 3. Fill tank to operating level with distilled water. 4. Mix thoroughly. 5. Adjust pH if necessary by adding fluoboric acid. 6. Operating temperature 27° – 77°C (80° – 170°F).
	NOTE Use oxide-free, non-phosphorized copper anodes.			
C-435 Conversion Coating	Iridite 8P [3]	As per manufacturer's instructions.		1. Fill tank three-fourths full of water. 2. Add the chemicals slowly. 3. Fill tank to operating level with water. 4. Mix thoroughly.
C-436 Phosphate Treatment	Phosphoric Acid (A-A-55820)	2% by volume	1 – 3% by volume	1. Fill tank three-fourths full of water. 2. Add the acid cautiously. 3. Mix thoroughly.
C-437 Black Oxide Solution	Sodium Hydroxide (commercially equivalent products under NSNs 6810-00-043-1458, 6810-00-043-1459, 6810-00-174-6581, 6810-00-264-9025, and 6810-00-270-8177)	525 g/L (70 oz/gal)	Add chemicals in make-up proportions to maintain solution temperature.	1. Fill tank one-half full of water. 2. Add the Sodium hydroxide slowly and cautiously while stirring solution.

Table 29-2. Processing Solutions - Continued

Solution	Material	Make-up Quantity	Control Limits	Preparation of Solution
	Sodium Nitrate	375 g/L (50 oz/gal)		3. Add the Sodium nitrate, cautiously continuing agitation. 4. Fill tank to operating level with water. 5. Stir thoroughly. 6. Heat to operating temperature.
	NOTE It may be necessary to adjust the make-up concentration to obtain the desired bath operating temperature. When doing so and for other required additions, the ration of 7 parts of sodium hydroxide to 5 parts of sodium nitrate must be maintained.			
C-438 Black Oxide MIL-C-46110	Commercial Compound Conforming to MIL-C-46110	As per manufacturer's instructions.		
C-439 Chromic-Acid Dip	Chromium Trioxide (A-A-55827)	0.6 g/L (0.08 oz/gal)	Add chromium trioxide to maintain pH 2 – 4.	1. Fill tank to operating level with distilled water. 2. Add the chromium trioxide. 3. Stir throughly. 4. Heat 71° – 82°C (160° – 180°F).
	NOTE Total acid and free acid titration when ratio exceeds 7, discard solution.			
C-440 Tin Fluoborate Plating	Stannous Fluoborate Concentrate (51%)	244 mL/l (31.3 fl oz/gal)		1. Fill tank two-thirds full of distilled water.
	Fluoboric Acid (49%)	398 mL/l (51 fl oz/gal)		2. Slowly add the stannous fluoborate concentrate and stir to mix.
	Free Fluoboric Acid		100 – 200 g/L (13.3 – 26.6 oz/gal)	3. Add the fluoboric acid and mix thoroughly.
	Stabilizing Peptone	18 g/L (2.4 oz/gal)		4. Add the stabilizing peptone and mix solution.
	Beta-Naphthol	0.98 g/L (0.13 oz/gal)		5. In a separate vessel, dissolve the B-Naphthol in a small quantity of warm isopropyl alcohol. Slowly stir and add the dissolved Beta-Naphthol to the plating solution.
	Metallic Tin		75 – 90 g/L (10 – 12 oz/gal)	6. Fill tank to operating level with distilled water. 7. Mix solution thoroughly. 8. Operating temperature 21° – 43°C (70° – 110°F).
	NOTE Use pure tin cast anodes.			

Table 29-2. Processing Solutions - Continued

Solution	Material	Make-up Quantity	Control Limits	Preparation of Solution
C-441 Chromic Acid Anodize	Chromium Trioxide (A-A-55827)	48 g/L (6.5 oz/gal)	30 – 105 g/L (4 – 14 oz/gal) Chlorides 0.02% max Sulfate 0.05% max pH 0.85 max (control of aluminum) Trivalent Chromium 4 g/L (0.5 oz/gal) max	1. Fill tank two-thirds full of distilled water. 2. Slowly add the chromium trioxide. 3. Stir to dissolve. 4. Fill tank to operating level with tap water. 5. Stir to mix. 6. Heat to 33° – 37°C (91° – 99°F).
C-442 Anodize Seal	Nickel Acetate	5 g/L (0.65 oz/gal)	3.5 – 6.5 g/L (0.46 – 0.85 oz/gal) pH 5.0 – 6.5	1. Fill tank two-thirds full of distilled water. 2. Add the nickel acetate. 3. Stir to dissolve. 4. Fill to operating level with distilled water. 5. Adjust pH as necessary with boric acid, acetic acid, or sodium hydroxide. 6. Heat to 88° – 100°C (190° – 212°F).
C-443 Sodium Dichromate Anodize Seal	Sodium Dichromate	52.5 g/L (7 oz/gal)	37.5 – 67.5 g/L (5 – 9 oz/gal) pH 5.0 – 6.5	1. Fill tank two-thirds full of distilled water. 2. Add the sodium dichromate slowly. 3. Stir to dissolve. 4. Fill tank to operating level with distilled water. 5. Stir to mix. 6. Heat to 88° – 100°C (190° – 212°F).
C-444 Sulfuric Acid Anodize	Sulfuric Acid	165 g/L (22 oz/gal) (12 fl oz/gal)	130 – 220 g/L (17 – 29 oz/gal) (9.2 – 15.8 fl oz/gal) Chloride (NaCl) 0.02% max Chloride (NaCl) 0.02% max Aluminum 20 g/L max	1. Fill tank one-half full of distilled water. 2. Slowly and cautiously add the sulfuric acid while stirring the solution. 3. Fill tank to operating level with distilled water. 4. Stir to mix. 5. Operating temperature: 18° – 24°C (65° – 75°F).

Table 29-2. Processing Solutions - Continued

Solution	Material	Make-up Quantity	Control Limits	Preparation of Solution
C-445 Hard Anodize	Sulfuric Acid Oxalic Acid	135 g/1 (9.8 fl oz/gal) 15 g/L (2 oz/gal)	105 – 165 g/L (14 – 22 oz/gal) 3.7 – 22.5 g/L (0.5 – 3 oz/gal) Chloride (NaCl) 0.02% max Aluminum 20 g/L max	1. Fill tank two-thirds full of distilled water. 2. Slowly and cautiously add the sulfuric acid while stirring the solution. 3. Slowly add the oxalic acid. 4. Fill tank to operating level with distilled water. 5. Stir to mix. 6. Operating temperature 0° – 4°C (32° – 40°F).
C-446 Chromate Conversion Coat [4]	Chromium Trioxide (A-A-55827) Potassium Ferrocyanide Barium Silicofluoride	15 g/L (2 oz/gal) 2.7 g/L (0.36 oz/gal) 2.4 g/L (0.32 oz/gal) pH 1.5 – 1.7	4 – 18.7 g/L (0.5 – 2.5 oz/gal) 2.7 g/L (0.36 oz/gal) 2.4 g/L (0.32 oz/gal)	1. Fill tank two-thirds full of distilled water. 2. Add chemicals slowly while stirring solution. 3. Fill to operating level with distilled water. 4. Stir to mix. 5. Adjust pH as necessary with sulfuric acid and/or chromium trioxide.
C-447 Phosphoric Acid Anodize	Orthophosphoric Acid	108.7 g/L (14.5 oz/gal)	97.5 – 120 g/L (13 – 16 oz/gal)	1. Fill tank two-thirds full of distilled water. 2. Add the acid slowly and cautiously while stirring the solution. 3. Fill tank to operating level with distilled water. 4. Stir to mix. 5. Operating temperature: 20° – 25°C (65° – 77°F).
C-448 Chrome Pickle Treatment for Wrought Magnesium	Sodium Dichromate Nitric Acid (A-A-59105)	180 g/L (24 oz/gal) 125 mL/l (16 fl oz/gal)	165 – 195 g/L (22 – 26 oz/gal) 63 – 187 mL/l (8 – 24 fl oz/gal)	1. Fill tank two-thirds full of distilled water. 2. Add the sodium dichromate slowly. 3. Stir to dissolve. 4. Add the nitric acid slowly and cautiously. 5. Fill tank to operating level with distilled water. 6. Stir to mix. 7. Heat to 21° – 32°C (70° – 90°F).
C-449 Dichromate Treatment	Sodium Dichromate	150 g/L (20 oz/gal)	120 – 180 g/L (16 – 24 oz/gal)	1. Fill tank two-thirds full of distilled water.

Table 29-2. Processing Solutions - Continued

Solution	Material	Make-up Quantity	Control Limits	Preparation of Solution
	Calcium or Magnesium Fluoride	2.8 g/L (0.37 oz/gal)	pH 4.1 – 5.5	2. Add the chemicals slowly while stirring the solution. 3. Stir to dissolve. 4. Fill tank to operating level with distilled water. 5. Stir to mix. 6. Heat to 93° – 100°C (200° – 212°F).
C-450 Galvanic Anodize Treatment	Ammonium Sulfate	30 g/L (4.0 oz/gal)	26 – 34 g/L (3.5 – 4.5 oz/gal)	1. Fill tank two-thirds full of distilled water.
	Sodium Dichromate	30 g/L (4.0 oz/gal)	26 – 34 g/L (3.5 – 4.5 oz/gal)	2. Add the ammonium sulfate and sodium dichromate slowly while stirring the solution.
	Ammonium Hydroxide	2.5 mL/l (0.32 fl oz/gal)	ph 5.6 – 6.0	3. Stir to dissolve. 4. Add the ammonium hydroxide. 5. Stir to dissolve. 6. Fill tank to operating level with distilled water. 7. Stir to mix. 8. Heat to 49° – 60°C (120° – 140°F).
C-451 Caustic Anodize	Sodium Hydroxide (commercially equivalent products under NSNs 6810-00-043-1458, 6810-00-043-1459, 6810-00-174-6581, 6810-00-264-9025, and 6810-00-270-8177)	225 g/L (30 oz/gal)	180 – 270 g/L (24 – 36 oz/gal)	1. Fill tank two-thirds full of distilled water.
	Ethylene or Diethylene Glycol	94 mL/l (12 fl oz/gal)	62 – 125 mL/l (8 – 16 fl oz/gal)	2. Add the sodium hydroxide and sodium oxalate slowly.
	Sodium Oxalate	2.5 g/L (0.33 oz/gal)		3. Stir to dissolve. 4. Add the glycol. 5. Fill to operating level with distilled water. 6. Stir to mix. 7. Heat to 74° – 79°C (165° – 176°F).
C-452 Neutralizing Solution	Sodium Dichromate	50 g/L (6.7 oz/gal)	45 – 53 g/L (6 – 7 oz/gal)	1. Fill tank two-thirds full of distilled water.

Table 29-2. Processing Solutions - Continued

Solution	Material	Make-up Quantity	Control Limits	Preparation of Solution
	Sodium Bifluoride	50 g/L (6.7 oz/gal)	45 – 53 g/L (6 – 7 oz/gal)	2. Add the chemicals slowly. 3. Stir to dissolve. 4. Fill tank to operating level with distilled water. 5. Stir to mix.
C-453	Chromium Trioxide (A-A-55827) Calcium Sulfate	10 g/L (1.33 oz/gal) 7.5 g/L (1 oz/gal)	8 – 11 g/L (1.1 – 1.5 oz/gal) pH 1.3 – 1.8	1. Fill tank two-thirds full of distilled water. 2. Add the chemicals slowly. 3. Stir to dissolve. 4. Fill tank to operating level with distilled water. 5. Stir to mix.
C-454 Fluoride Anodize	Ammonium Bifluoride	176 g/L (23.5 oz/gal)	143 – 300 g/L (19 – 28 oz/gal)	1. Fill tank two-thirds full of distilled water. 2. Slowly add the bifluoride. 3. Stir to dissolve. 4. Fill tank to operative level with distilled water. 5. Stir to mix. 6. Heat to 16° – 30°C (60° – 86°F).
C-455 Chromate Treatment	Iridite #15 or Equivalent Compound	As per vendor's recommendation.		1. Fill tank two-thirds full of distilled water. 2. Add chemicals as per vendor's instruction. 3. Stir to dissolve. 4. Fill tank to operating level with distilled water. 5. Stir to mix. 6. Heat to 24° – 30°C (75° – 100°F).
C-456 Chrome Pickle for Magnesium	Sodium Dichromate Nitric Acid (A-A-59105) Sodium, Potassium or Ammonium Bifluoride ($NaHF_2$ or NH_4HF_2)	180 g/L (24 oz/gal) 125 mL/l (16 fl oz/gal) 15 g/L (2 oz/gal)	165 – 195 g/L (22 – 26 oz/gal) 63 – 187 mL/l (8 – 24 fl oz/gal) 11 – 18 g/L (1.5 – 2.5 oz/gal)	1. Fill tank two-thirds full of distilled water. 2. Add the sodium dichromate while stirring the solution. 3. Add the bifluoride. Continue stirring. 4. Stir to dissolve. 5. Add the nitric acid slowly and cautiously.

Table 29-2. Processing Solutions - Continued

Solution	Material	Make-up Quantity	Control Limits	Preparation of Solution
				6. Fill tank to operating level with distilled water. 7. Stir to mix. 8. Heat to 21° – 60°C (70° – 140°F).
C-457 Blackener for Copper Alloys	Potassium Sulfide	7.5 g/L (1 oz/gal)	Make additions to maintain desired color of coating.	1. Fill tank three-fourths full of distilled water. 2. Add the potassium sulfide slowly while stirring the solution. 3. Fill tank to operating level with distilled water. 4. Mix solution thoroughly. 5. Heat to 60° – 66°C (140° – 150°F).
C-458 Blackener for Stainless Steel	Sodium Dichromate	100%	As required to maintain solution level.	1. Place sodium dichromate in container. 2. Place dry parts on sodium dichromate. 3. Heat sodium dichromate to molten stage.
C-459 Manganese Phosphate	Manganese [5]Phosphating (liquid) 6850-205-6478 or Manganese [5]Phosphating (powder) 6850-205-6782	66 g/L (8.8 oz/gal) 29 g/L (3.9 oz/gal) Total acid Free acid to total acid ratio Iron (ferrous)	24 – 27 points 4 points maximum [6] 1 – 6 minimum 1 – 6.5 optimum 0.2 – 0.4%	1. Fill the tank two-thirds full of tap water. 2. Heat to 54° – 71°C (130° – 160°F). 3. Add the proper amount of either the liquid or powder manganese phosphate material. 4. Mix the solution. 5. Carefully degrease 4 pounds of steel wool for each 100 gallons of solution and dry until free of solvent vapors. 6. Immerse the steel wool in the solution and allow it to dissolve. 7. Fill tank to operating level with tap water. Continue to add steel wool until the iron content of the solution is between 0.2 and 0.4%.

Table 29-2. Processing Solutions - Continued

Solution	Material	Make-up Quantity	Control Limits	Preparation of Solution
				8. Thoroughly mix solution. 9. Take sample and analyze the solution. Make additions if necessary. 10. Add 0.08 g/L (0.01 oz/gal) sodium nitrate to the solution and mix. 11. Heat to 90° – 100°C (194° – 210°F).
C-460 Zinc Phosphate	Zinc Phosphating Material (liquid) [7]	40 g/L (5.3 oz/gal) Total acid Free Acidity Free acid to total acid ratio Iron (ferrous) Nitrate	 24 – 27 points [6] 4 points maximum 1 – 6.0 minimum 1 – 6.5 optimum 0.3 – 0.5% 2.5% maximum	1. Fill the tank two-thirds full of tap water. 2. Heat the solution to 54° – 71°C (130° – 160°F). 3. Add the proper amount of zinc phosphate liquid. 4. Mix the solution. 5. Carefully degrease 4 lbs of steel wool for each 100 gallons of solution and dry until free of solvent vapors. 6. Immerse the steel wool in the solution and allow it to dissolve. Continue to add until the iron content of the solution is between 0.3 and 0.5%. 7. Fill the tank to operating level with tap water. 8. Thoroughly mix the solution. 9. Take samples and analyze the solution and make adjustments if necessary. 10. Add 0.08 g/L (0.01 oz/gal) sodium nitrate to the solution and mix the solution thoroughly. 11. Heat to 90° – 100°C (194° – 210°F).
C-461 Passivation for Stainless Steel Type II	Nitric Acid (A-A-59105) Sodium Dichromate (A-A-59123)	23% by volume 2.5% by wt	20 – 25% by volume —	1. Fill tank three-fourths full of distilled water. 2. Add the nitric acid slowly and cautiously. 3. Dissolve the sodium dichromate in a small amount of distilled water then add to solution.

Table 29-2. Processing Solutions - Continued

Solution	Material	Make-up Quantity	Control Limits	Preparation of Solution
				4. Fill tank to operating level with distilled water. 5. Stir to mix. 6. Heat to desired temperature.
C-462 Passivation for Stainless Steel Type IV	Nitric Acid (A-A-59105)	35% by volume	25 – 45% by volume —	1. Fill tank one-half full of distilled water. 2. Add the nitric acid slowly and cautiously. 3. Fill tank to operating level with distilled water. 4. Stir to mix. 5. Heat to desired temperature.
C-463 Zincate	Sodium Hydroxide Zinc Oxide Ferric Chloride Rochelle Salts Sodium Nitrate	120 g/L (16 oz/gal) 20.3 g/L (2.7 oz/gal) 2 g/L (0.27 oz/gal) 50 g/L (6.7 oz/gal) 0.98 g/L (0.13 oz/gal)	120 g/L (16 oz/gal) 20.3 g/L (2.7 oz/gal) Control by Baume Add chemicals in make-up ratio if Baume is low. Add water if Baume is high.	1. Fill tank one-half full of distilled water. 2. Add the sodium hydroxide slowly. 3. Stir to dissolve. 4. Add the zinc oxide. 5. Stir to dissolve. 6. Fill the tank to near operating level. 7. Mix solution thoroughly. 8. Add the ferric chloride. 9. Add the Rochelle Salts. 10. Add the sodium nitrate. 11. Fill tank to operating level with distilled water. 12. Mix solution thoroughly. 13. Operating temperature: 21° – 24°C (70° – 75°F).
C-464 Hard Anodize	Sulfuric Acid Oxalic Acid	250 g/L (33 oz/gal) 11.2 g/L (1.5 oz/gal)	225 – 270 g/L (30 – 36 oz/gal) 10.5 – 12 g/L (1.4 – 1.6 oz/gal)	1. Fill tank two-thirds full of distilled water. 2. Slowly and cautiously add the sulfuric acid while stirring the solution. 3. Slowly add the oxalic acid. 4. Fill tank to operating level with distilled water.

Table 29-2. Processing Solutions - Continued

Solution	Material	Make-up Quantity	Control Limits	Preparation of Solution
				5. Thoroughly mix solution. 6. Operating temperature: 0° – 4°C (32° – 39°F).
C-465 Tin Plating Solution	Potassium Stannate	160 g/L (21 oz/gal)	105 – 210 g/L (14 – 28 oz/gal)	1. Fill tank two-thirds full of distilled water.
	Tin Metal		40 – 80 g/L (5.3 – 10.6 oz/gal)	2. Add the potassium hydroxide slowly while agitating the solution.
	Potassium Hydroxide	30 g/L (4 oz/gal)	15 – 60 g/L (2 – 8 oz/gal)	3. Heat solution to about 77°C (170°F). 4. Slowly add the potassium stannate. Continue agitation.
	NOTE • Tin removed by deposition may be replaced using a hydrous tin oxide solution. • Do not stir the solution during the plating operation. • Use stainless steel anodes.			5 Fill tank to operating level with distilled water. 6. Mix solution thoroughly. 7. Heat to 77° – 88°C (170° – 190°F).
C-466 Passivation Solution for Ferritic and Martinsitic Steel	Sodium Dichromate (A-A-59123)	52.5 g/L (7.0 oz/gal)	40 – 60 g/L (5.4 – 8 oz/gal)	1. Fill tank near operating level, with distilled water. 2. Add the sodium dichromate slowly. 3. Fill tank to operating level with distilled water. 4. Stir to mix. 5. Heat to 60° – 71°C (140° – 160°F).
C-467 Nickel Sulfamate Strike	Nickel Sulfamate Plating Solution (BARRETT SNR)	50% by volume		1. Fill tank one-half full of Barrett's SNR. 2. Fill tank to near operating level with distilled water.
	Nickel Metal		75 – 90 g/L (10 – 12 oz/gal)	3. Add the boric acid while stirring the solution.
	Boric Acid	30 g/L (4 oz/gal)	26 – 34 g/L (3.5 – 4.5 oz/gal)	4. Add the Barrett's SNAC continue stirring solution.
	Nickel Sulfamate Acid Compound (BARRETT SNAC)	20 g/L (2.7 oz/gal)		5. Add the hydrochloric acid slowly while stirring the solution.
	Hydrochloric Acid	12 mL/l (1.54 fl oz/gal)	10 – 13 mL/l (1.28 – 1.66 fl oz/gal)	6. Fill to operating level with distilled water.

Table 29-2. Processing Solutions - Continued

Solution	Material	Make-up Quantity	Control Limits	Preparation of Solution
	ph **NOTE** Barrett products are obtained from Allied-Kelite.		1.5 max	
C-468 Rochelle Salt Solution	Rochelle Salt Distilled or Deionized Water	50 g/L of solution (2.1 lbs/5 gal)	[8] [8]	1. Fill tank to near operating volume with distilled or deionized water. 2. Add required amount of Rochelle Salt. 3. Fill to operating level with water. 4. Stir to mix.
C-469 Copper Sulfate Strike Solution	Copper Sulfate, Reagent Grade Sodium Hydroxide Rochelle Salt Distilled or Deionized Water Copper Metal	52 g/L (7 oz/gal) 52 g/L (7 oz/gal) 180 g/L (24 oz/gal)	112 – 202 g/L (15 – 27 oz/gal) 7 – 15 g/L (1.0 – 2.0 oz/gal)	1. Fill tank to near operating volume with distilled or deionized water. 2. Add required amount of sodium hydroxide. 3. Stir to dissolve. 4. Add required amount of Rochelle Salt. 5. Stir to dissolve. 6. Add required amount of copper sulfate. 7. Fill to operating level with distilled water. 8. Heat to 49° ± 3°C (120° ± 5°F) and stir until all salts are dissolved.
	WARNING Prevent contact with skin or eyes and avoid breathing vapors. Keep container closed. Use only with adequate ventilation. Wear chemical safety goggles and rubber gloves while handling. In case of contact, immediately flush skin or eyes with water for 15 minutes and get medical attention.			
C-470 Titanium Anodizing Solution	Trisodium Phosphate	97 g/L of solution (13 oz/gal)		1. Fill 50% of operating volume with distilled or deionized water.

Table 29-2. Processing Solutions - Continued

Solution	Material	Make-up Quantity	Control Limits	Preparation of Solution
	Phosphoric Acid	48 mL/l of solution (6.1 fl oz/gal)		2. Add required amount of trisodium phosphate. Stir until completely dissolved.
	Ammonium Hydroxide	70 mL/l of solution (8.9 fl oz/gal)		3. Add required amount of phosphoric acid. Stir until completely mixed.
	Distilled or Deionized Water			4. Cautiously add required amount of ammonium hydroxide. Stir until completely mixed.
	Chloride	0.085 g/L maximum (0.32 g/gal maximum)		5. Add distilled or deionized water to final volume.
		pH 7.0 – 8.0 (maintain with additions of phosphoric acid or ammonium hydroxide as required.		
C-471 Nickel Glycolomate Strike	Nickel	65 g/L (8.7 oz/gal)	60 – 70 g/L	1. Fill tank to near operating level with distilled water.
	Boric Acid	45 g/L (6.0 oz/gal)	40 – 50 g/L	2. Add boric acid while stirring the solution.
	Glycolic Acid (70%)	60 mL/l (8.0 oz/gal)	55 – 65 mL/l	3. Add the proper amount of glycolic acid and continue stirring.
	Saccharin	1.5 g/L (0.20 oz/gal)	1.3 – 1.7 g/L	4. Add proper amount of saccharin and continue stirring.
	Sodium Acetate	50 g/L (6.0 oz/gal)	45 – 55 g/L	5. Add proper amount of sodium acetate and continue stirring.
	Wetting Agent	0.005 g/L (0.0007 oz/gal)	10% max	6. Add wetting agent, stirring carefully.
			Ph 5.0 – 6.0	7. Fill to operating level with distilled water.
C-472 Copper Strike	Cuprous Cyanide	40 g/L (5.2 oz/gal)	CU (metal) 15 – 30 g/L (2 – 4 oz/gal)	1. Fill tank one-half full with water.
	Sodium Cyanide	50 g/L (6.5 oz/gal)	Free Sodium Cyanide 3.8 – 19 g/L (0.5 – 2.5 oz/gal)	2. Heat to 38° – 54°C (100° – 130°F).
	Sodium Carbonate	30 g/L (3.9 oz/gal)	30 – 60 g/L (4 – 8 oz/gal)	3. Add sodium carbonate slowly while agitating solution.

Table 29-2. Processing Solutions - Continued

Solution	Material	Make-up Quantity	Control Limits	Preparation of Solution
	Rochelle Salts	60 g/L (7.8 oz/gal)	45 – 75 g/L (6 – 10 oz/gal)	4. Add sodium cyanide slowly and cautiously continuing agitation. 5. Add cuprous cyanide slowly and cautiously continuing agitation. 6. Add Rochelle Salts slowly continuing agitation. 7. Fill to operating level with water. 8. Stir to mix. 9. Heat to 38° – 54°C (100° – 130°F). 10. Filter continuously.
C-473 Aluminum Alkaline Etch	Sodium Hydroxide	37 g/L (5 oz/gal)	30 – 45 g/L (4 – 6 oz/gal)	1. Fill tank two-thirds full of tap water. 2. Add the sodium hydroxide slowly and cautiously while agitating solution.
Any proprietary solution meeting requirements of MIL-A-8625 may be substituted.	Sodium Gluconate (or equivalent proprietary additive)	0.2 g/L (0.03 oz/gal)	Add (as alumina builds up) to max of 2 g/L (0.3 oz/gal)	3. Add the trisodium phosphate similarly. 4. Add the additive. 5. Fill to operating level with water.
	Trisodium Phosphate (optional ingredient)	23 g/L (3 oz/gal)	15 – 30 g/L (2 – 4 oz/gal)	6. Use continuous agitation.
C-474 Boric Acid/Sulfuric Acid Anodizing Solution	Sulfuric Acid (A-A-55828, Type I, Class 1)	45 g/L (6 oz/gal)	30.5 – 52.0 g/L (4 – 7 oz/gal)	1. Fill tank one-half full of deionized water.
	Boric Acid, Technical Grade	8 g/L (1 oz/gal)	5.2 – 10.7 g/L (0.7 – 1.4 oz/gal)	2. Turn on agitation and cooling system. 3. Slowly and cautiously add the sulfuric acid.
	Discard or purify the solution when the aluminum or chloride concentration exceeds the following: 2.6 g/L maximum as A1 0.1 g/L maximum as NaC1			4. Keep the temperature of the solution below 66°C (150°F). 5. Add boric acid.
C-475 Dilute Chromate Seal Solution	Chromium Trioxide (A-A-55827)	26 g/100 gal	See below.	1. Fill tank two-thirds full of deionized water.

Table 29-2. Processing Solutions - Continued

Solution	Material	Make-up Quantity	Control Limits	Preparation of Solution
	Sodium Chromate (commercially equivalent products under NSN 6810-00-240-2119)	26 g/100 gal	See below.	2. Turn on agitation. 3. Slowly add the chromium trioxide. 4. Slowly add the sodium chromate.
	Maintain the pH and Cr^{+6} by adding chromic acid, sodium chromate, or sodium hydroxide. Discard or purify the solution when the silicates or dissolved solids (TDS) exceed the limits provided below or when there is visible sediment. pH – 3.2 – 3.8 Cr^{+6} – 45 ppm minimum SiO_2 – 10 ppm maximum TDS – 250 ppm maximum			5. Heat to 88° – 93°C (190° – 200°F).

[1] Any approved proprietary solution which meets the requirements of SAE AMS-C-26074 may be substituted for this solution.
[2] Titan paste is procured from Delta Processes, Inc., Seattle, Washington.
[3] Any solution providing a coating meeting the requirements of SAE AMS-QQ-P-416, Type II may be substituted.
[4] Any proprietary solution meeting the requirements of MIL-DTL-81706 may be substituted.
[5] Any approved proprietary solution meeting the requirements of Specification A-A-59267 may be substituted for this solution.
[6] 1 point equals 1 mL of 0.1N sodium hydroxide (NaOH) per 10 mL sample of solution.
[7] Any approved proprietary solution meeting the requirements of Specification A-A-59267 may be substituted for this solution.
[8] No additions to this solution are permitted.

29.5 SOLUTION TEST METHODS.

Table 29-3. Test Methods

Paragraph No.	Title
29.6	Acid Determination
29.7	Fluoboric Acid Determination
29.8	Nitric – Sulfuric Acid Strip
29.9	Chromic Acid Determination
29.10	Sulfuric Acid Determination
29.11	Acid Determination
29.12	Acid Salt Determination
29.13	Sodium Cyanide Determination
29.14	Sodium Hydroxide Determination
29.15	Free Sodium Cyanide Determination
29.16	Free Cyanide
29.17	Carbonates

Table 29-3. Test Methods - Continued

Paragraph No.	Title
29.18	Metallic Copper
29.19	Metallic Zinc
29.20	Rochelle Salt or ROCHELTEX
29.21	Hydroxide Determination
29.22	Metallic Tin Determination
29.23	Metallic Cadmium
29.24	Total and Free Cyanide
29.25	Carbonate
29.26	Caustic Content
29.27	Physical Tests
29.28	Chromic Acid
29.29	Sulfate
29.30	Trivalent Chromium
29.31	Iron
29.32	Chloride Determination
29.33	Copper Determination
29.34	Physical Tests
29.35	Determination of Cadmium Using Ethylene Diamine Tetra-Cetic Acid (EDTA)
29.36	Determination of Total Cyanide
29.37	Determination of Caustic Soda
29.38	Determination of Carbonate
29.39	Determination of Titanium in Solution (Colormetric)
29.40	Determination of Titanium Content of Deposit
29.41	Preparation of Colormetric Titanium Standards
29.42	Determination of Iron Content
29.43	Nickel Content Determination
29.44	Chloride Determination
29.45	Chromic Acid Determination
29.46	Cyanide Determination
29.47	Alkaline Determination
29.48	Copper Metal Determination
29.49	Free Cyanide Determination
29.50	Hydroxide Determination
29.51	Carbonate Determination
29.52	Specific Gravity
29.53	pH Determination
29.54	Metallic Silver
29.55	Free Potassium Cyanide
29.56	Potassium Carbonate Determination
29.57	Potassium Hydroxide Determination
29.58	Physical Tests
29.59	Alkalinity Determination
29.60	Sodium Stannate Determination

Table 29-3. Test Methods - Continued

Paragraph No.	Title
29.61	Total and Free Caustic Soda
29.62	Physical Test
29.63	Free Cyanide Determination
29.64	Metallic Lead Determination
29.65	Free Fluoboric Acid
29.66	Physical Tests
29.67	Metallic Lead Determination
29.68	Metallic Antimony Determination
29.69	Metallic Tin Determination
29.70	Free Fluoboric Acid
29.71	Zinc Metal Determination
29.72	Free Sodium Cyanide Determination
29.73	Sodium Hydroxide Determination
29.74	Sodium Carbonate Determination
29.75	Physical Tests
29.76	Gold Metal Determination
29.77	Free Potassium Cyanide Determination
29.78	Potassium Carbonate Determination
29.79	Physical Tests
29.80	Rhodium Metal Determination
29.81	Sulfuric Acid Determination
29.82	Physical Tests
29.83	Indium Metal Determination
29.84	Sulfate Determination
29.85	Nickel Metal Determination
29.86	Chloride Determination
29.87	Boric Acid Determination
29.88	Physical Tests
29.89	Sodium Hydroxide and Trisodium Phosphate
29.90	Total Alkalinity and Sodium Hydroxide
29.91	Trisodium Phosphate and Sodium Carbonate
29.92	Sodium Hydroxide, Trisodium Phosphate, and Sodium Cyanide
29.93	Sodium Cyanide
29.94	Metallic Copper Determination
29.95	Sulfuric Acid Determination
29.96	Metallic Tin Determination
29.97	Free Fluoboric Acid
29.98	Iridite 8P Determination
29.99	Alkaline Cleaner (A-A-59260) Determination
29.100	Aluminum Alloy Etchant Determination
29.101	Free Acid Determination
29.102	Phosphate Determination
29.103	Iron Determination

Table 29-3. Test Methods - Continued

Paragraph No.	Title
29.104	Nitrate Determination
29.105	Free Acid Determination
29.106	Nitrate Determination
29.107	Titanium Determination
29.108	Surface Tension Determination
29.109	Sodium, Potassium, or Ammonium Bifluoride Determination
29.110	Chromic Acid Anodize Determination
29.111	Sulfuric Anodize Determination
29.112	Oxalic Acid Determination
29.113	Free Acid as Sulfuric Acid Determination
29.114	Estimation of Aluminum
29.115	Sodium Dichromate Determination
29.116	Nitric Acid Determination
29.117	Potassium Bifluoride
29.118	Chromic Acid Pickle Determination
29.119	Iridite #15 Determination
29.120	Hydrochloric Acid Determination
29.121	Free and Total Acid Determination
29.122	Iron Determination
29.123	Manganese Determination
29.124	Zinc Determination
29.125	Nitrate Determination
29.126	Physical Test
29.127	Solution Concentration
29.128	Physical Test
29.129	SC-590 Determination
29.130	Sulfuric Acid Determination
29.131	Sodium Hydroxide, Trisodium Phosphate, and Sodium Carbonate Determination
29.132	Tin Determination
29.133	Free Potassium Hydroxide Determination
29.134	Boric Acid Determination
29.135	Hydrochloric Acid Determination
29.136	Phosphoric Acid Determination
29.137	Phosphoric Acid Determination (Optional AAS Method)
29.138	Sulfuric Acid and Ammonium Bifluoride Determination
29.139	Potassium Hydroxide Determination
29.140	Isoprep 184 Determination
29.141	Boric Acid/Sulfuric Acid Determination
29.142	Aluminum Determination
29.143	Chloride Determination (Preferred)
29.144	Chloride Determination (Alternate)
29.145	Chloride Determination (Second Alternate)
29.146	Physical Tests

Table 29-3. Test Methods - Continued

Paragraph No.	Title
29.147	Hexavalent Chromium Determination
29.148	Silicate Determination
29.149	Total Dissolved Solids Determination
29.150	Preparation and Standardization Procedures for Volumetric Solutions
29.151	Preparation of Nonstandard Solutions
29.152	Preparation of Indicator Solutions

TEST METHOD 1 — ACID SOLUTIONS

29.6 ACID DETERMINATION.

a. Procedure.

(1) Pipet a 5 mL sample into a 250-mL Erlenmeyer flask.

(2) Dilute to approximately 100 mL with distilled water.

(3) Add 2 – 3 drops of phenolphthalein.

(4) Titrate with N sodium hydroxide to a faint pink color.

(5) Record cubic centimeters of sodium hydroxide used.

b. Calculation:

Percent HCl (20° Baume) by volume = mL (NaOH) x N(NaOH) x 1.96

Percent HF (60%) by volume = mL (NaOH) x N(NaOH) x 0.46

Percent HNO_3 (42° Baume) by volume = mL (NaOH) x N(NaOH) x 1.2

Percent H_3PO_4 (75% by weight) by volume = mL (NaOH) x N(NaOH) x 10.35

Percent H_2SO_4 (S.p. 1.84) = mL (NaOH) x N(NaOH) x 0.56

29.7 FLUOBORIC ACID DETERMINATION.

a. Procedure.

(1) Pipet a 2 mL sample into a 250-mL Erlenmeyer flask.

(2) Add 80 mL of distilled water.

(3) Add several drops of methyl orange indicator solution.

(4) Titrate with 1N sodium hydroxide to a yellow end-point.

b. Calculation:

Free fluoboric acid (g/L) = mL (NaOH) x N(NaOH) x 43.88

29.8 NITRIC-SULFURIC ACID STRIP.

a. Procedure.

(1) Pipet a 5 mL sample of original solution into a 250-mL Erlenmeyer flask.

(2) Add approximately 80 mL of distilled water and 2 – 3 drops of phenolphthalein indicator.

(3) Titrate with 1.0N sodium hydroxide (NaOH) to a permanent faint pink end-point.

(4) Record cubic centimeters of NaOH used.

(5) Pipet a 5 mL sample of original solution into a 400-mL beaker.

(6) Add 200 mL of distilled water and 5 mL of concentrated hydrochloric acid.

(7) Boil solution for approximately 10 minutes.

(8) Add 10 mL of 10% barium chloride.

(9) Boil 2 – 3 more minutes.

(10) Remove from hot plate and allow to stand several hours.

(11) Add 10% barium chloride dropwise until no more precipitate is formed.

(12) Filter through a weighed fine fritted glass crucible, wash the precipitate well with hot water.

(13) Dry in oven for 2 hours at 93° – 121°C (200° – 250°F).

(14) Desiccate and allow to cool.

(15) Weigh crucible and precipitate.

b. Calculation:

$$\text{Normality (total acid)} = \frac{\text{mL (1N NaOH used)}}{5}$$

Normality (sulfuric acid) = grams of ppt ($BaSO_4$) x 1.71

Normality (nitric acid) = Normality (total acid) – Normality (sulfuric acid)

% of nitric acid (HNO_3) = N(HNO_3) x 6.56

% of sulfuric acid (H_2SO_4) = N(H_2SO_4) x 2.88

TEST METHOD 2 — CHROMIC ACID ETCH SOLUTION

29.9 CHROMIC ACID DETERMINATION.

a. Procedure.

(1) Pipet a 5 mL sample into a 250-mL volumetric flask and dilute to mark with distilled water.

(2) Pipet a 5 mL aliguot into a 250-mL Erlenmeyer flask.

(3) Add approximately 100 mL of distilled water.

(4) Add 1 gram of ammonium bifluoride.

(5) Add 10 mL of 1:1 sulfuric acid.

(6) Titrate with standard 0.1N sodium thiosulfate solution to a light yellow-green color.

(7) Add 3 – 5 mL of starch indicator and continue titration to a clear pale green end-point.

b. Calculation:

Chromic acid (g/L) – mL ($Na_2S_2O_3$) x N($Na_2S_2O_3$) x 333

TEST METHOD 3 — SULFURIC-HYDROFLUORIC ACID

29.10 SULFURIC ACID DETERMINATION.

a. Procedure.

(1) Pipet a 5 mL sample into a 250-mL Erlenmeyer flask.

(2) Add 80 mL of distilled water.

(3) Add 2 – 3 drops of phenolphthalein indicator.

(4) Titrate with 0.5N sodium hydroxide to a permanent faint pink end-point.

b. Calculation:

Sulfuric acid (%) = mL (0.5N NaOH) x 0.28

NOTE

Add acids in same proportions as for make-up.

TEST METHOD 4 — NITRIC-HYDROFLUORIC ACID ETCH

29.11 ACID DETERMINATION.

a. Procedure.

(1) Measure 15 mL of saturated silica gel into a 250-mL Erlenmeyer flask.

(2) Pipet 5 mL of sample into flask.

(3) Add 20 mL of ethyl alcohol and 2 – 3 drops of phenolphthalein indicator to contents of flask.

(4) Titrate with 1N potassium hydroxide (KOH) to the appearance of a pink shade. The color will fade quickly. Let this volume be A mL.

(5) Add 20 mL of distilled water to the flask and raise to boiling (use boiling chips to prevent bumping).

(6) Titrate immediately with 1N KOH to the pink end-point. This time the color is more persistent. Let this volume be B mL.

b. Calculation:

A mL x N(KOH) = A

B mL x N(KOH) = B

$$\text{Nitric acid (g/L)} = (A - \frac{B}{2}) \times 12.68$$

Hydrofluoric acid (g/L) = (B x 1.5) x 4.02

TEST METHOD 5 — DRY ACID SALTS (METEX M-629)

29.12 ACID SALT DETERMINATION.

a. Procedure.

(1) Pipet 5 mL of sample into a 250-mL Erlenmeyer flask.

(2) Add approximately 80 mL of distilled water.

(3) Add 5 – 10 drops of bromo-cresol green indicator.

(4) Titrate with 1N sodium hydroxide until the solution turns to a blue-green color.

b. Calculation:

M-629 (g/L) = mL (NaOH) x N(NaOH) x 14.55

TEST METHOD 6 — SILVER STRIP SOLUTION

29.13 SODIUM CYANIDE DETERMINATION.

a. Procedure.

(1) Pipet a 2 mL sample into a 250-mL Erlenmeyer flask.

(2) Add approximately 80 mL of distilled water.

(3) Add 5 mL of 20% KI indicator.

(4) Titrate with 0.1N silver nitrate to a faint permanent yellow turbidity.

b. Calculation:

Sodium cyanide (g/L) – mL ($AgNO_3$) x 4.91

TEST METHOD 7 — CHROMIUM STRIP SOLUTION

29.14 SODIUM HYDROXIDE DETERMINATION.

a. Procedure.

(1) Pipet a 5 mL sample into a 250-mL Erlenmeyer flask.

(2) Add approximately 80 mL distilled water.

(3) Add 2 – 3 drops of phenolphthalein indicator.

(4) Titrate with 0.1N sulfuric acid to a clear endpoint.

b. Calculation:

Sodium hydroxide (g/L) = mL (H_2 SO_4) x 7.09

TEST METHOD 8 — MULTIDEPOSIT STRIP SOLUTION

29.15 FREE SODIUM CYANIDE DETERMINATION.

a. Procedure.

(1) Pipet a 5 mL sample into a 250-mL Erlenmeyer flask.

(2) Add approximately 80 mL of distilled water.

(3) Add 10 mL of potassium iodide solution.

(4) Titrate with 0.1 silver nitrate until a faint permanent yellow turbidity.

b. Calculation:

Free sodium cyanide (g/L) = mL ($AgNO_3$) x 1.97

TEST METHOD 9 — BRASS PLATING SOLUTION

29.16 FREE CYANIDE.

a. Procedure.

(1) Pipet a 10 mL sample into a 250-mL Erlenmeyer flask.

(2) Add approximately 80 mL of distilled water.

(3) Add 5 mL of 10% potassium iodine (KI) solution.

(4) Titrate with 0.1N silver nitrate ($AgNO_3$) solution to a faint yellow turbidity.

b. Calculation:

Free sodium cyanide (g/L) – mL ($AgNO_3$) x N($AgNO_3$) x 9.83

Free potassium cyanide (g/L) = mL ($AgNO_3$) x 13.05

29.17 CARBONATES.

a. Procedure.

(1) Pipet a 10 mL sample into a 250-mL beaker.

(2) Add approximately 80 mL of distilled water and warm solution.

(3) Add l0% barium nitrate Ba(NO_3)2 solution while stirring, until no more precipitate forms. Allow to settle.

(4) Filter, adding a few drops of $Ba(NO_3)2$ to the first portion of filtrate to determine whether precipitation is complete.

(5) Wash precipitate with hot water.

(6) Transfer the filter paper and precipitate to the original beaker.

(7) Add 50 mL of distilled water.

(8) Add 4 – 5 drops of methyl orange indicator.

(9) Titrate with 1.0N hydrochloric acid to a faint permanent pink end-point.

b. Calculation:

Sodium carbonate (g/L) = mL (HCl) x N(HCl) x 5.3
Potassium carbonate (g/L) = mL (HCl) x N(HCl) x 6.94

29.18 METALLIC COPPER.

a. Procedure.

(1) Pipet a 1 mL sample into a 250-mL Erlenmeyer flask.

(2) Under a hood, add 20 mL of concentrated hydrochloric acid. When fuming starts, add ½ gram of ammonium persulfate and heat to near dryness.

(3) Remove from heat and cool.

(4) Cautiously add approximately 80 mL of distilled water.

(5) Add dropwise 1:1 ammonium hydroxide to the first permanent color change. A deep blue color should persist. Too much ammonia will obscure end-point.

(6) Add ½ gram of murexide indicator.

(7) Titrate with standard EDTA solution to a purple end-point.

b. Calculation:

Metallic copper (g/L) = mL (EDTA) x 3.23
Metallic copper (g/L) = grams Cu x 100.5

29.18.1 Metric Copper Alternate Method.

a. Procedure.

(1) Pipet a 10 mL sample into a 250-mL beaker.

(2) Under a hood, add 10 mL of concentrated sulfuric acid and 5 mL of nitric acid.

(3) Cover beaker and boil to slight sulfurous fumes.

(4) If solution turns black, repeat with small additions of nitric acid until clear.

(5) Dilute to 150 mL with distilled water.

(6) Add 5 grams of urea.

(7) Plate at 1 – 3 amps for 1 hour.

b. Not applicable.

29.19 METALLIC ZINC.

a. Procedure.

(1) Pipet a 2 mL sample into a 250-mL Erlenmeyer flask.

(2) Add approximately 80 mL of distilled water.

(3) Add 10 mL concentrated ammonium hydroxide (NH_4OH).

(4) Add Eriochrome Black T indicator mixture to produce a deep color. Stir until dissolved.

(5) Add 10 mL of formaldehyde solution.

(6) Titrate immediately with standard 0.0575 M EDTA (disodium salt of ethylene diamine tetra-acetic acid) solution until color changes from red to brown or blue.

b. Calculation:

Metallic zinc (g/L) = mL (EDTA) x 1.88

29.20 ROCHELLE SALT OR ROCHELTEX.

a. Procedure.

(1) Pipet duplicate 1 mL samples into 2 500-mL flasks. Add 75 mL water and 25 mL H_2SO_4.

(2) Add glass beads and boil gently until residue dissolves (30 minutes – 1 hour). Maintain solution in flask at a constant level by washing down sides of flask with water from time to time. This also keeps precipitate from clinging to walls of flask.

(3) Remove from hot plate, cool to room temperature. Add 1 – 2 drops of O-phenanthroline indicator and titrate with 0.1N ceric sulfate solution until color changes from orange or pale rose to colorless. Add ceric sulfate solution dropwise as only a few drops are required.

(4) Pipet 25 mL ceric sulfate solution into flask and add water until solution level is about 1½ inches

from bottom of the flask. Boil gently for 30 minutes – 1 hour. (Be careful, solution superheats.) If, while boiling, the solution changes from yellow to colorless, pipet an additional 25 mL ceric sulfate solution into the flask.

(5) Remove from hot plate and cool to room temperature. Add 1 drop O-phenanthroline indicator and titrate with 0.1N ferrous ammonium sulfate solution until color changes from yellow through colorless to the orange or pale rose end-point.

(6) Run duplicate blanks simultaneously with samples.

(a) Add 25 mL H_2SO_4 to 75 mL water in 500-mL flasks.

(b) Follow the procedure from Steps (1) through (5).

b. Calculation:

$$\text{Rochelle Salt (g/L)} = \frac{A - B}{A} \times N \times 982.5 \times \frac{C}{25}$$

Where:

A = mL ferrous ammonium sulfate required to titrate blank

B = mL ferrous ammonium sulfate required to titrate sample

C = ceric sulfate used in sample

N = normality of ceric sulfate

29.21 HYDROXIDE DETERMINATION.

a. Procedure.

(1) Pipet a 10 mL sample into a 250-mL Erlenmeyer flask.

(2) Add 25 mL of distilled water.

(3) Add 5 – 7 drops of La Motte sulfo-orange indicator solution.

(4) Titrate with 0.1N hydrochloric acid to a yellow end-point.

b. Calculation:

Sodium hydroxide (g/L) = mL (HCl used) x N(HCl) x 4.01

Potassium hydroxide (g/L) = mL (HCl used) x N(HCl) x 5.62

29.22 METALLIC TIN DETERMINATION.

a. Procedure.

(1) Pipet a 10 mL sample into 500-mL Erlenmeyer flask.

(2) Add 120 mL of distilled water.

(3) Add 60 mL of concentrated hydrochloric acid.

(4) Add 1 gram of antimony powder.

(5) Boil for 15 – 20 minutes and insert a stopper with tube. Place lower end of tube into a 300-mL beaker which contains 200 – 250 mL of saturated sodium bicarbonate solution.

(6) Cool in water bath.

(7) Remove stopper and add 5 mL of starch indicator solution.

(8) Immediately titrate with 0.1N potassium iodine (KI) solution to a permanent blue end-point.

b. Calculation:

Tin (g/L) = mL (KI used) x 0.596

TEST METHOD 10 — CADMIUM PLATING SOLUTION

29.23 METALLIC CADMIUM.

a. Procedure.

(1) Pipet a 2 mL sample into a 250-mL Erlenmeyer flask.

(2) Add 80 mL of distilled water.

(3) Under a hood, add HCl (25%) until a faint white precipitate is produced.

NOTE

If no precipitate appears, as may happen with a new bath, prepare 2 new samples and add 2 drops of thymolpthalein indicator and determine the amount of acid necessary to change the solution from blue to colorless. Discard this sample and add the same amount of acid to the second sample and proceed.

(4) Add 10 mL concentrated ammonium hydroxide (NH_4OH).

(5) Add 0.2 grams of Eriochrome Black T indicator mix (a deep blue color will result).

(6) Add 10 mL of (8%) formaldehyde solution. (A red to lavender color will occur.)

(7) Titrate immediately with 0.0575 M EDTA to a blue end-point.

b. Calculation:

Metallic cadmium (g/L) = mL (EDTA) x 3.24

29.23.1 Metallic Cadmium (Alternate Method).

a. Procedure.

(1) Pipet a 10 mL sample into a 250-mL beaker.

(2) Add 3 grams of sodium cyanide.

(3) Add 150 mL of distilled water.

(4) Plate at 2 – 3 amps on weighed platinum electrodes for 30 minutes, then raise to 6 amps until all the cadmium is removed.

b. Calculation:

Cadmium (g/L) = wt in grams (cd) x 100.5

NOTE

The Alternate Method is to be used when no fume hood is available to dissipate the hydrogen cyanide gas produced during the normal test procedure.

29.23.2 Metallic Cadmium (Alternate Method, No Fume Hood).

CAUTION

The pH 10 buffer shall be prepared and made ready prior to beginning the Alternate Method testing procedure.

a. Procedure:

(1) Pipette a 2 mL sample of the plating solution under test into a 300 mL Erlenmeyer flask.

(2) Add distilled or demineralized water for volume (between 50 to 80 mL).

(3) Add 10 mL of prepared pH 10 Buffer. To prepare a one (1) liter pH 10 Buffer Solution:

(a) Measure 625 mL of distilled or demineralized water into a 1500 mL beaker.

(b) Add 55 grams of Ammonium Chloride (NH_4Cl) and stir until dissolved.

(c) Then add 350 mL Ammonium Hydroxide (NH_4OH; specific gravity = 0.88 g/mL) and swirl to mix.

NOTE

Be careful to use the Eriochrome Black ‘‘T’’ Mix. Do not use the Eriochrome Black ‘‘T’’ Concentrate, as it will produce a color too intense to titrate.

(4) Add 0.2 grams of Eriochrome Black ‘‘T’’ mix.

(5) Add 20 mL of 8% formaldehyde solution.

(6) Immediately titrate with 0.0575 M EDTA solution to a clear blue end point.

b. Cadmium (g/L) = mL 0.0575 M EDTA used x 3.24.

29.24 TOTAL AND FREE CYANIDE.

a. Procedure.

(1) Pipet a 5 mL sample into a 250-mL Erlenmeyer flask.

(2) Add 80 mL of distilled water.

(3) Add 5 mL of (10%) potassium iodide (KI) solution.

(4) Add 15 mL of ammonia hydroxide (NH_4 OH).

(5) Titrate immediately with 0.1 silver nitrate ($AgNO_3$) to a faint permanent yellow turbidity.

b. Calculation:

Total sodium cyanide (NaCN) g/L = mL ($AgNO_3$) x N ($AgNO_3$) x 19.6

Free sodium cyanide (NaCN) g/L = total NaCN(g/L) – (g/L metallic cadmium x 13.05)

29.25 CARBONATE.

a. Procedure.

(1) Pipet a 10 mL sample into a 250-mL beaker.

(2) Add 80 mL of distilled water.

(3) Heat to 43° – 60°C (110° – 140°F).

(4) Add 10% barium chloride solution while stirring until no more precipitate forms.

(5) Filter and add a few more drops of barium chloride to the first portion of the filtrate to determine if precipitation is complete.

(6) Wash precipitate with hot water.

(7) Transfer the filter paper and precipitate to the original beaker.

(8) Add 50 mL of hot water.

(9) Add 2 – 3 drops of methyl orange indicator.

(10) Titrate with 0.5N HCl to a faint permanent pink end-point.

b. Calculation:

Sodium carbonate (g/L) = mL (HCl) x N(HCl) x 5.3

Potassium carbonate (g/L) = mL (HCl) x N(HCl) x 6.94

29.25.1 Sodium Carbonate Determination (Alternate Method).

a. Procedure.

(1) Pipet a 2 mL sample of solution into a 250-mL Erlenmeyer flask.

(2) Add approximately 100 mL of distilled water.

(3) Heat to 60°C (140°F).

(4) Add 10 mL of 10% barium chloride solution.

(5) Stopper flask lightly and allow precipitate to settle.

(6) Add 1 mL of 10% barium chloride solution.

(7) Continue adding 5 mL portions of barium chloride until no more precipitate forms.

(8) Filter and add a few drops of barium chloride to the first portion of the filtrate to determine if precipitation is complete.

(9) Wash flask and precipitate at least 3 times with hot water.

(10) Transfer filter paper and precipitate to original flask.

(11) Add 50 mL of distilled water and 2 – 3 drops of bromo-cresol green-methyl red indicator solution.

(12) Titrate with standard hydrochloric acid (HCl) to the end-point. Record mL of HCl used.

(13) Boil solution several minutes to expel the carbon dioxide.

(14) Cool solution.

(15) Boil titrate with standard sodium hydroxide to the end-point.

b. Calculation:

Sodium carbonate (g/L) = [mL (HCl used) x N(HCl)] – [mL ((NaOH) used) x N(NaOH)] x 26.48

Potassium Carbonate (g/L) = [mL (HCl) x N(HCl)] – [mL (NaOH) x N(NaOH)] x 34.7

29.26 CAUSTIC CONTENT.

a. Procedure.

(1) Pipet a 10 mL sample into a 250-mL Erlenmeyer flask.

(2) Add 80 mL of distilled water.

(3) Add 10 mL of caustic indicator solution.

(4) Titrate with 0.94N sulfuric acid (H_2 SO_4) to a faint yellow end.

b. Calculation:

Sodium hydroxide (g/L) = mL (H_2 SO_4) x N (H_2SO_4) x 4.01

Potassium hydroxide (g/L) = mL (H_2 SO_4) x 5.64

29.27 PHYSICAL TESTS.

29.27.1 Quality Conformance Specimen Preparation. When the plated articles are of such form, size, shape, and value as to prohibit their use or are not readily adaptable to a quality conformance test, tests shall be made by the use of separate specimens plated concurrently with the articles represented. Unless otherwise specified, the separate specimens shall be of a basis metal equivalent to that of the article represented. EQUIVALENT basis metal includes chemical composition, grade, condition, and finish of surface prior to plating. Conditions affecting the plating of the specimen, including the spacing, plating media, bath agitation, temperature, etc. in respect to other objects being plated shall correspond as nearly as possible to those affecting the significant surfaces of the articles represented. Separate specimens shall not be used for thickness measurements, unless the necessity of their use has been demonstrated.

29.27.2 Specimen Criteria.

a. Specimens for Thickness and Adhesion Tests – if separate specimens for thickness and adhesion tests are required, they shall be strips approximately 25 mm (1 inch) wide, 102 mm (4 inches) long, and 1 mm (0.04 inch) thick.

b. Specimens for Corrosion Resistance Tests – if separate specimens for corrosion resistance tests are required, they shall be panels approximately

152 mm (6 inches) long, 102 mm (4 inches) wide, and 1 mm (0.04 inch) thick.

c. Specimens for Embrittlement-Relief Tests – separate specimens for embrittlement-relief tests shall be round notches specimens with the axis of the specimen (load direction) perpendicular to the short transverse grain flow direction. The configuration shall be in accordance with Figure 8 of ASTM E8 for standard round specimens. Specimens shall have a 60° V-notch located approximately at the center of the gage length. The cross-section area at the root of the Vee shall be approximately equal to half the area of the full cross-section area of the specimen's reduced section. The Vee shall have a 0.254 ± 0.0127 mm (0.010 ± 0.0005 inch) radius of curvature at the base of the notch.

29.27.3 Test.

a. Thickness.

(1) For nondestructive measuring of plating thickness, procedures in accordance with ASTM B117 (Salt Spray (Fog) Apparatus, Operating), ASTM B499 (magnetic test), ASTM B244 (eddy current), ASTM B567 (test by beta radiation backscatter principle), or ASTM B568 (X-ray spectrometry) may be used. For destructive measuring of plating thickness, procedures in accordance with ASTM B487 (microscopic) or ASTM B504 (coulometric) may be used. In addition to the above, the other procedures embodied in AIA/NAS NASM 1312, Test 12 (NASM 1312-12) may be used for thickness measurement of plated fastener hardware. Thickness measurements of cadmium platings, Types II and III, shall be made after application of the supplementary treatments. When the coulometric test is used, the supplementary treatment shall be removed prior to testing. The chromate film may be removed from Type II coating by using a very mild abrasive (a paste of levigated alumina rubbed on with the finger). The phosphate coating may be removed from Type III coating by immersing the specimen in a 10% solution of NaOH and scrubbing with a rubber policeman (usually takes from 10 – 15 minutes).

(2) Samples selected shall be inspected and the plating thickness measured at several locations of each article. The part or article shall be considered nonconforming if one or more of the measurements fail to meet the specified minimum thickness as stated below.

Specified Plating Thickness	Minimum Thickness Allowable
0.0005	0.0003
0.0003	0.0002
0.0002	0.00015

b. Adhesion – adhesion may be determined by scraping the surface or shearing with a sharp edge, knife, or razor through the plating dawn to the basis metal and examining at a magnification of approximately 4 diameters. The plating shall show no separation from the basis metal or from any underplating at the interface, nor shall any underplate show separation from the basis metal at the interface. Alternately, the article or specimen may be clamped in a vice and the projecting portion bent back and forth until rupture occurs. If the edge of the ruptured plating can be peeled back or if separation between the plating and the basis metal can be seen at the point of rupture when examined at 4 diameters magnification, adhesion is not satisfactory. The formation of cracks in the plating caused by rupture of the basis metal, the underplate, or combination of both which do not result in flaking, peeling, or blistering of the plating shall not be cause for rejection.

c. Corrosion Resistance – corrosion resistance shall be conducted in accordance with ASTM B117 (Salt Spray Test). To secure uniformity of results, Type II supplementary coating (chromate treatment) shall be aged at room temperature for 24 hours before subjection to the salt spray. Cadmium plating with the Type II treatment shall show neither white corrosion products of cadmium nor basis metal corrosion products at the end of 96 hours when tested by continuous exposure to the salt spray. The appearance of corrosion products, visible to the unaided eye at normal reading distance shall be cause for rejection, except that white corrosion products at the edges of specimens shall not constitute failure.

d. Embrittlement-Relief.

(1) Four round notched transverse 4340 steel specimens (SAE AMS-S-5000) from 4 separate heat, heat treated to a tensile strength of 260,000 – 280,000 psi shall be prepared for plating. The preparation of the specimen shall correspond as nearly as possible to the preparation of production articles. During plating, the specimens shall be mounted symmetrically on a rack by themselves. All areas of the rack except the contact area shall be coated with a suitable maskant. An ammeter, having a sensitivity of 0.02 amperes or better, shall be connected between the specimen rack and cathode bar. The specimens shall be plated at 5.4 A/dm^2 (50 ASF) for 10 minutes.

After plating, the specimens shall be baked @ 191° ± 14°C (325° ± 25°F) for 23 hours. The baking operation shall be initiated within 4 hours of completion of plating. After cooling, the specimens will be given a Type II chromate coating.

(2) The specimens will be subjected to a static load equal to 75% of the ultimate notched tensible strength of the material for 200 hours.

(3) Upon completion of the 200 hours of static loading, the specimens shall be examined for cracks and fracture. The process shall be considered satisfactory if all specimens show no indication of cracks or fracture.

e. Embrittlement Test (Alternate Method) – embrittlement may be tested by the use of the Boeing Hydrogen Detection instrument or the Lawrence Hydrogen Detection instrument. Operation, calibration, plating, and evaluation of results shall be in accordance with the manufacturer's instructions.

TEST METHOD 11 — CHROMIUM PLATING SOLUTION

29.28 CHROMIC ACID.

a. Procedure.

(1) Pipet a 10 mL sample into a 500-mL volumetric flask and dilute to mark with distilled water.

(2) Pipet a 10 mL aliquot into a 250-mL Erlenmeyer flask.

(3) Add 10 mL of distilled water.

(4) Add 20 mL of 1:1 sulfuric acid.

(5) Pipet 25 mL of 0.1N ferrous ammonium sulfate solution. Record mL of ferrous ammonium sulfate as A.

(6) Titrate with standard (0.1N) potassium permanganate ($KMnO_4$) solution to a faint steel gray end-point. Record mL of ($KMnO_4$) as BM.

(7) Measure into another 250-mL Erlenmeyer flask, 10 mL of 0.1N ferrous ammonium sulfate solution.

(8) Add 80 mL of distilled water.

(9) Add 20 mL of 1:1 sulfuric acid.

(10) Titrate the blank solution with standard (0.1N) potassium permanganate. Record mL of ($KMnO_4$) used in this titration as C.

b. Calculation:

$$\frac{(C \times A}{10} - B) \times N(KMnO_4) = Y$$

YX166.4 = g/L CrO_3

YX22.3 = oz/gal CrO_3

29.28.1 Chromic Acid (Alternate Method).

a. Procedure.

(1) Pipet a 5 mL sample into a 250-mL volumetric flask and dilute to mark with distilled water.

(2) Pipet a 5 mL aliquot into a 250-mL Erlenmeyer flask.

(3) Add approximately 80 mL of distilled water.

(4) Add 10 mL of 10% ammonium bifluoride solution.

(5) Add 15 mL of concentrated hydrochloric acid (HCl).

(6) Add 10 mL of 10% potassium iodide solution. Allow the solution to stand for at least 2 minutes.

(7) Titrate with 0.1N sodium thiosulfate ($Na_2 S_2O_3$) solution to a straw color.

(8) Add 2 – 3 mL of starch indicator solution.

(9) Continue titration until the dark color changes to a clear green.

b. Calculation:

Chromic acid (g/L) = mL ($Na_2 S_2O_3$) x N($Na_2S_2 O_3$) x 333

29.29 SULFATE.

a. Procedure.

(1) Pipet a 10 mL sample into a 250-mL beaker.

(2) Add 25 mL of reducing solution.

(3) Boil for 1 – 5 minutes. (Use a stirring rod or glass beads to prevent bumping.)

(4) Dilute to 125 – 150 mL with hot distilled water.

(5) Add 10 mL of 10% barium chloride.

(6) Place in oven (4 hour minimum, overnight if possible) at 60° – 70°C (140° – 158°F).

(7) Filter through a clean, dried and weighed fine fritted glass crucible (similar to Sargent-Welch #S-24404 B).

(8) Wash precipitate well with hot water.

(9) Dry in oven (1 – 2 hours) at 93° – 121°C (200° – 250°F).

(10) Desiccate and allow to cool to room temperature.

(11) Reweigh crucible.

b. Calculation:

Sulfate (g/L) = weight (ppt in g) x 41.36

29.29.1 Sulfuric Acid (Alternate Method).

a. Procedure.

(1) Pipet a 20 mL sample into a centrifuge tube.

(2) Add 5 mL of 75% hydrochloric acid.

(3) Add 3 mL of 25% barium chloride solution.

(4) Stopper and shake tube.

(5) Centrifuge tube for 1 minute at a #2 setting then 1 minute at a #4 setting.

b. Calculation:

Read sulfate oz/gal directly from centrifuge tube
Sulfate (g/L) = oz/gal x 7.5

29.30 TRIVALENT CHROMIUM.

a. Procedure.

(1) Pipet a 10 mL sample into a 500-mL volumetric flask and dilute to mark with distilled water.

(2) Pipet a 10 mL aliquot into a 250-mL Erlenmeyer flask.

(3) Add 80 mL of distilled water.

(4) Add approximately 0.2 g sodium peroxide.

(5) Boil for 20 – 30 minutes.

(6) Dilute to approximately 100 mL and cool.

(7) Add 2 g ammonium bifluoride.

(8) Add 25 mL of potassium iodide solution (10%).

(9) Add 15 mL of concentrate hydrochloric acid.

(10) Titrate immediately with standard sodium thiosulfate ($Na_2S_2O_3$) to a light yellow-green color.

(11) Add 5 mL starch indicator solution.

(12) Continue titration to a clear green end-point.

b. Calculation:

Trivalent chromium (g/L) = mL ($Na_2S_2O_3$) used for Cr^{3+} – mL ($Na_2S_2O_3$) used for CrO_3 x 8.7

29.31 IRON.

a. Procedure.

(1) Pipet a 10 mL sample into a 250-mL beaker and dilute to 50 mL with distilled water.

(2) Add 40% sodium hydroxide until a precipitate begins to form.

(3) Cover the beaker with a watch glass and add 1 g sodium peroxide.

(4) Boil 10 – 15 minutes.

(5) Filter through No. 1 Whatman filter paper and wash with hot water until all yellow color is removed.

(6) Dissolve the precipitate in the original beaker with 1:1 hydrochloric acid and wash the filter paper until free from acid.

(7) If the solution is green, repeat Steps (2) through (6).

(8) Add concentrated ammonium hydroxide until a precipitate forms, then add 2 mL excess.

(9) Heat to boiling.

(10) Filter through No. 1 Whatman filter paper and wash the filter paper 5 times with hot water.

(11) Dissolve the precipitate into the original beaker with hot 1:4 sulfuric acid.

(12) Wash the filter paper 5 times with hot water.

(13) Place a coil of aluminum wire in the beaker and boil for 30 minutes.

(14) Remove the aluminum coil and wash it off into the beaker with distilled water.

(15) Titrate with 0.5N potassium permanganate ($KMnO_4$) to a permanent faint pink end-point.

b. Calculation:

Iron (g/L) = mL ($KMnO_4$) x N($KMNO_4$) x 5.61

29.31.1 Iron (Optional).

a. Procedure.

(1) Pipet a 5 mL sample into a 250-mL Erlenmeyer flask.

(2) Add 10 mL distilled water.

(3) Add 5 mL (1:1) sulfuric acid.

(4) Titrate with 0.5N potassium permanganate ($KMnO_4$) to a permanent faint pink end-point.

b. Calculation:

Iron (g/L) = mL ($KMnO_4$) x 5.61

29.31.2 Iron (Optional AAS Method).

a. Procedure.

(1) Set Atomic Absorption Spectrophotometer (AAS) to standard conditions for iron according to instrument manual.

NOTE

Alternate wavelength 2.48 nm should be used.

(2) Pipet a 1 mL sample onto a 50-mL volumetric flask, or any convenient 1:50 dilution ratio, and dilute to mark with deionized water. Distilled water may be used. Greater dilutions may be necessary on specific samples.

(3) Optimize flame and burner head position with any iron standard solution and dilution water as a blank. Standardize instrument with appropriate concentrations in ppm of aqueous iron standard solutions.

NOTE

Flame should be very lean (hot) blue.

(4) Aspirate diluted sample directly and record results in Parts Per Million (ppm) from instrument readout.

b. Calculation:

Iron (ppm) = Concentration readout (ppm) X dilution factor

29.32 CHLORIDE DETERMINATION.

a. Procedure.

(1) Pipet 20 mL of sample into a 400-mL beaker.

(2) Add 175 – 200 mL of distilled water.

(3) Add 50 mL of concentrated nitric acid.

(4) Warm to 49° – 54°C (120° – 130°F).

(5) Add silver nitrate solution dropwise while stirring, until no more precipitate forms; avoid an excess of silver nitrate.

(6) Allow precipitate to settle in the dark.

(7) Filter through a weighed fine Selas crucible.

(8) Wash with (1:49) nitric acid then with plain water to remove the acid.

(9) Dry precipitate and crucible at 99° – 140°C (210° – 220°F) for 2 hours, cool and weigh.

b. Calculation:

$$\text{Chloride (ppm)} = \frac{a - b\ (12{,}370)}{C}$$

a = wt of crucible and ppt

b = wt of crucible

c = specific gravity of solution obtained by use of a hydrometer as stated in the procedure of TM-17

29.33 COPPER DETERMINATION.

a. Procedure.

(1) Boil the filtrate from the iron determination until the blue color fades to green.

(2) Add 5 mL 1:4 sulfuric acid.

(3) Dilute to between 50 and 75 mL with water.

(4) Add 20 mL of 20% potassium iodide (KI) solution.

(5) Titrate with 0.1N sodium thiosulfate ($Na_2S_2O_3$) to a straw color.

(6) Add 5 mL of starch indicator solution.

(7) Continue titration until the blue color disappears.

b. Calculation:

Copper (g/L) = mL ($Na_2S_2O_3$) x N($Na_2S_2O_3$) x 6.354

29.33.1 Copper Determination by Atomic Absorption (Optional Method).

a. Procedure.

(1) Set instrument to standard conditions for copper.

NOTE

Wavelength 327.4 nm may be used.

(2) Optimize and standardize with appropriate concentrations in ppm of aqueous copper standard solutions.

(3) Aspirate directly the sample prepared above and record results in ppm from instrument readout.

b. Calculation:

Copper (ppm) = Concentration readout (ppm) x dilution factor

29.34 PHYSICAL TESTS.

29.34.1 Quality Conformance Specimen Preparation. When the plated articles are of such form, size, shape, and value as to prohibit their use or are not readily adaptable to a quality conformance test, tests shall be made by the use of separate specimens plated concurrently with the articles represented. The separate specimens shall be of a basis metal equivalent to that of the article represented. EQUIVALENT basis metal includes chemical composition, grade, condition, and finish of surface prior to plating. Conditions affecting the plating of specimens, including the spacing, plating media, bath agitation, temperature, etc. in respect to other objects being plated shall correspond as nearly as possible to those affecting the significant surfaces of the articles represented. Separate specimens shall not be used for thickness measurements, unless the necessity of their use has been demonstrated.

29.34.2 Specimen Criteria.

a. Specimens for Thickness, Adhesion, and Hardness Tests – if separate specimens for thickness, adhesion, and hardness are required, they shall be strips approximately 25 mm (1 inch) wide, 102 mm (4 inches) long, and 1 mm (0.04 inch) thick.

b. Specimens for Porosity Tests – if separate specimens for porosity tests are required they shall be panels not less than 254 mm (10 inches) long, 76 mm (3 inches) wide, and approximately 1 mm (0.04 inch) thick.

c. Specimens for Embrittlement-Relief – separate specimens for embrittlement-relief shall be round notched specimens with the axis of the specimen (load direction) perpendicular to the short transverse grain flow direction. The configuration shall be in accordance with Figure 8 of ASTM E8 for standard round specimens. Specimens shall have a 60° V-notched located approximately at the center of the gage length. The cross-section area at the root of the Vee shall be approximately equal to half the area of the full cross-section area of the specimens reduced section. The Vee shall have a 0.254 ± 0.0127 mm (0.010 ± 0.0005 inch) radius of curvature at the base of the notch.

29.34.3 Tests.

a. Adhesion – adhesion may be determined by scraping the surface or sheaving with a sharp edge, knife, or razor through the plating down to the basis metal and examining at a magnification of approximately 4 diameters. The plating shall show no separation from the basis metal or from any underplating at the interface, nor shall any underplate show separation from the basis metal at the interface. Alternately the article or specimen may be clamped in a vise and the projecting portion bent back and forth until rupture occurs. If the edge of the ruptured plating can be peeled back or if separation between the plating and the basis metal can be seen at the point of rupture when examined at 4 diameters magnification, adhesion is not satisfactory. The formation of cracks in the plating caused by rupture of the basis metal, the underplate, or combination of both which do not result in flaking, peeling, or blistering of the plating shall not be cause for rejection.

b. Hardness.

(1) The hardness of hard chromium plating shall be determined by a microhardness traverse in accordance with ASTM B-578, except that a Vicker Indenter and 100 gram load shall be used. A minimum of 3 hardness readings shall be made to establish the basis metal hardness in an area at least 0.125 inch (3.175 mm) from the outer surface or at mid radius of the cross-section which ever is less. Readings shall be taken at 0.0005 inch (0.013 mm) intervals starting at 0.001 inch (0.025 mm) from the outer surface in a staggered pattern until the preestablished basis metal hardness is reached. The hardness reading may be plotted versus distance from the outer surface. The point at which the hardness shows a vast decrease may be taken as the limits of chromium plating.

(2) The minimum hardness of hard chromium plating shall be 600 Vickers Hardness Number (VHN) or equivalent. Failure of one or more of the measurements shall constitute nonconformance of this requirement.

c. Embrittlement Test.

(1) Four round notched 4340 steel specimens from 4 separate heats, heat treated to a tensile strength of 260,000 – 280,000 psi, shall be

prepared. The specimens shall be mounted symmetrically on a rack by themselves with all areas of the rack, except the contact points, coated with a suitable maskant. Conditions affecting the plating of the specimens, including the spacing, plating media, bath agitation, temperature, and cleaning operations shall correspond as nearly as possible to those affecting the plating of production items. The specimens shall be plated at 2 amps per square inch for 3 hours then baked for 23 hours at 375° ± 25°F (191° ± 14°C) within 4 hours of removal from the bath.

(2) The specimens shall be subjected to a static loading at 75% of the ultimate notched tensile strength for a duration of 200 hours.

(3) After completion of the static testing, the specimens shall be examined for cracks or fracture. Any evidence of cracks or fracture will be cause for rejection.

d. Embrittlement Test (Alternate Method) – embrittlement may be tested by the use of the Boeing Hydrogen Detection instrument or the Lawrence Hydrogen Detection instrument. Operation, calibration, plating, and evaluation of results shall be in accordance with the manufacturer's instructions.

TEST METHOD 12 — ANALYSIS OF DELTA CADMIUM PLATING SOLUTIONS

29.35 DETERMINATION OF CADMIUM USING ETHYLENEDIAMINETETRAACETIC ACID (EDTA).

a. Reagents:

- Ammonium Hydroxide (NH_4OH)
- Hydrochloric or Sulfuric Acid HCl or H_2SO_4
- Versenate Indicator, Eriochrome Black T or Calmagite Ind. (mallinckrodt)
- Formaldehyde – 8% Solution in Water (21.7 mL of 37% Formaldehyde Diluted to 100 mL)
- EDTA (Disodium Dihydrate Salt) 0.0575 Molar 24.4101 grams per liter

b. Procedure.

(1) Pipette exactly 2 mL of plating solution into a 250-mL Erlenmeyer flask and dilute to about 100 mL with distilled water.

(2) Neutralize to a faint white precipitate with dropwise additions 6N HCl. If no precipitate appears, as sometimes happens with new plating solutions, thymolpthalein can be used as an indicator and will change from blue to colorless on neutralization.

(3) Add 10 mL concentrate ammonium hydroxide and about 3 drops VERSENATE INDICATOR. The proper amount of indicator should be a solution that can just be seen through.

(4) Add 8 mL of 8% formaldehyde solution.

(5) Titrate immediately with the EDTA solution. The color change is from reddish-purple to blue with the color change being the sharpest when the solution is titrated immediately after adding the formaldehyde.

c. Calculation:

Cadmium (g/L) = mL (EDTA) x 3.24

29.36 DETERMINATION OF TOTAL CYANIDE.

a. Procedure.

(1) Pipette a 2 mL sample into a 250-mL flask.

(2) Add 50 mL of water, 15 mL concentrate ammonium hydroxide and 5 mL of 10% potassium iodide solution.

(3) Titrate with 0.1N silver nitrate to a faint white turbidity.

b. Calculation:

Total NaCN(g/L) = mL ($AgNO_3$) x 4.91

29.37 DETERMINATION OF CAUSTIC SODA.

a. Procedure.

(1) Pipette a 10 mL sample into a 250-mL flask.

(2) Add 1 gram NaCN, 10 mL water, and 10 drops sulfo-orange indicator.

(3) Titrate with 1.000N sulfuric acid until color changes from orange to lemon-yellow.

b. Calculation:

NaOH (g/L) – mL (H_2 SO_4) x 4.02

29.38 DETERMINATION OF CARBONATE.

a. Procedure.

(1) Pipette 10 mL sample into 250-mL beaker.

(2) Add 5 mL concentrate ammonium hydroxide, (NH_4OH) 100 mL water.

(3) Heat and add, while stirring, 10 mL Sat. barium chloride.

(4) Allow ppt. to settle and filter through Whatman #1 paper, adding a few drops of barium chloride to first portion of filtrate to determine if carbonate precipitation is complete.

(5) Wash precipitate thoroughly with hot water.

(6) Transfer paper and precipitate back to original beaker.

(7) Add 100 mL hot water, 6 – 8 drops mixed indicator (methyl-orange-xylene cyanole).

(8) Titrate with 1.000N hydrochloric acid (HCl) to purple end-point.

b. Calculation:

Na_2CO_3 (g/L) = mL (HCl) x 5.33

29.39 DETERMINATION OF TITANIUM IN SOLUTION (COLORMETRIC).

a. Procedure.

(1) Mix 10 mL of solution and 10 mL of 30% hydrogen peroxide (H_2O_2) in 750-mL Erlenmeyer flask and allow to react (Exothermic).

(2) Add 50 mL concentrate sulfuric acid (H_2SO_4) and heat to boiling. Boil 3 – 5 minutes.

(3) Allow to cool for 5 – 10 minutes, then add 40 – 45 mL distilled water and cool rapidly to room temperature.

(4) Pour into 100-mL Nessler tube, volumetric flask, or graduated cylinder, dilute to exact volume, and mix well.

(5) Pour equal portions into 2 spectrophotometer tubes and add 1 drop 35% hydrogen peroxide (H_2O_2) to second tube.

(6) Check transmission at 405 mμ and determine ppm from predetermined curve using tube #1 as blank.

NOTE

If visual color comparison method is used, add 2 drops 35% H_2O_2 to sample in Step (4), then dilute to exact volume, mix and compare with previously prepared standards.

b. Not Applicable.

29.40 DETERMINATION OF TITANIUM CONTENT OF DEPOSIT.

a. Procedure.

(1) Plate 0.001 inch or greater metal thickness at normal current density onto PASSIVE stainless steel, nickel, or chrome-plated base, so as to produce non-adherent deposit.

(2) Remove portion of deposit mechanically, wash, dry, and weigh on analytical balance.

(3) Dissolve weighed deposit in 50 mL 15 – 20% sulfuric acid (H_2SO_4). (Boil until deposit is dissolved.)

(4) Add enough 1:1 sulfuric acid (H_2SO_4) to make almost 100 mL and cool to room temperature.

(5) Proceed from Paragraph 29.39, Step a(4) in previous titanium analysis.

b. Calculation:

ppm Ti x 0.0001 = grams in 100 mL

$$\frac{100 \text{ x grams Ti in 100 mL}}{\text{grams deposit in 100 mL}} = \text{\% Ti in deposit}$$

29.41 PREPARATION OF COLORMETRIC TITANIUM STANDARDS (FOR SPECTROPHOTOMETRIC OR VISUAL COLOR COMPARISON).

a. Using standard titanium solution (1000 ppm titanium) prepare a series of 10 samples representing from 10 – 100 ppm titanium by pipetting 1/10 mL of standard titanium solution for each 10 ppm to be represented into 90 mL of 50% sulfuric acid in a 100-mL Nessler tube.

b. Add 1 – 2 drops of 35% hydrogen peroxide to each sample, make up to exactly 100 mL with additional 50% sulfuric acid and mix thoroughly.

NOTE

Due to 1:10 dilution of bath sample involved in analyzing titanium content of solution, the standards prepared in the above manner represent titanium contents of 10 – 100 ppm in the bath. Calculation: will show that actual range is 1 – 10 ppm.

c. For analysis of titanium content of deposit in which no dilution is involved, an additional series of 8 color standards, ranging from 15 – 50 ppm in 5 ppm increments, should be prepared in the same manner as outlined previously, except that 1.0 mL of standard titanium solution will be used for each 10 ppm represented.

NOTE

- If kept cool, and in a dark place, the color developed in the standards will be stable for periods up to 2 weeks. Periodic additions of 1 drop of 35% hydrogen peroxide (H_2O_2) will extend usable range up to several months.
- If color standards are to be used in plotting spectrophoto meter curves, it will be found that use of semi-log paper such as K & E #46-4970 (2 cycles x 70 divisions) will allow both ranges to be plotted on a single sheet.
- Region of maximum absorption is 400 – 415 mμ.

29.42 DETERMINATION OF IRON CONTENT.

a. Procedure.

(1) Pipette 5 mL sample into 750-mL flask.

(2) Add 10 mL 35% hydrogen peroxide (H_2O_2) and allow to react until foaming subsides.

(3) Add 20 mL 1:1 sulfuric acid (H_2SO_4) and heat to SO_3 fumes.

(4) Cool, add 100 mL distilled water, 40 mL concentrate ammonium hydroxide (NH_4OH) and reheat to boiling.

(5) Allow to cool to room temperature, filter through Whatman #1 filter paper or equivalent, and wash thoroughly with distilled water containing a few drops of ammonium hydroxide.

(6) Redissolve precipitate into clean 250-mL beaker with 10% sulfuric acid (H_2SO_4).

(7) Wash thoroughly with distilled water.

(8) Dilute filtrate to approximately 150 mL, add 1/10 gram hydroxylamine hydrochloride and titrate electrometrically with 1:1 ammonium hydroxide (NH_4OH) to pH 3.50.

(9) Add 10 mL 2 g/L orthophenanthroline solution, dilute to exactly 200 mL, mix well and allow to stand for 15 – 30 minutes.

(10) Determine transmission at 510 mμ, using distilled water as blank and calculate iron content from previously determined curve.

b. Calculation – if approximate amount of iron in solution is known or can be estimated, actual content can be determined using only 1 standard of known iron content by means of the following equation, Fe value of standard being as close to estimated range as possible.

$$X \times \frac{\text{Density of Unknown}}{\text{Density of Known}}$$

X = known iron content in ppm

TEST METHOD 13 — NICKEL STRIKE SOLUTION

29.43 NICKEL CONTENT DETERMINATION.

a. Procedure.

(1) Pipet a 1 mL sample into a 250-mL Erlenmeyer flask.

(2) Add approximately 80 mL of distilled water.

(3) Add 10 mL ammonium hydroxide.

(4) Add approximately 1 gram of murexide indicator mix.

(5) Titrate with 0.1 M EDTA to a blue or purple end-point.

b. Calculation:

Nickel (g/L) = mL (EDTA used) x 5.94

29.43.1 Nickel Content (Optional AAS Method).

a. Procedure.

(1) Set AAS to standard conditions for nickel according to instrument operations manual.

(2) Pipet a 10 mL sample into a 50-mL volumetric flask, (other convenient dilution ratio may be used), and dilute to mark with distilled water.

(3) Mix solution thoroughly.

(4) Optimize flame and burner head position with any nickel standard solution and distilled water as a blank.

(5) Standardize AAS with appropriate concentrations of aqueous nickel standard solutions.

(6) Aspirate diluted sample directly and record results in ppm for instrument read out.

b. Calculation:

Nickel (ppm) = concentration read out (ppm) x dilution factor

29.44 CHLORIDE DETERMINATION.

a. Procedure.

(1) Pipet a 5 mL sample into a 250-mL Erlenmeyer flask.

(2) Add approximately 80 mL of distilled water.

(3) Add approximately 2 grams of sodium bicarbonate.

(4) Add approximately 2.5 mL of potassium chromate solution.

(5) Titrate with standard 0.1N silver nitrate until the white precipitate of silver chloride takes a faint reddish-brown tint.

b. Calculation:

Chloride (g/L) = mL ($AgNO_3$ used) x 0.713

TEST METHOD 14 — CHROMIC ACID BRIGHT DIP

29.45 CHROMIC ACID DETERMINATION.

a. Procedure.

(1) Pipet a 10 mL sample into a 250-mL volumetric flask and dilute to the mark with distilled water.

(2) Pipet a 10 mL aliquot into a 250-mL Erlenmeyer flask.

(3) Add approximately 80 mL of distilled water.

(4) Add approximately 1 gram of ammonium bifluoride.

(5) Add 15 mL of concentrated hydrochloric acid.

(6) Add 10 mL of potassium iodide indicator solution (100 g/L).

(7) Titrate with 0.1N sodium thiosulfate ($Na_2S_2O_3$) until the solution is a straw color.

(8) Add 3 – 5 mL starch indicator solution.

(9) Continue titration to a pale green end-point.

b. Calculation:

Chromic acid (g/L) = mL ($Na_2S_2O_3$ used) x N ($Na_2S_2O_3$) x 33.6

TEST METHOD 15 — ALKALINE SMUT REMOVER

29.46 CYANIDE DETERMINATION.

a. Procedure.

(1) Pipet a 5 mL sample into a 250-mL Erlenmeyer flask.

(2) Add approximately 80 mL of distilled water.

(3) Add 10 mL of 10% potassium iodine indicator solution.

(4) Titrate with 0.1N silver nitrate solution to a faint permanent turbidity.

(5) Record mL of silver nitrate used.

b. Calculation:

NaCN(g/L) = mL ($AgNO_3$) x 1.965

29.47 ALKALINE DETERMINATION.

a. Procedure.

(1) Pipet a 5 mL sample into a 250-mL Erlenmeyer flask.

(2) Add approximately 80 mL of distilled water.

(3) Add 3 – 5 drops of phenophthalein indicator solution.

(4) Titrate with 0.1N sulfuric acid to a colorless end-point.

(5) Record mL of sulfuric acid used.

b. Calculation:

Alkali (g/L) = mL (H_2SO_4) x N(H_2SO_4) x 10.125

TEST METHOD 16 — COPPER STRIKE

29.48 COPPER METAL DETERMINATION.

a. Procedure.

(1) Pipet a 1 mL sample into a 250-mL Erlenmeyer flask.

(2) Under a hood, add 20 mL of concentrated hydrochloric acid. When fuming starts, add ½ gram of ammonium persulfate and continue heating to near dryness.

(3) Remove from heat and cool.

(4) Cautiously add 100 mL of distilled water.

(5) Add dropwise, 1:1 ammonium hydroxide (NH_4OH) to the first permanent change. A deep blue color should result; too much ammonia will obscure the end-point.

(6) Add ½ gram of murexide indicator.

(7) Titrate with standard EDTA solution to a purple end-point.

b. Calculation:

Copper cyanide (g/L) = mL (EDTA used) x factor
Copper metal (g/L) = mL (EDTA used) x 3.23

29.48.1 Metallic Copper (Alternate Method).

a. Procedure.

(1) Pipet a 10 mL sample into a 250-mL beaker.

(2) Under a hood, add 10 mL concentrated sulfuric acid (H_2SO_4) and 5 mL concentrated nitric acid (HNO_3).

(3) Boil to slight SO_3 fumes, if solution turns black, add small additions of nitric acid until clear.

(4) Add 150 mL of distilled water.

(5) Add 5 grams of urea.

(6) Plate at 1 – 3 amps for 1 hour.

b. Calculation:

Metallic copper (g/L) = wt (Cu in g) x 100.5

29.48.2 Metallic Copper (Alternate Method).

a. Procedure.

(1) Pipet a 5 mL sample into a 250-mL Erlenmeyer flask.

(2) Slowly add 10 mL concentrated sulfuric acid.

(3) Add 10 mL of concentrated nitric acid.

(4) Heat until dense white fumes of sulfur trioxide appear in the flask. Note if the solution is dark. Add concentrated nitric acid in 5 mL increments until the dark color disappears. Heat again to dense white fumes. If the solution is clear blue, proceed.

(5) Cool and slowly add distilled water until further additions do not cause it to boil.

(6) Cool to room temperature.

(7) Slowly add concentrated ammonium hydroxide until the solution is ammonical, indicated by a deeper blue, then boil 15 minutes.

(8) Slowly add concentrated acetic acid until the solution becomes lighter. Add 2 mL excess.

(9) Cool to room temperature.

(10) Add 20 mL of 10% potassium iodide solution.

(11) Titrate immediately with 0.1N sodium thiosulfate ($Na_2S_2O_3$) to a straw color.

(12) Add 3 – 5 mL starch indicator solution.

(13) Continue titration until the blue color disappears for about 1 minute.

b. Calculation:

Cu (g/L) = mL ($Na_2S_2O_3$) x N ($Na_2S_2O_3$) x 12.75

29.48.3 Metallic Copper (Alternate Method).

a. Procedure.

(1) Pipet 25 mL sample into a 500-mL Erlenmeyer flask.

(2) Add 15 mL conc sulfuric acid and boil until precipitate turns black.

(3) Add 5 mL conc nitric acid and heat to strong white fumes. (If precipitate still exists, repeat until solution is clear to pale green.)

(4) Cool and carefully add 100 mL water. Heat if necessary to dissolve precipitate.

(5) Add 1 – 2 grams ammonium bifluoride and cool.

(6) Carefully add ammonium hydroxide until the solution turns dark blue.

(7) Boil 15 minutes to expel the excess hydroxide.

(8) Add acetic acid dropwise until solution turns light blue and add 1 mL excess.

(9) Cool and add 25 mL 20% potassium iodide.

(10) Titrate with 0.4N sodium thiosulfate to white precipitate adding starch indicator just prior to end-point. The solution will contain a precipitate colored blue by iodine. The end-point is difficult to detect but can be enhanced by addition of 2 grams ammonium or potassium thiocyanate when the blue color fades to gray.

b. Calculation:

$$\text{Cu, oz/gal} = \frac{(V)\ (N)\ (63.5)}{(SS)\ (7.5)}$$

Where

V = volume $Na_2S_2O_3$

N = normality of $Na_2S_2O_3$

SS = vol of sample in mL

29.49 FREE CYANIDE DETERMINATION.

a. Procedure.

(1) Pipet a 10 mL sample into a 250-mL Erlenmeyer flask.

(2) Add approximately 80 mL of distilled water.

(3) Add 10 mL of 10% potassium iodide (KI) indicator solution.

(4) Titrate with 0.1N silver nitrate to a permanent faint opalescence or yellow turbidity.

b. Calculation:

Free cyanide (sodium cyanide) g/L = mL ($AgNO_3$) x N($AgNO_3$) x 9.83

Free cyanide (potassium cyanide) g/L = mL ($AgNO_3$) x N($AgNO_3$) x 13.05

29.50 HYDROXIDE DETERMINATION.

a. Procedure.

(1) Pipet a 10 mL sample into a 250-mL Erlenmeyer flask.

(2) Add 25 mL of distilled water.

(3) Add 5 – 7 drops of La Motte sulfo-orange indicator solution.

(4) Titrate with 0.1N hydrochloric acid to a yellow end-point.

b. Calculation:

Sodium hydroxide (g/L) = mL (HCl used) x N(HCl) x 4.01

Potassium hydroxide (g/L) = mL (HCl used) x N(HCl) x 5.62

29.51 CARBONATE DETERMINATION.

a. Procedure.

(1) Pipet a 10 mL sample into a 250-mL beaker.

(2) Add approximately 100 mL of distilled water.

(3) Heat to 43° – 60°C (110° – 140°F).

(4) Add 10% barium chloride solution until no more precipitate forms.

(5) Allow precipitate to settle.

(6) Filter and add a few drops of 10% barium chloride to the first portion of the filtrate to determine if precipitation is complete.

(7) Wash precipitate with hot water and transfer the filter paper and precipitate to the original beaker.

(8) Add 50 mL of hot distilled water.

(9) Add several drops of methyl orange indicator solution.

(10) Titrate with 0.5N hydrochloric acid to a permanent pink end-point.

b. Calculation:

Sodium carbonate (g/L) = mL (HCl used) x N(HCl) x 5.3

Potassium carbonate (g/L) = mL (HCl used) x N(HCl) x 6.94

TEST METHOD 17 — ZINCATE

29.52 SPECIFIC GRAVITY.

a. Procedure.

(1) Pour a suitable amount of solution into a 250-mL hydrometer cylinder.

(2) Place a suitable range hydrometer into the solution.

(3) After the hydrometer has settled, gently push it deeper into the solution and release it.

(4) Observe the meniscus where it intercepts the hydrometer by bringing the eye level with the solution level.

(5) Take the reading from the hydrometer scale.

(6) Repeat Steps (3) through (5) several times.

b. Concentration Determination.

(1) Develop a graph with g/L vs specific gravity.

(2) Make up small solutions containing varying concentrations of zincate salts used.

(3) Take hydrometer readings from these solutions and plot them on the graph and connect points.

(4) Take specific reading from above, find point on graph and read concentration.

TEST METHOD 18 — pH DETERMINATION

29.53 PH DETERMINATION.

a. Procedure.

(1) Standardize pH meter.

(a) Wash electrodes with distilled water and wipe with absorbent tissue.

(b) Set temperature compensator to room temperature.

(c) Immerse electrodes in a beaker or suitable vessel containing the buffer solution so that the tips of the electrodes are at least ¼ inch below the surface of the solution.

NOTE

Use a buffer solution close to the pH being tested.

(d) Turn pH meter control to READ and adjust the calibration control until the meter indicates the same reading as on the buffer used.

(e) Turn pH meter control to NEUTRAL or REFERENCE position.

(f) Remove electrodes from buffer solution, rinse them with distilled water and dry with absorbent tissue.

(2) Solution pH determination.

(a) Place a sample of solution in a small beaker or suitable vessel.

(b) Immerse electrodes into the sample solution so that the tips of the electrodes are at least ¼ inch below the surface of the solution.

(c) Turn meter control to READ and read needle position.

(d) Remove electrodes from solution, rinse in distilled water.

(e) Store electrodes in clean distilled water when not in use.

b. Not Applicable.

TEST METHOD 19 — SILVER PLATING AND STRIP SOLUTIONS

29.54 METALLIC SILVER.

a. Procedure.

(1) Pipet a 5 mL sample (use a 10 mL sample for silver strike) of the plating solution into a 250-mL Erlenmeyer flask.

(2) Under a hood, cautiously add 20 mL of concentrated sulfuric acid (H_2SO_4) and 15 mL of concentrated nitric acid (HNO_3).

(3) Add several glass beads to flask.

(4) Agitate contents and boil until all white precipitate has dissolved.

(5) Cool.

(6) Cautiously add 100 mL of distilled water and swirl flask to dissolve any solids.

(7) Cool.

(8) Add 3 – 5 mL saturated ferric ammonia sulfate solution.

(9) Titrate with 0.1N potassium thiocyanate solution to a pink end-point.

b. Calculation:

For 5 mL sample silver (g/L) = mL (KCNS used) x N(KCNS) x 10.8

For 5 mL sample silver cyanide (g/L) = mL (KCNS used) x N(KCNS) x 13.43

For 10 mL sample silver (g/L) = mL (KCNS used) x N(KCNS) x 21.6

For 10 mL sample silver cyanide (g/L) = mL (KCNS used) x N(KCNS) x 26.78

29.54.1 Metallic Silver (Alternate Method).

a. Procedure.

(1) Pipet a 5 mL sample (100 mL for silver strike solution) into a 250-mL beaker.

(2) Add 150 mL of distilled water.

(3) Add 5 grams of potassium hydroxide.

(4) Add 10 grams of potassium cyanide.

(5) Plate at 1.8 – 2.2 amps on weighed platinum electrodes until all the silver is removed from the solution (approximately 30 mins).

(6) Stop current as electrode is removed from the solution.

(7) Rinse electrode in distilled water.

(8) Dry in oven.

(9) Cool in desiccator.

(10) Weigh.

b. Calculation:

For 5 mL sample silver (g/L) = wt ($AgNO_3$ in g) x 200
For 100 mL sample silver (g/L) = wt ($AGNO_3$ in g) x 9.975

29.55 FREE POTASSIUM CYANIDE.

a. Procedure.

(1) Pipet a 5 mL sample into a 250-mL Erlenmeyer flask.

(2) Add 100 mL of distilled water.

(3) Add 10 mL of 10% potassium iodide solution.

(4) Titrate with standard silver nitrate solution to a permanent, faint opalescence or yellow turbidity.

b. Calculation:

Free potassium cyanide (g/L) = mL ($AgNO_3$) x N($AgNO_3$) x 26.1

29.56 POTASSIUM CARBONATE DETERMINATION.

a. Procedure.

(1) Pipet a 10 mL sample into a 250-mL beaker.

(2) Add 100 mL of distilled water.

(3) Heat to 43° – 60°C (110° – 140°F).

(4) Add 10% barium chloride while stirring until no more precipitate forms.

(5) Allow the precipitate to settle.

(6) Filter through No. 2 Whatman filter paper and add several drops more barium chloride solution to determine if precipitation is complete.

(7) Wash with hot water and transfer filter paper and precipitate to the original beaker.

(8) Add 50 mL of hot distilled water.

(9) Add several drops of methyl orange indicator solution.

(10) Titrate with 0.5N hydrochloric acid to a permanent pink end-point.

b. Calculation:

Potassium carbonate (g/L) = mL (HCl used) x N(HCl) x 6.94

29.57 POTASSIUM HYDROXIDE DETERMINATION.

a. Procedure.

(1) Pipet a 10 mL sample into a 250-mL Erlenmeyer flask.

(2) Add 10 mL of distilled water.

(3) Add 6 – 8 drops of La Motte sulfa-orange indicator.

(4) Titrate with 0.5N hydrochloric acid to a yellow end-point.

b. Calculation:

Potassium hydroxide (g/L) = mL (HCl used) x N(HCl) x 5.62

29.58 PHYSICAL TESTS.

29.58.1 Quality Conformance Specimen Preparation. When the plated articles are of such form, size, shape, and value as to prohibit their use or are not readily adaptable to a quality conformance test, tests shall be made by the use of separate specimens plated concurrently with the articles represented. Unless otherwise specified, the separate specimens shall be of a basis metal equivalent to that of the article represented. EQUIVALENT basis metal includes chemical composition, grade, condition, and finish of surface prior to plating. Conditions affecting the plating of the specimen, including the spacing, plating media, bath agitation, temperature, etc. in respect to the other objects being plated, shall correspond as nearly as possible to those affecting the significant surfaces of the articles represented. Separate specimens shall not be used for thickness measurements unless the necessity for their use has been demonstrated.

29.58.2 Specimen Criteria.

a. Specimens for Thickness, Adhesion, and Roughness Tests – if separate specimens for thickness, adhesion, and roughness tests are required, they shall be strips approximately 25 mm (1 inch wide), 102 mm (4 inches) long, and 1 mm (0.04 inch) thick.

b. Specimens for Embrittlement-Relief Tests – separate specimens for embrittlement-relief tests shall be round notched specimens with the axis of the specimen (load direction) perpendicular to the short transverse grain flow direction. The configuration shall be in accordance with Figure 8 of ASTM E8 for standard round specimens. Specimens shall have a 60° V-notch located approximately at the center of the gage length. The cross-section area at the root of the Vee shall be approximately equal to half the area of the full cross-section area of the specimen's reduced section. The Vee shall have a 0.25 ± 0.0127 mm (0.010 ± 0.0005 inch) radius of curvature at the base of the notch.

29.58.3 Tests.

a. Thickness – thickness measurements may be made by any suitable method provided the specific method and equipment used shall be such that the coating thickness will be determined within ±10% of its true thickness. The following methods for thickness may be used as applicable: ASTM B487 (microscopic), ASTM B504 (coulometric), ASTM B499 (magnetic), beta radiation backscatter, or X-ray spectrometry. Measurements on threaded fasteners shall be made on the shank or other smooth surface as close to the threads as possible. The minimum plating thickness shall be 0.0005 on all surfaces on which silver is functionally necessary (for example: appearance, wear, corrosion protection, conductivity). The plating on nonfunctional surfaces and areas shall be of sufficient thickness to ensure plating continuity and uniform utility, appearance, and protection. On ferrous surfaces the total plated thickness shall be not less than 0.0254 mm (0.001 inch). This must be comprised of at least 0.0127 mm (0.0005 inch) or more of silver plate over 0.0127 mm (0.0005 inch) or less of nickel or copper or any combination of nickel and copper. Measure plated thickness at several locations on each article selected. The part or article shall be considered nonconforming if one or more measurements fail to meet the specified minimum thickness.

b. Adhesion.

(1) The test specimens shall be bent repeatedly through an angle of 180° on a diameter equal to the thickness of the specimen until fracture of the basis metal occurs. Following fracture of the basis metal, it shall not be possible to detach any areas of the coating with a sharp instrument. When the plated articles are not readily adaptable to the bend test, adhesion may be determined on the plated article by cutting the plating from the basis metal at the interface in a continuous path and examining at 4 diameters magnification to determine if removal has been caused by the cutting away of an adherent plate or by the lifting of a non-adherent plate. The adhesion of the silver plating and any undercoating shall be such that neither the silver plating nor any electrodeposited undercoat shall show separation from the basis metal or from each other at their common interfaces. The formation of cracks in the basis metal or plate which do not result in flaking, peeling, or blistering of the plate shall not be considered as nonconformance to this requirement.

(2) An alternate adhesion test may be used. In this test, parts are placed in an oven and heated at 150° – 200°C (300° – 392°F). This temperature shall be maintained long enough to bring the items to temperature and then continue for 30 minutes. The test specimens shall be removed, cooled in air, and examined under 4 diameters magnification for evidence of blistering of the silver deposit. Any blistering constitutes failure of the specimen.

c. Embrittlement-Relief Test.

(1) Four round notched transverse 4340 steel specimens from 4 separate heats, heated to a tensile strength of 260,000 – 280,000 psi shall be prepared for plating. The preparation of the specimens shall correspond as nearly as possible to the preparation of production articles. During plating, the specimens shall be mounted symmetrically on a rack by themselves. All areas of the rack, except the contact area, shall be coated with a suitable maskant. An ammeter having a sensitivity of 0.02 amperes or better shall be connected between the specimen rack and cathode bar. The specimens shall be plated at normal current densities for 3 hours. After plating, the specimens shall be baked at 191° ± 14°C (375° ± 25°F) for 23 hours. The baking operation will be initiated within 4 hours of completion of plating.

(2) The specimens shall be subjected to a static load equal to 75% of the ultimate notch tensile strength of the material for 200 hours.

(3) Upon completion of the 200 hours of static loading, the specimens shall be examined for evidence of cracks and fracture. The process shall be considered satisfactory if all specimens show no indication of cracks or failure.

d. Embrittlement Test (Alternate Method).

(1) Embrittlement may be tested by the use of the Boeing Hydrogen Detection instrument or the

Lawrence Hydrogen Detection instrument. Operation, calibration, plating, and evaluation of results shall be in accordance with the manufacturer's instructions.

(2) Operation, calibration, plating, and evaluation of results shall be in accordance with the manufacturer's instructions.

TEST METHOD 20 — ALKALINITY

29.59 ALKALINITY DETERMINATION.

a. Procedure.

(1) Pipet a 10 mL sample into a 250-mL Erlenmeyer flask.

(2) Add 75 mL of distilled water.

(3) Add several drops of phenolphthalein indicator solution.

(4) Titrate with 0.5N hydrochloric acid to a colorless end-point.

b. Calculation:

Sodium hydroxide (g/L) = mL (HCl used) x N(HCl) x 4.01

TEST METHOD 21 — TIN PLATING

29.60 SODIUM STANNATE DETERMINATION.

a. Procedure.

(1) Pipet a 5 mL sample into a 500-mL flask.

(2) Add 120 mL of distilled water.

(3) Add 60 mL of concentrated hydrochloric acid (HCl).

(4) Add 1 gram of antimony powder.

(5) Boil for 15 – 20 minutes and insert a stopper with tube. Place the lower end of tube into a 300-mL beaker which contains 200 – 250 mL of saturated sodium bicarbonate solution.

(6) Cool in water bath.

(7) Remove stopper and add 5 mL of starch indicator solution.

(8) Immediately titrate with 0.1N potassium iodine solution to a permanent blue end-point.

b. Calculation:

Stannate (g/L) = mL (KI used) x 0.596

29.61 TOTAL AND FREE CAUSTIC SODA.

a. Procedure.

(1) Pipet a 10 mL sample into a 250-mL Erlenmeyer flask.

(2) Add 80 mL of distilled water.

(3) Add several drops of phenolphathalein indicator solution.

(4) Titrate with 0.5N hydrochloric acid to a colorless end-point.

b. Calculation:

Total sodium hydroxide (g/L) = mL (HCl used) x N(HCl) x 4.01

Free sodium hydroxide (g/L) = g/L total NaOH – (g/L sodium stannate) x 0.14

29.62 PHYSICAL TEST.

29.62.1 Quality Conformance Specimen Preparation. When the plated articles are of such form, shape, size, and value as to prohibit their use or are not readily adaptable to a quality conformance test, test shall be made by the use of separate specimens plated concurrently with the articles represented. Unless otherwise specified, the separate specimens shall be of a basis metal equivalent to that of the article represented. EQUIVALENT basis metal includes chemical composition, grade, condition, and finish of surface prior to plating. Conditions affecting the plating of the specimen, including the spacing, plating media, bath agitation, temperature, etc. in respect to other objects being plated shall correspond as nearly as possible to those affecting the significant surfaces of the articles represented. Separate specimens shall not be used for the thickness measurements, unless the necessity of their use has been demonstrated.

29.62.2 Specimen Criteria.

a. Specimens for Thickness, Adhesion, and Solderability Tests – if separate specimens for thickness, adhesion, and solderability tests are required, they should be strips approximately 25 mm (1 inch) wide, 102 mm (4 inches) long, and 1 mm (0.04 inch) thick.

b. Specimens for Corrosion Resistance Tests – if separate specimens for corrosion resistance tests are required, they shall be panels approximately 152 mm (6 inches) long, 102 mm (4 inches) wide, and 1 mm (0.04 inch) thick.

29.62.3 Tests.

a. Thickness – for nondestructive measuring of plating thickness, procedures in accordance with ASTM B117 (Salt Spray (Fog) Apparatus, Operating), ASTM B499 (magnetic test), ASTM B244 (eddy current), ASTM B567 (test by beta radiation backscatter principle), or ASTM B568 (X-ray spectrometry) may be used. For destructive measuring of plating thickness, procedures in accordance with ASTM B487 (microscopic) or ASTM B504 (coulometric) may be used. In addition to the above, the other procedures embodied in AIA/NAS NASM 1312, Test 12 (NASM 1312-12) may be used for thickness measurement of plating fastener hardware. The minimum thickness on significant surfaces of the finished items shall be as specified on the drawing or be of sufficient thickness to ensure plating continuity and uniform utility, appearance, and protection. Significant surfaces are those surfaces which can be touched with a sphere 19 mm (¾ inch) in diameter and that are visible when subjected to wear or corrosion or both. Measurements shall be made in several representative locations on each item. The item shall be considered defective if one or more of the measurements fail to meet the specified minimum thickness.

b. Adhesion – adhesion may be determined by scraping the surface or shearing with a sharp edge, knife, or razor through the plating down to the basis metal and examining at a magnification of approximately 4 diameters. The plating shall show no separation from the basis metal or from any underplating at the interface, nor shall any underplate show separation from the basis metal at the interface. Alternately, the article or specimen may be clamped in a vice and the projecting portion bent back and forth until rupture occurs. If the edge of the ruptured plating can be peeled back or if separation between the plating and the basis metal can be seen at the point of rupture when examined at 4 diameters magnification, adhesion is not satisfactory. The formation of cracks in the plating caused by rupture of the basis metal, the underplate, or combination of both which do not result in flaking, peeling, or blistering of the plating shall not be cause for rejection.

c. Salt Spray – coated items shall be subjected to a 24-hour 20% sodium chloride solution, salt spray test in accordance with ASTM E376. At completion of the test, the coating shall be inspected for corrosion. The appearance of more than 6 corroded areas per square foot of surface that are visible to the unaided eye or of any corroded area larger than 1.6 mm (1/16 inch) in diameter, shall be cause for rejection. A CORRODED AREA is defined as exposure or corrosion of the basis metal.

d. Solderability – plated test specimens shall be suitably fluxed with a noncorrosive flux conforming to Type IV of Specification A-A-51145, J-STD-004, J-STD-005, and J-STD-006 and then immersed in a solder composed of 40% tin and 60% lead conforming to Specification J-STD-004, J-STD-005, J-STD-006 for 3 seconds at a solder-pot temperature of 288° – 316°C (550° – 600°F), removed and shaken lightly to remove excess solder. The solder shall adhere to the electrodeposit evenly without lump formation; and firmly, so that it cannot be lifted with a sharp-edged instrument. Lumping or peeling of the solder shall not be considered as nonconformance with this requirement.

TEST METHOD 22 — CYANIDE DIP SOLUTION

29.63 FREE CYANIDE DETERMINATION.

a. Procedure.

(1) Pipet a 5 mL sample into a 250-mL Erlenmeyer flask.

(2) Add 80 mL of distilled water.

(3) Add 5 mL of potassium iodide indicator solution.

(4) Titrate with standard 0.1N silver nitrate solution to a faint permanent turbidity.

b. Calculation:

Free sodium cyanide (g/L) = mL ($AgNO_3$used) x 1.97

TEST METHOD 23 — LEAD PLATING SOLUTION

29.64 METALLIC LEAD DETERMINATION.

a. Procedure.

(1) Pipet a 10 mL sample into a 250-mL beaker.

(2) Add 150 mL of distilled water.

(3) Heat to boiling.

(4) Add 1:4 sulfuric acid until the precipitation of lead sulfate is complete, then add 5 additional centimeters.

(5) Allow precipitate to settle.

(6) Cool to room temperature.

(7) Filter through a weighed 3001 Selas crucible.

(8) Wash with cold (1:49) sulfuric acid.

(9) Dry crucible at 102° – 121°C (215° – 250°F) and ignite for 1 hour at 427° – 454°C (800° – 850°F).

(10) Cool in desiccator.

(11) Weigh.

b. Calculation:

Lead metal (g/L) = wt ($PbSO_4$) x 68.33

29.64.1 Metallic Lead (Alternate Method).

a. Procedure.

(1) Pipet a 5 mL sample into a 250-mL Erlenmeyer flask.

(2) Add 25 mL of distilled water.

(3) Carefully add sodium acetate until a permanent turbidity forms.

(4) Add 10 – 15 drops of xylenol orange indicator.

(5) Titrate with 0.1 M EDTA to a clear yellow end-point.

b. Calculation:

Lead metal (g/L) = mL (EDTA used) x 4.13

29.64.2 Metallic Lead by AAS.

a. Procedure.

(1) Set the AAS to standard conditions for lead according to instrument manual.

(2) Pipet a 10 mL sample into a 50-mL volumetric flask, or any convenient 1:5 dilution ratio, and dilute to mark with deionized water. Distilled water may be used. Greater dilutions may be necessary on specific samples.

(3) With dilution water as a blank, optimize flame and burner head position with any lead standard solution. Standardize AAS with appropriate concentrations of aqueous lead standard solutions.

(4) Aspirate diluted sample directly and record results in ppm from instrument readout.

b. Calculation:

Lead (ppm) = concentration readout (ppm) x dilution factor

29.65 FREE FLUOBORIC ACID.

a. Procedure.

(1) Pipet a 10 mL sample into a 400-mL beaker.

(2) Add 250 mL of distilled water.

(3) Titrate very slowly and with vigorous agitation with standard (1.0 N) potassium hydroxide solution until the first permanent white cloudiness appears.

b. Calculation:

Fluoboric acid (g/L) = [mL (KOH) x N(KOH) x 6.5] – 9.75

29.66 PHYSICAL TESTS.

29.66.1 Quality Conformance Specimen Preparation. When the plated articles are of such form, size, shape, and value as to prohibit their use or are not readily adaptable to a quality conformance test, tests shall be made by the use of separate specimens plated concurrently with the articles represented. Unless otherwise specified, the separate specimens shall be of a basis metal equivalent to that of the article represented. EQUIVALENT basis metal includes chemical composition, grade, condition, and finish of surface prior to the plating. Conditions affecting the plating of the specimen, including the spacing, plating media, bath agitation, temperature, etc. in respect to other objects being plated shall correspond as nearly as possible to those affecting the significant surfaces of the articles represented. Separate specimens shall not be used for thickness measurement, unless the necessity of their use has been demonstrated.

29.66.2 Specimen Criteria.

a. Specimens for Thickness and Adhesion Tests – if separate specimens for thickness and adhesion tests are required, they shall be strips approximately 25 mm (1 inch) wide, 102 mm (4 inches) long, and 1 mm (0.04 inch) thick.

b. Specimens for Corrosion Resistance Tests – if separate specimens for corrosion resistance tests are required, they shall be panels approximately 152 mm (6 inches) long, 102 mm (4 inches) wide, and 1 mm (0.04 inch) thick.

29.66.3 Test.

a. Thickness

(1) For nondestructive measuring of plating thickness, procedures in accordance with ASTM B117 (Salt Spray (Fog) Apparatus, Operating), ASTM B499 (magnetic test), ASTM B244 (eddy current), ASTM B567 (test by beta radiation backscatter principle), or ASTM B568 (X-ray spectrometry) may be used. For destructive

measuring of plating thickness, procedures in accordance with ASTM B487 (microscopic) or ASTM B504 (coulometric) may be used. In addition to the above, the other procedures embodied in AIA/NAS NASM 1312, Test 12 (NASM 1312-12) may be used for thickness measurement of plated fastener hardware.

(2) Selected samples shall be inspected and the plating thickness measured on several significant surfaces, which can be touched by a sphere 19 mm (¾ inch) in diameter. The minimum thickness of the electrodeposit shall not be less than 70% of the minimum average thickness stipulated in Table 29-4.

The part or article shall be considered nonconforming if one or more measurements fail to meet the minimum allowable thickness.

b. Adhesion – adhesion may be determined by scraping the surface or shearing with a sharp edge, knife, or razor through the plating down to the basis metal and examining at a magnification of approximately 4 diameters. The plating shall show no separation from the basis metal or from any underplating at the interface, nor shall any underplate show separation from the basis metal at the interface. Alternately, the article or specimen may be clamped in a vice and the projecting portion bent back and forth until rupture occurs. If the edge of the ruptured plating can be peeled back or if separation between the plating and the basis metal can be seen at the point of rupture when examined at 4 diameters magnification, adhesion is not satisfactory. The formation of cracks in the plating caused by rupture of the basis metal, the underplate or combination of both which do not result in flaking, peeling, or blistering of the plating shall not be cause for rejection.

c. Corrosion Resistance – the salt spray test shall be made in accordance with ASTM B117, using a 5% sodium chloride solution. Salt spray exposure times will be stated in Table 29-5.

The sample will be considered nonconforming to this requirement if:

(1) There is a formation of more than 6 rust spots per 9.29 dm^2(ft^2) of area plated: or

(2) There is a formation of more than 2 rust spots per 3.07 dm^2(1/3 ft^2): or

(3) There is a formation of any rust spot larger than 1.6 mm (1/16 inch) in diameter regardless of total area of plated surface.

Table 29-4. Thickness of Lead Coating

Specified Thickness		Minimum Allowable Thickness (70%)	
Micrometers	Inches	Micrometers	Inches
6	0.00025	4.2	0.000175
13	0.0005	9.1	0.00035
25	0.001	17.5	0.0007

Table 29-5. Salt Spray Exposure Times (Hours)

Specified Plating Thickness		
Micrometers	Inches	Exposure Time
6	0.00025	24
13	0.0005	48
25	0.001	96

TEST METHOD 24 — LEAD-TIN-ANTIMONY PLATING SOLUTION

29.67 METALLIC LEAD DETERMINATION.

a. Procedure.

(1) Pipet a 5 mL filtered sample into a 250-mL beaker.

(2) Add 150 mL of distilled water.

(3) Heat to boiling.

(4) Add (1:4) sulfuric acid until precipitation of lead sulfate is complete, then add 1 mL in excess.

(5) Allow precipitate to settle and cool to room temperature.

(6) Filter through a weighed 3001 Selas crucible.

(7) Wash precipitate with cold (1:49) sulfuric acid.

(8) Dry in oven at 102° – 121°C (215° – 250°F) then ignite for 1 hour at 427° – 454°C (800° – 850°F).

b. Calculation:

Lead metal (g/L) = wt ($PbSO_4$) x 136.65

29.68 METALLIC ANTIMONY DETERMINATION.

a. Procedure.

(1) Pipet a 5 mL filtered sample into a 500-mL Erlenmeyer flask.

(2) Add 5 grams potassium bisulfate.

(3) Add 15 mL concentrated sulfuric acid.

(4) Heat to dense fumes of SO_3. Continue heating until the solution is colorless and the precipitate is white.

(5) Cool.

(6) Add 6 mL of distilled water.

(7) Add 25 mL of concentrated hydrochloric acid.

(8) Boil solution gently with constant agitation for 3 minutes.

(9) Add 125 mL of distilled water.

(10) Cool to approximately 15°C (60°F).

(11) Titrate with standard potassium permanganate to a faint pink end-point which lasts for 30 seconds.

b. Calculation:

Antimony metal (g/L) = mL ($KMNO_4$) x $\frac{\text{Sb factor x 1000 x 1.01}}{5}$

To determine Sb factor:

Weigh 0.1 grams of pure antimony and transfer into a 500-mL flask. Continue with Step a(2).

$$\text{Sb factor} = \frac{\text{wt of pure antimony}}{\text{mL } (KMNO_4) \text{ to titrate sample}}$$

29.69 METALLIC TIN DETERMINATION.

a. Procedure.

(1) Use the solution from Paragraph 29.68, Step a(11).

(2) Add 60 mL of concentrated hydrochloric acid.

(3) Add 1 gram of antimony powder.

(4) Boil gently 10 – 15 minutes.

(5) Insert a stopper with tube. Place lower end of tube into a 300-mL beaker containing 250 mL saturated sodium bicarbonate solution.

(6) Cool solution in a water bath.

(7) Remove stopper.

(8) Add 5 mL starch indicator solution.

(9) Immediately titrate with standard potassium iodine solution to a permanent blue end-point.

b. Calculation:

Tin metal (g/L) = mL (KI used) x 0.596

29.70 FREE FLUOBORIC ACID.

a. Procedure.

(1) Pipet a 10 mL filtered sample into a 400-mL beaker.

(2) Add 250 mL of distilled water.

(3) Titrate very slowly with vigorous agitation with standard 1N potassium hydroxide solution to the first permanent white cloudiness.

b. Calculation:

Fluoboric acid (g/L) = [mL (KOH) x N(KOH) x 6.5] – 9.75

TEST METHOD 25 — ZINC PLATING SOLUTION

29.71 ZINC METAL DETERMINATION.

a. Procedure.

(1) Pipet a 5 mL sample into a 250-mL beaker.

(2) Under a hood, add 12 mL of concentrated hydrochloric acid.

(3) Heat to boiling.

(4) Cautiously add 125 mL of distilled water.

(5) Add 20 mL of (1:4) ammonium chloride.

(6) Heat near boiling.

(7) Titrate with standard potassium ferrocyanide until a drop of the solution gives a faint brown coloration when transferred to a drop of uranium acetate solution on a porcelain spot plate.

b. Calculation:

Zinc metal (g/L) = mL (K_4 $F_e(CN)_6$) x factor

29.71.1 To Determine Zn Factor.

a. Procedure.

(1) Weigh out exactly 2 grams of pure zinc and transfer it to a 100-mL volumetric flask.

(2) Dissolve the zinc in 1:1 hydrochloric acid and dilute to exactly 100 mL with distilled water.

(3) Pipet a 10 mL aliguot into a 400-mL beaker.

(4) Add 125 mL of distilled water.

(5) Add 20 mL of 25% ammonium chloride solution.

(6) Heat to near boiling.

(7) Titrate with standard potassium ferrocyanide solution until a drop of the solution gives a faint brown coloration when transferred to a drop of uranium acetate solution on a white porcelain spot plate.

b. Calculation of Factor:

$$\text{Factor} = \frac{\text{wt of zinc used x 100}}{\text{mL of } (K_4F_e\ (CN)_6 \text{ x } 7.5}$$

29.72 FREE SODIUM CYANIDE DETERMINATION.

a. Procedure.

(1) Pipet a 10 mL sample into a 250-mL beaker.

(2) Add 100 mL of distilled water and warm.

(3) While stirring, add 25 mL of 10% barium nitrate solution.

(4) Allow to settle.

(5) Filter and wash the precipitate 3 times with hot water, collect the filtrate in a 400-mL beaker.

(6) To the filtrate, add 5 mL of 10% potassium iodide indicator solution.

(7) Titrate with standard silver nitrate to a faint turbidity.

b. Calculation:

Sodium cyanide (g/L) = mL (A_g NO_3) x 0.983

29.73 SODIUM HYDROXIDE DETERMINATION.

a. Procedure.

(1) Pipet a 10 mL sample into a 250-mL Erlenmeyer flask.

(2) Add 10 mL of distilled water.

(3) Add 1 gram of sodium cyanide.

(4) Add 2 mL of La Motte sulfo-orange indicator solution.

(5) Titrate with standard 1.0N hydrochloric acid to a yellow end-point.

b. Calculation:

Sodium hydroxide (g/L) = mL (HCl) x N(HCl) x 4.01

29.74 SODIUM CARBONATE DETERMINATION.

a. Procedure.

(1) Pipet a 10 mL sample into a 250-mL beaker.

(2) Add approximately 80 mL of distilled water and warm solution.

(3) Add 10% barium nitrate ($Ba(NO_3)2$ solution while stirring, until no more precipitate forms. Allow to settle.

(4) Filter, adding a few drops of $Ba(NO_3)2$ to the first portion of filtrate to determine whether precipitation is complete.

(5) Wash precipitate with hot water.

(6) Transfer the filter paper and precipitate to the original beaker.

(7) Add 50 mL of distilled water.

(8) Add 4 – 5 drops of methyl orange indicator.

(9) Titrate with 1.0N hydrochloric acid to a faint permanent pink end-point.

b. Calculation:

Sodium carbonate (g/L) = mL (HCl) x N(HCl) x 5.3

29.75 PHYSICAL TESTS.

29.75.1 Quality Conformance Specimen Preparation. When the plated articles are of such form, size, shape, and value as to prohibit their use or are not readily adaptable to a quality conformance test, tests shall be made by the use of separate specimens plated concurrently with the articles represented. The separate specimens shall be of a basis metal equivalent to that of the article represented. EQUIVALENT basis metal includes chemical composition, grade, condition, and finish of surface prior to plating. Conditions affecting the plating of specimens, including the spacing, plating media, bath agitation, temperature, etc. in respect to other objects being plated shall correspond as nearly as possible to those affecting the significant surfaces of the articles represented. Separate specimens shall not be used for thickness measurements, unless the necessity of their use has been demonstrated.

29.75.2 Specimen Criteria.

a. Specimens for Thickness and Adhesion Tests – if separate specimens for thickness and adhesion are required, they shall be strips approximately 25 mm (1 inch) wide, 102 mm (4 inches) long, and 1 mm (0.04 inch) thick.

b. Specimens for Corrosion Resistance Tests – if separate specimens for corrosion resistance tests are required, they shall be panels not less than 254 mm (10 inches) long, 76 mm (3 inches) wide, and approximately 1 mm (0.04 inch) thick.

c. Specimens for Embrittlement-Relief – separate specimens for embrittlement-relief shall be round notched specimens with axis of the specimen (load direction) perpendicular to the short transverse grain flow direction. The configuration shall be in accordance with Figure 8 of ASTM E8 for standard round specimens. Specimens shall have a 60° V-notch located approximately at the center of the gage length. The cross-section area at the root of the Vee shall be approximately equal to half the area of the full cross-section area of the specimens reduced section. The Vee shall have a 0.254 ± 0.0127 mm (0.010 ± 0.0005 inch) radius of curvature at the base of the notch.

29.75.3 Tests.

a. Thickness – for nondestructive measuring of plating thickness, procedures in accordance with ASTM B117 (Salt Spray (Fog) Apparatus, Operating), ASTM B499 (magnetic test), ASTM B244 (eddy current), ASTM B567 (beta radiation backscatter), or ASTM B568 (X-ray spectrometry) may be used. For destructive measuring of plating thickness, procedures in accordance with ASTM B487 (microscopic) or ASTM B504 (coulometric) may be used. In addition to the above, the other procedures embodied in AIA/NAS NASM 1312, Test 12 (NASM 1312-12) may be used for thickness measurements of plated fastener hardware. Thickness measurements of zinc platings shall be made after application and removal of required supplementary coating. The chromate film can be removed by using a very mild abrasive (a paste of levigated alumina rubbed on with the finger). The phosphate coating may be removed by a 28% ammonia solution without attack on the zinc plating. Each sample selected shall be inspected and the plating thickness measured in several places on each sample at which the plating would be expected to be minimum. If the minimum plating thickness on any article is less than 70% of the specified thickness, the plating shall be considered as nonconforming to this requirement.

b. Adhesion – adhesion may be determined by scraping the surface or sheaving with a sharp edge, knife, or razor through the plating down to the basis metal and examining at a magnification of approximately 4 diameters. The plating shall show no separation from the basis metal or from any underplating at the interface, nor shall any underplate show separation from the basis metal at the interface. Alternately the article or specimen may be clamped in a vise and the projecting portion bent back and forth until rupture occurs. If the edge of the ruptured plating can be peeled back or if separation between the plating and the basis metal can be seen at the point of rupture when examined at 4 diameters magnification, adhesion is not satisfactory. The formation of cracks in the plating caused by rupture of the basis metal, the underplate, or combination of both which do not result in flaking, peeling, or blistering of the plating shall not be cause for rejection.

c. Corrosion Resistance – salt spray test shall be conducted in accordance with ASTM B117 (salt

spray test). To secure uniformity of results, zinc plating which has received a chromate treatment shall be aged at room temperature for 24 hours before subjection to the salt spray. The chromate treated zinc plated specimens will then be subjected to 96 hours of continuous exposure to salt spray. Phosphate treated zinc plated specimen will be subjected to 36 hours and zinc plated specimen with no supplementary coating shall be exposed for 192 hours of continuous salt spray exposure. The appearance of corrosion products visible to the unaided eye at normal reading distance shall be cause for rejection, except that corrosion products at the edges of the article shall not constitute failure.

d. Embrittlement-Relief.

(1) Four round notched transverse 4340 steel specimens (SAE AMS-S-5000) from 4 separate heats, heat treated to a tensile strength of 260,000 – 280,000 psi shall be prepared for plating. The preparation of the specimen shall correspond as nearly as possible to the preparation of production articles. During plating, the specimens shall be mounted symmetrically on a rack by themselves. All areas of the rack except the contact area shall be coated with a suitable maskant. An ammeter, having a sensitivity of 0.02 amperes or better, shall be connected between the specimen rack and cathode bar. The specimens shall be plated at normal plating current density for 10 minutes. After plating, the specimens shall be baked @ 191° ± 14°C (325° ± 25°F) for 23 hours. The baking operation shall be initiated within 4 hours of completion of plating. After cooling, the specimens will be given a Type II chromate coating.

(2) The specimens will be subjected to a static load equal to 75% of the ultimate notched tensible strength of the material for 200 hours.

(3) Upon completion of the 200 hours of static loading, the specimens shall be examined for cracks and fracture. The process shall be considered satisfactory if all specimens show no indication of cracks or fracture.

e. Embrittlement Test (Alternate Method) – embrittlement may be tested by the use of the Boeing Hydrogen Detection instrument or the Lawrence Hydrogen Detection instrument. Operation, calibration, plating, and evaluation of results shall be in accordance with the manufacturer's instructions.

TEST METHOD 26 — GOLD PLATING SOLUTION

29.76 GOLD METAL DETERMINATION.

a. Procedure.

(1) Pipet a 10 mL sample into a 250-mL beaker.

(2) Under a hood, add 5 mL of concentrated nitric acid (HNO_3) and 5 mL of concentrated hydrochloric acid (HCl).

(3) Evaporate to near dryness.

(4) Cool.

(5) Add 5 mL of concentrated hydrochloric acid and heat to near dryness again. Continue Steps (4) and (5) until no brown fumes are given off during evaporation.

(6) Add 20 mL of distilled water.

(7) Boil 2 – 3 minutes.

(8) Cool.

(9) Add 150 mL of distilled water.

(10) Add 15 mL of 30% potassium iodide (KI) solution.

(11) Add 5 mL of starch indicator solution.

(12) Titrate with standard (0.01N) sodium thiosulfate ($Na_2S_2O_3$) until the blue color disappears.

(13) Back titrate with standard (0.01N) potassium iodide (KI) solution until the blue color reappears.

b. Calculation:

Gold metal (g/L) = [mL ($Na_2S_2O_3$) x N ($Na_2S_2O_3$)] – [mL (KI) x N(KI)] x 10.44

29.77 FREE POTASSIUM CYANIDE DETERMINATION.

a. Procedure.

(1) Pipet a 10 mL sample into a 250-mL Erlenmeyer flask.

(2) Add 80 mL of distilled water.

(3) Add 5 mL of 10% potassium iodide (KI) solution.

(4) Titrate with standard (0.1N) silver nitrate ($AgNO_3$) to a faint yellowish turbidity.

b. Calculation:

Free potassium cyanide (g/L) = mL ($AgNO_3$) x 9.98

29.78 POTASSIUM CARBONATE DETERMINATION.

a. Procedure.

(1) Pipet a 10 mL sample into a 250-mL beaker.

(2) Add approximately 80 mL of distilled water and warm solution.

(3) Add 10% barium nitrate ($Ba(NO_3)2$ solution while stirring, until no more precipitate forms. Allow to settle.

(4) Filter, adding a few drops of $Ba(NO_3)2$ to the first portion of filtrate to determine whether precipitation is complete.

(5) Wash precipitate with hot water.

(6) Transfer the filter paper and precipitate to the original beaker.

(7) Add 50 mL of distilled water.

(8) Add 4 – 5 drops of methyl orange indicator.

(9) Titrate with 1.0N hydrochloric acid (HCl) to a faint permanent pink end-point.

b. Calculation:

Potassium carbonate (g/L) = mL (HCl) x N(HCl) x 9.75

29.79 PHYSICAL TESTS.

29.79.1 Quality Conformance Specimen Preparation. When the plated articles are of such form, size, shape, and value as to prohibit their use or are not readily adaptable to a quality conformance test, tests shall be made by the use of separate specimens plated concurrently with the articles represented. The separate specimens shall be of a basis metal equivalent to that of the article represented. EQUIVALENT basis metal includes chemical composition, grade, condition, and finish of surface prior to plating. Conditions affecting the plating of specimens, including the spacing, plating media, bath agitation, temperature, etc. in respect to other objects being plated shall correspond as nearly as possible to those affecting the significant surfaces of the articles represented. Separate specimens shall not be used for thickness measurements, unless the necessity of their use has been demonstrated.

29.79.2 Specimen Criteria.

a. Specimens for Thickness, Adhesion, Heat Resistance, and Solderability Tests – if separate specimens for thickness, adhesion, heat resistance and solderability tests are required, they shall be strips approximately 25 mm (1 inch) wide, 102 mm (4 inches) long, and 1 mm (0.04 inch) thick.

b. Specimens for Hardness Test – if separate specimens for hardness test are required, they shall be strips approximately 12.5 mm (0.5 inch) wide, 25 mm (1 inch) long, and 1 mm (0.04 inch) thick.

c. Specimens for Embrittlement-Relief – Separate specimens for embrittlement-relief shall be round notched specimens with the axis of the specimen (load direction) perpendicular to the short transverse grain flow direction. The configuration shall be in accordance with Figure 8 of ASTM E8 for standard round specimens. Specimens shall have a 60° V-notch located approximately at the center of the gage length. The cross-section area at the root of the Vee shall be approximately equal to half the area of the full cross-section area of the specimens reduced section. The Vee shall have a 0.254 ± 0.0127 mm (0.010 ± 0.0005 inch) radius of curvature at the base of the notch.

29.79.3 Test.

a. Thickness – thickness measurements may be made by any suitable method provided the specific method and equipment used shall be such that the coating thickness will be determined within ±10% of its true thickness. The following methods may be used as applicable: for nondestructive measuring of plating thickness, procedures in accordance with ASTM B117 (Salt Spray (Fog) Apparatus, Operating), ASTM B499 (magnetic test), ASTM B244 (eddy current), ASTM B567 (beta radiation backscatter), or ASTM B568 (X-ray spectrometry) may be used. For destructive measuring of plating thickness, procedures in accordance with ASTM B487 (microscopic) or ASTM B504 (coulometric) may be used. In addition to the above, the other procedures embodied in AIA/NAS NASM 1312, Test 12 (NASM 1312-12) may be used for plated fastener hardware. The plated thickness shall be measured on several different significant surfaces. Significant surfaces shall be any surfaces of the article that can be touched by a sphere 19 mm (0.75 inch) in diameter. The minimum thickness of deposited gold shall be as stated on the drawing or instructions on the individual item. The plating on nonsignificant, nonfunctional surfaces shall be of sufficient thickness to ensure plating continuity and uniform appearance. The coating shall be considered nonconforming if the above criteria is not met.

b. Adhesion – adhesion may be determined by scraping the surface or sheaving with a sharp edge, knife, or razor through the plating down to the basis metal and examining at a magnification of approximately 4 diameters. The plating shall show no separation from the basis metal or from any

underplating at the interface, nor shall any underplate show separation from the basis metal at the interface. Alternately the article or specimen may be clamped in a vise and the projecting portion bent back and forth until rupture occurs. If the edge of the ruptured plating can be peeled back or if separation between the plating and the basis metal can be seen at the point of rupture when examined at 4 diameters magnification, adhesion is not satisfactory. The formation of cracks in the plating caused by rupture of the basis metal, the underplate, or combination of both which do not result in flaking, peeling, or blistering of the plating shall not be cause for rejection. An alternate adhesion test may be used. In this test, the articles are placed in an oven and baked at 121° – 150°C (250° – 300°F) for 1 hour. After removal and cooling, the surface of the article shall be examined at 4 diameters magnification for evidence of flaking, peeling, or blistering. If such evidence is present, the plating shall be considered nonconforming to the requirement.

c. Heat Resistance – gold plated articles shall be heated to 260° ± 14°C (500° ± 25°F) then allowed to remain at that temperature for not less than 30 minutes. After removing and cooling, the plated parts shall show no blistering, discoloration, or visible white or crystalline film. Any evidence of the above will render the plating nonconforming to this requirement.

d. Solderability – the gold plated sample shall be prepared and coated in accordance with Method 208 of MIL-STD-202. The specimens shall then be subjected to the bending and cutting test as specified in Step b. If the solder exhibits flaking or peeling as the result of the adhesion test, the plating shall be considered as nonconforming to this requirement.

e. Embrittlement Test.

(1) Four round notched 4340 steel specimens from 4 separate heats, heat treated to a tensile strength of 260,000 – 280,000 psi, shall be prepared. The specimens shall be mounted symmetrically on a rack by themselves with all areas of the rack except the contact points coated with a suitable maskant. Conditions affecting the plating of the specimens, including the spacing, plating media, bath agitation, temperature, and cleaning operations shall correspond as nearly as possible to those affecting the plating of production items. The specimens shall be plated at 2 amps per square inch for 3 hours then baked for 23 hours at 191° ± 14°C (375° ± 25°F) within 4 hours of removal from the bath.

(2) The specimens shall be subjected to a static loading at 75% of the ultimate notched tensile strength for a duration of 200 hours.

(3) After completion of the static testing, the specimens shall be examined for cracks or fracture. Any evidence of cracks or fracture will be cause for rejection.

f. Embrittlement Test (Alternate Method) – embrittlement may be tested by the use of the Boeing Hydrogen Detection instrument or the Lawrence Hydrogen Detection instrument. Operation, calibration, plating, and evaluation of results shall be in accordance with the manufacturer's instructions.

TEST METHOD 27 — RHODIUM PLATING SOLUTION

29.80 RHODIUM METAL DETERMINATION.

a. Procedure.

(1) Pipet a 25 mL sample of solution into a 400-mL beaker.

(2) Add 150 mL of distilled water. If rhodium salts occur add 2 – 3 mL concentrated sulfuric acid to dissolve the precipitate.

(3) Warm the solution to 43° – 49°C (110° – 120°F).

(4) Electrolyze at 0.2 – 0.5 amps using a weighed platinum gauge electrode as the cathode and a platinum anode. Continue electrolysis until the solution is water clear.

(5) Rinse the cathode thoroughly with distilled water, then alcohol.

(6) Dry.

(7) Weigh.

b. Calculation:

Rhodium metal (g/L) = wt (Rh in g) x 1135.5

29.81 SULFURIC ACID DETERMINATION.

a. Procedure.

(1) Pipet a 10 mL sample into a 250-mL Erlenmeyer flask.

(2) Add 80 mL of distilled water.

(3) Add 2 – 3 drops of methyl orange indicator.

(4) Titrate with standard (0.1N) sodium hydroxide to an orange end-point.

b. Calculation:

Sulfuric acid (g/L) = mL (NaOH) x (NaOH) x 4.93

29.82 PHYSICAL TESTS.

29.82.1 Quality Conformance Specimen Preparation. When the plated articles are of such form, size, shape, and value as to prohibit their use or are not readily adaptable to a quality conformance test, tests shall be made by the use of separate specimens plated concurrently with the articles represented. Unless otherwise specified, the separate specimens shall be of a basis metal equivalent to that of the article represented. EQUIVALENT basis metal includes chemical composition, grade, condition, and finish of surface prior to plating. Conditions affecting the plating of the specimen, including the spacing, plating media, bath agitation, temperature, etc. in respect to other objects being plated shall correspond as nearly as possible to those affecting the significant surfaces of the articles represented. Separate specimens shall not be used for thickness measurements, unless the necessity of their use has been demonstrated.

29.82.2 Specimen Criteria.

a. Specimens for Thickness and Adhesion Tests – if separate specimens for thickness and adhesion tests are required, they shall be strips approximately 25 mm (1 inch) wide, 102 mm (4 inches) long, and 1 mm (0.04 inch) thick.

b. Specimens for Embrittlement-Relief Tests – separate specimens for embrittlement-relief tests shall be round notches specimens with the axis of the specimen (load direction) perpendicular to the short transverse grain flow direction. The configuration shall be in accordance with Figure 8 of ASTM E8 for standard round specimens. Specimens shall have a 60° V-notch located approximately at the center of the gage length. The cross-section area at the root of the Vee shall be approximately equal to half the area of the full cross-section area of the specimen's reduced section. The Vee shall have a 0.254 ± 0.0127 mm (0.010 ± 0.0005 inch) radius of curvature at the base of the notch.

29.82.3 Tests.

a. Thickness.

(1) For nondestructive measuring of plating thickness, procedures in accordance with ASTM B117 (Salt Spray (Fog) Apparatus, Operating), ASTM B499 (magnetic test), ASTM B244 (eddy current), ASTM B567 (test by beta radiation backscatter principle) or ASTM B568 (X-ray spectrometry) may be used. For destructive measuring of plating thickness, procedures in accordance with ASTM B487 (microscopic) or ASTM B504 (coulometric) may be used. In addition to the above, the other procedures embodied in AIA/NAS NASM 1312, Test 12 (NASM 1312-12) may be used for thickness measurement of plated fastener hardware.

(2) For plating thicknesses less than 0.0001 inch, microscopic, magnetic, or eddy current methods should not be used, unless otherwise specified, the plating shall cover all surfaces including corners, recesses, and roots of threads. The minimum plating thickness shall be as specified on the drawing or as stated on the individual article on all significant surfaces which can be touched by a sphere 19 mm (0.75 inch) in diameter. The plating on nonsignificant surfaces shall be of sufficient thickness to ensure plating continuity and uniform appearance. If one or more of the measurements on significant surfaces is below the minimum stated thickness the plating shall be considered as nonconforming to the requirement.

b. Adhesion – adhesion may be determined by scraping the surface or shearing with a sharp edge, knife, or razor through the plating down to the basis metal and examining at a magnification of approximately 4 diameters. The plating shall show no separation from the basis metal or from any underplating at the interface, nor shall any underplate show separation from the basis metal at the interface. Alternately, the article or specimen may be clamped in a vice and the projecting portion bent back and forth until rupture occurs. If the edge of the ruptured plating can be peeled back or if separation between the plating and the basis metal can be seen at the point of rupture when examined at 4 diameters magnification, adhesion is not satisfactory. The formation of cracks in the plating caused by rupture of the basis metal, the underplate, or combination of both which do not result in flaking, peeling, or blistering of the plating shall not be cause for rejection.

c. Embrittlement Test.

(1) Four round notched 4340 steel specimens from 4 separate heats, heat treated to a tensile strength of 260,000 – 280,000 psi, shall be prepared. The specimens shall be mounted symmetrically on a rack by themselves with all areas of the rack except the contact points coated with a suitable maskant. Conditions affecting the plating of the specimens, including the spacing, plating media, bath agitation, temperature, and

cleaning operations shall correspond as nearly as possible to those affecting the plating of production items. The specimens shall be plated at 2 amps per square inch for 3 hours then baked for 23 hours at 191° ± 14°C (375° ± 25°F) within 4 hours of removal from the bath.

(2) The specimens shall be subjected to a static loading at 75% of the ultimate notched tensile strength for a duration of 200 hours.

(3) After completion of the static testing, the specimens shall be examined for cracks or fracture. Any evidence of cracks or fracture will be cause for rejection.

d. Embrittlement Test (Alternate Method) – embrittlement may be tested by the use of the Boeing Hydrogen Detection instrument or the Lawrence Hydrogen Detection instrument. Operation, calibration, plating, and evaluation of results shall be in accordance with the manufacturer's instructions.

TEST METHOD 28 — INDIUM PLATING SOLUTION

29.83 INDIUM METAL DETERMINATION.

a. Procedure.

(1) Pipet a 5 mL sample into a 400-mL beaker.

(2) Dilute to 200 mL with distilled water.

(3) Add 1:1 ammonium hydroxide until just alkaline to litmus.

(4) Heat to boiling.

(5) Remove from heat and allow precipitate to settle.

(6) Filter through Whatman #42 filter paper and wash precipitate 8 times with hot water.

(7) Transfer the paper and precipitate to a tarred porcelain crucible.

(8) Place the crucible in a furnace and ignite paper by heating it to 700°C for 30 minutes.

(9) Cool in desiccator.

(10) Weigh.

b. Calculation:

Indium metal (g/L) = wt (IN_2 O_3) in grams x 115.75

29.84 SULFATE DETERMINATION.

a. Procedure.

(1) Pipet a 10 mL sample into a 400-mL beaker.

(2) Add 150 mL of distilled water.

(3) Add 5 mL of concentrated hydrochloric acid.

(4) Heat to boiling.

(5) While boiling, add 10 mL of 10% barium chloride solution.

(6) Boil for 5 minutes.

(7) Allow precipitate to settle at least 3 hours.

(8) Heat solution to boiling and filter through Whatman #40 filter paper.

(9) Wash the beaker and filter paper with boiling water containing a few drops of hydrochloric acid.

(10) Transfer the precipitate and filter paper to a tarred porcelain crucible.

(11) Place the crucible in a furnace and ignite paper by heating to 700°C for 30 minutes.

(12) Cool in a desiccator.

(13) Weigh.

b. Calculation:

Total sulfate (g/L) = wt ($BaSO_4$) in grams x 41.4

TEST METHOD 29 — NICKEL PLATING SOLUTION

29.85 NICKEL METAL DETERMINATION.

a. Procedure.

(1) Pipet a 1 mL sample into a 250-mL Erlenmeyer flask.

(2) Add approximately 80 mL of distilled water.

(3) Add 10 mL concentrated ammonium hydroxide.

(4) Add 1 gram of muroxide indicator.

(5) Titrate with standard 0.05 M EDTA solution to a purple end-point.

b. Calculation:

Nickel (g/L) = mL (EDTA) x 3.37

29.85.1 Nickel Metal (Alternate Method).

a. Procedure.

(1) Pipet a 5 mL sample into a 250-mL Erlenmeyer flask.

(2) Add 25 mL of citric acid.

(3) Add 50 mL of distilled water.

(4) Add ammonium hydroxide dropwise, until the solution turns a clear blue.

(5) Add 2 mL of (0.1N) silver nitrate solution. If solution becomes turbid, add ammonium hydroxide until solution turns clear again.

(6) Add 10 – 15 drops of 10% potassium iodide solution.

(7) Titrate with 0.5N sodium cyanide to a clear amber end-point.

b. Calculation:

Nickel (g/L) = [mL (NaCN) x N(NaCN) – (mL ($AgNO_3$) x N($AgNO_3$)] x 5.85

29.85.2 Nickel Metal by AAS (Optional Method).

a. Procedure.

(1) Set the AAS to standard conditions for nickel according to instrument manual.

(2) Pipet a 10 mL sample into a 50-mL volumetric flask, or any convenient 1:5 dilution ratio, and dilute to mark with deionized water. Distilled water may be used. Greater dilutions may be necessary on specific samples.

NOTE

Sample aliquots should be taken from plating solution while warm to prevent boric acid precipitation interference.

(3) With dilution water as a blank, optimize flame and burner head position with any nickel standard solution. Standardize AAS with appropriate concentrations of aqueous nickel standard solutions.

(4) Aspirate diluted sample directly and record results in ppm from instrument readout.

b. Calculation:

Nickel (ppm) = concentration readout (ppm) x dilution factor

29.86 CHLORIDE DETERMINATION.

a. Procedure.

(1) Pipet a 5 mL sample into a 250-mL Erlenmeyer flask.

(2) Add 80 mL of distilled water.

(3) Add 2 grams of sodium bicarbonate.

(4) Add 10 – 15 drops of 10% potassium chromate solution.

(5) Titrate with 0.1N silver nitrate solution to an orange-brown end-point.

b. Calculation:

Chloride (g/L) = mL ($AgNO_3$) x 0.713

29.87 BORIC ACID DETERMINATION.

a. Procedure.

(1) Pipet a 5 mL sample into a 250-mL beaker.

(2) Add mannitol to make a thick paste.

(3) Add 10 drops of bromo-cresol purple indicator.

(4) Titrate with 0.5N sodium hydroxide to a purple end-point.

b. Calculation:

Boric acid (g/L) = mL (NaOH) x 6.23

29.87.1 Boric Acid Optional AAS Method.

a. Procedure.

(1) Pipet a 5 mL sample of solution into a 100-mL volumetric and dilute to the mark with distilled water.

(2) Set the atomic absorption spectrophotometer to run Boron.

a. 33 ma

b. Slit 7

c. Wavelength 249.7

d. Signal – Abs

e. Mode – Cont

f. Background Correction – AA-BG

g. Int

h. Fuel – 25 – C_2N_2

i. Oxidant – 35 – Nitrous Oxide

(3) Optimize flame and burner head position with Boron standard solutions. Standardize instrument with appropriate concentrations in ppm Boron standard solutions.

(4) Aspirate diluted sample directly and record results in ppm from instrument readout.

b. Calculation:

Boric acid (oz/gal) = ppm (sample) x 0.015323
(g/L) = oz/gal x 7.5

29.88 PHYSICAL TESTS.

29.88.1 Quality Conformance Specimen Preparation. When the plated articles are of such form, size, shape, and value as to prohibit their use or are not readily adaptable to a quality conformance test, tests shall be made by the use of separate specimens plated concurrently with the articles represented. Unless otherwise specified, the separate specimens shall be of a basis metal equivalent to that of the article represented. EQUIVALENT basis metal includes chemical composition, grade, condition, and finish of surface prior to plating. Conditions affecting the plating of the specimen, including the spacing, plating media, bath agitation, temperature, etc. in respect to other objects being plated shall correspond as nearly as possible to those affecting the significant surfaces of the articles represented. Separate specimens shall not be used for thickness measurements, unless the necessity of their use has been demonstrated.

29.88.2 Specimens Criteria.

a. Specimens for Thickness and Adhesion Tests – if separate specimens for thickness and adhesion tests are required, they shall be strips approximately 25 mm (1 inch) wide, 102 mm (4 inches) long, and 1 mm (0.04 inch) thick.

b. Specimens for Corrosion Resistance Tests – if separate specimens for corrosion resistance tests are required, they shall be panels approximately 152 mm (6 inches) long, 102 mm (4 inches) wide, and 1 mm (0.04 inch) thick.

c. Specimens for Embrittlement-Relief Tests – separate specimens for embrittlement-relief tests shall be round notches specimens with the axis of the specimen (load direction) perpendicular to the short transverse grain flow direction. The configuration shall be in accordance with Figure 8 of ASTM E8 for standard round specimens. Specimens shall have a 60° V-notch located approximately at the center of the gage length. The cross-section area at the root of the Vee shall be approximately equal to half the area of the full cross-section area of the specimen's reduced section. The Vee shall have a 0.254 ± 0.0127 mm (0.010 ± 0.0005 inch) radius of curvature at the base of the notch.

29.88.3 Test.

a. Thickness.

(1) For nondestructive measuring of plating thickness, procedures in accordance with ASTM B117 (Salt Spray (Fog) Apparatus, Operating), ASTM B499 (magnetic test), ASTM B244 (eddy current), ASTM B567 (test by beta radiation backscatter principle) or ASTM B568 (X-ray spectrometry) may be used. For destructive measuring of plating thickness, procedures in accordance with ASTM B487 (microscopic) or ASTM B504 (coulometric) may be used. In addition to the above, the other procedures embodied in AIA/NAS NASM 1312, Test 12 (NASM 1312-12) may be used for thickness measurement of plated fastener hardware. Unless otherwise specified, the minimum plating thickness for corrosion protection on all significant surfaces shall be as specified on the drawing or on the individual part. SIGNIFICANT surfaces being defined as visible surfaces which can be touched by a sphere 19 mm (0.75 inch) in diameter. Minimum thickness on non-significant surfaces shall not be less than 70% of the specified minimum thickness.

(2) The minimum plating thickness for engineering plating shall be 0.003 inch on the finish part. This thickness requirement shall apply after all metal finishing operations have been completed.

(3) Plating thicknesses failing to meet the above criteria shall be considered as nonconforming to this requirement.

b. Adhesion – adhesion may be determined by scraping the surface or shearing with a sharp edge, knife, or razor through the plating down to the basis metal and examining at a magnification of approximately 4 diameters. The plating shall show no separation from the basis metal or from any underplating at the interface, nor shall any underplate show separation from the basis metal at the interface. Alternately, the article or specimen may be clamped in a vice and the projecting portion bent back and forth until rupture occurs. If the edge of the ruptured plating can be peeled back or if separation between the plating and the basis metal can be seen at the point of rupture when examined at 4 diameters magnification, adhesion is not satisfactory. The

formation of cracks in the plating caused by rupture of the basis metal, the underplate or combination of both which do not result in flaking, peeling, or blistering of the plating shall not be cause for rejection.

c. Embrittlement-Relief.

(1) Four round notched transverse 4340 steel specimens (SAE AMS-S-5000) from 4 separate heats, heat treated to a tensile strength of 260,000 – 280,000 psi shall be prepared for plating. The preparation of the specimen shall correspond as nearly as possible to the preparation of production articles. During plating, the specimens shall be mounted symmetrically on a rack by themselves. All areas of the rack except the contact area shall be coated with a suitable maskant. An ammeter, having a sensitivity of 0.02 amperes or better, shall be connected between the specimen rack and cathode bar. The specimens shall be plated at 0.25 A/dm^2 (35 ASF) for 3 hours. After plating, the specimens shall be baked @ 191° ± 14°C (375° ± 25°F) for 23 hours. The baking operation shall be initiated within 4 hours of completion of plating. After cooling, the specimens will be given a Type II chromate coating.

(2) The specimens will be subjected to a static load equal to 75% of the ultimate notched tensible strength of the material for 200 hours.

(3) Upon completion of the 200 hours of static loading, the specimens shall be examined for cracks and fracture. The process shall be considered satisfactory if all specimens show no indication of cracks or fracture.

d. Embrittlement Test (Alternate Method) – embrittlement may be tested by the use of the Boeing Hydrogen Detection instrument or the Lawrence Hydrogen Detection instrument. Operation, calibration, plating, and evaluation of results shall be in accordance with the manufacturer's instructions.

e. Surface Tension Determination.

(1) Procedure.

(a) Stop solution agitation.

(b) Immerse a 5-inch wire ring under the surface of the plating solution.

(c) Gradually withdraw the wire ring from the solution. If a film remains on the wire ring, the solution contains enough wetting agent.

(d) Repeat Steps e(1)(b) and (c) in different areas of the solution.

(2) Additions.

(a) Dissolve 25 grams of sodium laurel sulfate per 100 gallons of plating solution in a small quantity of warn distilled water.

(b) Add the prepared solution to the nickel plating bath.

(c) Allow solution to agitate for 1 hour.

(d) Repeat test procedure in Step e(1).

(e) Continue applications of sodium laurel sulfate until a film remains on the wire ring upon its withdrawal from the plating solution.

f. Plating Stress Determination – stress measurement procedure and determination shall be performed in accordance with manufacturer's instructions which accompany proprietary equipment.

TEST METHOD 30 — ALKALINE CLEANER (SODIUM HYDROXIDE AND TRISODIUM PHOSPHATE)

29.89 SODIUM HYDROXIDE AND TRISODIUM PHOSPHATE.

a. Procedure.

(1) Pipet a 10 mL sample into a 250-mL Erlenmeyer flask.

(2) Add 80 mL of distilled water.

(3) Add several drops of methyl orange indicator solution.

(4) Titrate with 0.5N hydrochloric acid to an amber end-point.

(5) Let this volume corrected to 1.0N be A.

(6) Add several boiling chips.

(7) Boil the solution for 5 minutes.

(8) Cool.

(9) Add several drops of phenolphthalein indicator solution.

(10) Back titrate with 0.5N sodium hydroxide to a pink end-point.

(11) Let this volume corrected to 1.0N be B.

b. Calculation:

Sodium hydroxide (g/L) = (A – 2B) x 4.01

Trisodium phosphate (g/L) = B x 16.43

TEST METHOD 31 — ALKALINE CLEANER (SODIUM HYDROXIDE, SODIUM METASILICATE, AND TRISODIUM PHOSPHATE)

29.90 TOTAL ALKALINITY AND SODIUM HYDROXIDE.

a. Procedure.

(1) Pipet a 10 mL sample into a 250-mL Erlenmeyer flask.

(2) Add 80 mL of distilled water.

(3) Add 2 – 3 drops of methyl orange indicator solution.

(4) Titrate with 1.0N hydrochloric acid to a red end-point.

(5) Add several boiling chips.

(6) Boil sample 5 minutes.

(7) Cool.

(8) Add 5 – 6 drops of phenolphthalein indicator.

(9) Back titrate with 1.0N sodium hydroxide solution to a pink end-point.

b. Calculation:

Total alkalinity (g/L) = mL (HCl) x N(HCl) x 4.99
Let this value = A
Sodium hydroxide (g/L) = mL (HCl) x N(HCl) x 3.68
Let this value = B
Trisodium phosphate (g/L) = mL (NaOH) x N(NaOH) x 8.55
Let this value = C
Sodium metasilicate (g/L) = A – (B + C)

TEST METHOD 32 — ALKALINE CLEANER FOR ALUMINUM

29.91 TRISODIUM PHOSPHATE AND SODIUM CARBONATE.

a. Procedure.

(1) Pipet a 10 mL sample into a 250-mL Erlenmeyer flask.

(2) Add 80 mL of distilled water.

(3) Add 2 – 3 drops of methyl orange indicator solution.

(4) Titrate with 1.0N sulfuric acid to a red end-point. Let this value corrected to 1N = A.

(5) Add several boiling chips.

(6) Boil solution for 5 minutes.

(7) Cool.

(8) Add 5 – 6 drops of phenolphthalein indicator solution.

(9) Back titrate with 1.0N sodium hydroxide to a pink end-point. Let this value corrected to 1N = B.

b. Calculation:

Sodium carbonate (g/L) = (A – 2B) x 5.31
Trisodium phosphate (g/L) = B x 16.43

TEST METHOD 33 — STRIP SOLUTION

29.92 SODIUM HYDROXIDE, TRISODIUM PHOSPHATE, AND SODIUM CYANIDE.

a. Procedure.

(1) Pipet a 10 mL sample into a 250-mL Erlenmeyer flask.

(2) Add 80 mL of distilled water.

(3) Add several drops of methyl orange indicator solution.

(4) Titrate with 0.5N hydrochloric acid to an amber end-point.

(5) Let this volume corrected to 1.0N = A.

(6) Add several boiling chips.

(7) Boil the solution for 5 minutes.

(8) Cool.

(9) Add several drops of phenolphthalein indicator solution.

(10) Back titrate with 0.5N sodium hydroxide to a pink end-point.

(11) Let this volume corrected to 1.0N = B.

(12) Pipet a 5 mL sample into another 250-mL Erlenmeyer flask.

(13) Add 80 mL of distilled water.

(14) Add 5 mL of 10% potassium iodide solution.

(15) Titrate with 0.1N silver nitrate to a faint yellow turbidity.

(16) Let this volume corrected to 1.0N = C.

b. Calculation:

Sodium cyanide (g/L) = C x 19.7
Trisodium phosphate (g/L) = B x 16.43
Sodium hydroxide (g/L) = (A – 2C – 2B) x 4.01

29.93 SODIUM CYANIDE.

a. Procedure.

(1) Pipet a 5 mL sample into a 250-mL Erlenmeyer flask.

(2) Add 80 mL of distilled water.

(3) Add 5 mL of 10% potassium iodide solution.

(4) Titrate with 0.1N silver nitrate to a faint permanent turbidity.

b. Calculation:

Sodium cyanide (g/L) = mL ($AgNO_3$) x 1.97

TEST METHOD 34 — ACID COPPER PLATING

29.94 METALLIC COPPER DETERMINATION.

a. Procedure.

(1) Pipet a 1 mL sample into a 250-mL Erlenmeyer flask.

(2) Add approximately 80 mL of distilled water.

(3) Add concentrated ammonium hydroxide (NH_4OH) until the solution is a dark blue color.

(4) Add ½ gram of Murexide indicator.

(5) Titrate with standard EDTA solution to a purple end-point.

b. Calculation:

Cu metal (g/L) = mL (EDTA used) x 3.23

29.94.1 Metallic Copper by AAS (Optional Method).

a. Procedure.

(1) Set the AAS to standard conditions for copper according to instrument manual.

(2) Pipet a 10 mL sample into a 50-mL volumetric flask, or any convenient 1:5 dilution ratio, and dilute to mark with deionized water. Distilled water may be used. Greater dilutions may be necessary on specific samples.

(3) With dilution water as a blank, optimize flame and burner head position with any copper standard solution. Standardize AAS with appropriate concentrations of aqueous copper standard solutions.

(4) Aspirate diluted sample directly and record results in ppm from instrument readout.

b. Calculation:

Copper (ppm) = concentration readout (ppm) x dilution factor

29.95 SULFURIC ACID DETERMINATION.

a. Procedure.

(1) Pipet a 10 mL sample into a 250-mL Erlenmeyer flask.

(2) Add approximately 80 mL of distilled water.

(3) Add 5 – 7 drops of methyl orange indicator solution.

(4) Titrate with standard 1N sodium hydroxide (NaOH) solution until the solution color changes from violet to pale green.

b. Calculation:

Sulfuric acid (g/L) = mL (NaOH) x N(NaOH) x 4.9

TEST METHOD 35 — TIN-FLUOBORATE PLATING

29.96 METALLIC TIN DETERMINATION.

a. Procedure.

(1) Pipet a 5 mL sample into a 250-mL Erlenmeyer flask.

(2) Add approximately 80 mL of distilled water.

(3) Add 20 mL of 20% hydrochloric acid.

(4) Add 3 – 5 mL of starch indicator solution.

(5) Titrate with 0.1N potassium iodine solution to a permanent blue end-point.

b. Calculation:

Stannate (g/L) = mL (KI used) x 0.596

29.97 FREE FLUOBORIC ACID.

a. Procedure.

(1) Pipet a 10 mL sample into a 250-mL Erlenmeyer flask.

(2) Titrate with 1.0N sodium hydroxide (NaOH) to a faint permanent turbidity.

b. Calculation:

Free fluoboric acid (g/L) = mL (NaOH) x N(NaOH) x 43.88

TEST METHOD 36 — IRIDITE 8P

29.98 IRIDITE 8P DETERMINATION.

a. Procedure.

(1) Pipet a 5 mL sample into a 250-mL Erlenmeyer flask.

(2) Add approximately 80 mL distilled water.

(3) Add approximately 1 gram of ammonium bifluoride.

(4) Add 5 mL of concentrated sulfuric acid.

(5) Add 10 mL of 10% potassium iodide indicator solution.

(6) Titrate with 0.1N sodium thiosulfate ($Na_2S_2O_3$) until the solution is a straw color.

(7) Add 3 – 5 mL starch indicator solution.

(8) Continue titration to a pale green end-point.

b. Calculation:

Iridite 8P (g/L) = mL ($Na_2S_2O_3$) x N ($Na_2S_2O_3$) x 7.65

TEST METHOD 37 — ALKALINE CLEANER (A-A-59260)

29.99 ALKALINE CLEANER (A-A-59260) DETERMINATION.

a. Procedure.

(1) Pipet a 2 mL sample of solution into a 250-mL Erlenmeyer flask.

(2) Add approximately 80 mL of distilled water.

(3) Add several drops of methyl orange indicator solution.

(4) Titrate with 0.5N hydrochloric acid (HCl) to a reddish end-point.

b. Calculation:

Strength (g/L) = mL (HCl) x N(HCl) x 28.44

TEST METHOD 38 — ALUMINUM ALLOY ETCHANT

29.100 ALUMINUM ALLOY ETCHANT DETERMINATION.

a. Procedure.

(1) Obtain a 50 mL sample of etchant solution and allow it to cool to room temperature.

(2) Add approximately 5 grams (½ teaspoon) of copper powder, stopper the jar, and shake it vigorously for about 1 minute.

(3) Allow the solid to settle.

(4) From the clear upper portion of the mixture, pipet a 5 mL sample into a 100-mL Erlenmeyer flask.

(5) Add 25 mL of distilled water.

(6) Add 6 drops of indigo indicator.

(7) Titrate with 1N sulfuric acid (H_2SO_4) to a blue end-point. Record number of mL required as N_1.

(8) Add 3 drops of phenolphthalein indicator to the same solution and again titrate with 1N H_2SO_4 until the color changes from purple to blue. Record number of mL required as N_2.

b. Rejuvenation.

(1) Using N_1 and N_2 and the attached Recommended Operating Ranges for Turcoform Etchant 9H Chart, Figure 22-7, find the intersection of the 2 values and adjust the etchant solution as indicated.

(2) A fresh bath will have an N_1 = 12.0 and N_2 = 4.0. To increase N_1 by 1 mL add approximately 0.08 lbs of Turcoform Etchant 9H per gallon of etchant solution. To increase N_2 by 1 mL add approximately 0.15 lbs of Turcoform Alketch Inhibitor per gallon of etchant solution.

(3) The use of Turcoform Alketch Inhibitor is an inexpensive way to add aluminum to the etchant

solution thereby increasing the N_2 value or SWEETENING the bath prior to etching. It need only be added to a fresh bath since the N_2 value increases as aluminum is dissolved in the etchant. To determine the amount of dissolved aluminum in pounds per gallon multiply the N_2 value by 0.04.

(4) A portion (25 – 50%) of the etchant solution should be discarded when the N_2 value reaches 17.5 – 20.0 (0.7 – 0.8 pounds per gallon of dissolved aluminum).

FOR EXAMPLE:

A fresh 1000 gallon bath has an N_1 of 12.0 and an N_2 of 4.0 (0.16 pounds per gallon of dissolved aluminum which comes from the Alketch Inhibitor). This corresponds to Point A in Figure 22-8.

Parts are then etched until 120 pounds of aluminum have been dissolved in this solution. The N_1 is now 9.4 and the N_2 is 7.0. This corresponds to Point B in Figure 22-8.

The bath is rejuvenated by adding 320 pounds of Turcoform Etchant 9H changing N_1 to 13.4. (The N_2 value remains essentially unchanged.) The bath condition is represented by Point C.

Points D through I are obtained by dissolving 120 pounds of aluminum each time and then adding 240, 320, and 320 pounds of Turcoform Etchant 9H.

When Point I is reached, parts are etched until the bath ceases to work efficiently. If 180 pounds of aluminum are dissolved, the bath condition will be represented by Point J. If 240 pounds of aluminum are dissolved, Point K will represent the bath condition. The bath may now be rejuvenated by dumping approximately 50% of the solution, and making the tank up to operating level with water. This reduces the values of both N_1 and N_2 by half, bringing the solution to Point L (or M if the solution was dumped at Point J). By adding 600 pounds of Turcoform Etchant 9H, the N_1value is raised to Point E and the etchant bath is ready for further use. Note that no Alketch Inhibitor is added after the initial charge. The cycle E to E is repeated indefinitely.

The above is a typical example of one way to control the etchant solution. The cycle, E to E, can be relocated so that the etchant solution may be controlled in any desired operating area.

Neglecting the original charge of both Turcoform Etchant 9H and Alketch Inhibitor which are needed only once, the ratio of Turcoform Etchant 9H to dissolve aluminum will vary from 3.5:1 – 2.5:1 depending on the dump point on Line I – K in Figure 22-8. The more aluminum dissolved on the final pass, the higher the etch bath efficiency.

In general, as N_1 increases:

(a) The specific gravity of the bath	increases
(b) The viscosity of the bath	increases
(c) The etch rate	increases
(d) The etch factor	increases slightly
(e) The surface smoothness	improves
(f) The end-grain pitting	is not affected

and as N_2 increases:

(a) The specific gravity of the bath	increases

TEST METHOD 39 — ETCHANT FOR FERROUS ALLOYS

29.101 FREE ACID DETERMINATION.

a. Procedure.

(1) Pipet a 5 mL sample of clear filtered etchant into a 255-mL polyethylene heat resistant beaker.

(2) Add 10 mL of 2M potassium oxalate.

(3) Add 30 mL of 7M potassium fluoride.

(4) Stir mixture.

(5) Heat to 82° – 88°C (180° – 190°F) in a water bath.

(6) Add 100 mL of methyl alcohol and stir.

(7) Leave beaker in hot water bath for at least 10 minutes.

(8) Add 10 – 20 drops of phenolphthalein indicator.

(9) Titrate with 1N NaOH until the pink color persists for a minimum of 30 seconds.

b. Calculation:

$$N(\text{free acid}) = \frac{\text{mL (NaOH)} \times \text{N(NaOH)}}{\text{5 (sample size)}}$$

29.102 PHOSPHATE DETERMINATION.

a. Procedure.

(1) Pipet a 3 mL sample of clean filtered etchant into a 250-mL beaker.

(2) Add 50 mL of perchloric acid, cover, and fume on the hot plate until the chromium is converted to orange dichromate, then fume 5 minutes excess.

(3) Cool and dilute with 50 mL of distilled water.

(4) Stir the mixture to dissolve the precipitate.

(5) Transfer the mixture to a 1-liter volumetric flask and dilute to the mark with distilled water.

(6) Pipet a 3 mL aliquot into a 100-mL volumetric flask and add 10 mL of 2.5% ammonium molybdate solution then 1 mL of 0.25% 1-amino-2-naphthol-4 sulfonic acid solution. Dilute to the mark with distilled water.

(7) Prepare a standard by treating a 10 mL aliquot of working standard (instead of the 3 mL etchant aliquot) according to Step (6).

(8) Allow both solutions to stand at least 20 minutes.

(9) Read in the spectrophotometer against water (wave length = 640 mμ).

b. Calculation:

$$\text{Moles (phosphate/liter)} = \frac{Rx}{Rs} \times 1.79$$

Where Rx = absorbance of etchant solution

Where Rs = absorbance of standard solution

29.103 IRON DETERMINATION.

a. Procedure.

(1) To 15 mL of 50% sulfuric acid in a 250-mL iodine flask, add 2 mL of etchant.

(2) Dilute to 125 mL with distilled water.

(3) Add ½ gram of sulfamic acid and mix well.

(4) Add 10 grams of potassium iodite, stopper, and swirl the flask to mix.

(5) Allow solution to set 10 minutes.

(6) Titrate with 0.1N sodium thiosulfate until the color fades.

(7) Add 3 – 5 mL of starch indicator solution.

(8) Continue titration to starch-iodine end-point.

(9) Determine the blank correction for this procedure by following Steps (1) through (8) within the addition of the 2 mL etchant sample. This correction is approximately 0.2 mL.

b. Calculation:

Iron (g/L) = (A – B) x 2.8

Where A = volume titrant required for etchant sample

Where A = volume titrant required for blank sample

29.104 NITRATE DETERMINATION.

a. Procedure.

(1) Pipet a 10 mL sample of etchant solution into a 100-mL volumetric flask and dilute to the mark with distilled water.

(2) Pipet a 10 mL aliquot into a 100-mL volumetric flask, add 10 mL of 50% sulfuric acid and dilute to the mark with distilled water.

(3) Pipet a 25 mL aliquot into a 250-mL Erlenmeyer flask.

(4) Add 25 mL of ferrous ammonium sulfate solution (78.4 g/L).

(5) Slowly add 20 mL of concentrated sulfuric acid while swirling flask.

(6) Boil until solution color is yellow-green.

(7) Cool under tap water.

(8) Add approximately 50 mL of distilled water.

(9) Add 3 or 4 drops of ferroin indicator. (0.025M O-phenanthroline ferrous sulfate.)

(10) Titrate with 0.2N potassium dichromate to a green end-point.

(11) Run a blank with 25 mL of distilled sample replacing the sample prepared in the same manner.

b. Calculation:

Normality of nitrate in sample = (A – B) x 0.267

When A = mL of 0.2N potassium dichromate required to titrate blank sample

When B = mL of 0.2N potassium dichromate required to titrate sample

TEST METHOD 40 — CHEM-MIL ETCH FOR TITANIUM ALLOYS

29.105 FREE ACID DETERMINATION.

a. Procedure.

(1) Pipet 5 mL of etchant with a polyethylene of polypropylene pipet into a 250-mL polyethylene, high heat resistant beaker.

(2) Add 10 mL of 2M potassium oxalate, 30 mL of 7M potassium fluoride and stir. Heat to 82° – 88°C (180° – 190°F) on a water bath.

(3) Add 100 mL of methyl alcohol and stir. Leave in hot water bath for an additional 10 minutes.

(4) Add 5 – 10 drops of phenolphthalein indicator and titrate with 1N NaOH until 0.2 mL increments maintain the pink color for a minimum of 30 seconds.

b. Calculation:

for H+ (free acid) are:

$$N \text{ (free acid)} = \frac{\text{mL (NaOH)} \times N(\text{NaOH})}{5}$$

29.106 NITRATE DETERMINATION.

a. Procedure.

(1) Add 10 ml of 50% sulfuric acid to 10 mL of a 1 – 10 aliquot of the etchant in a 100-mL volumetric flask. Dilute to volume with distilled water.

(2) To a 25 mL aliquot of the above diluted sample in 250-mL Erlenmeyer flask, add 25 mL of ferrous ammonium sulfate solution.

(3) While swirling the flask, add slowly from a pipet, 20 mL of concentrated sulfuric acid.

(4) Boil the solution until the color is yellow-green (about 5 minutes) and cool under tap water.

(5) Add about 50 mL of distilled water and 3 drops of ferroin indicator.

(6) Titrate with 0.200N potassium dichromate to a green end-point.

(7) Run a blank with 25 mL of distilled water replacing the sample.

b. Calculation:

(A – B) x 0.267 = normality of nitrate in sample

A = mL 0.2 N potassium dichromate required to titrate blank

B = 0.2 N potassium dichromate required to titrate sample

29.107 TITANIUM DETERMINATION.

a. Procedure.

(1) Add 10 mL of 50% H_2SO_4 to 50 mL of distilled water in a 200-mL volumetric flask.

(2) Add a 5 mL aliquot of 1/10 diluted etchant.

(3) Add 12 mL of 85% phosphoric acid (H_3PO_4).

(4) Add 10 mL of 30% hydrogen peroxide (H_2O_2).

(5) Dilute to volume and mix.

(6) Read the absorbance of the solution of 400 millimicrons in a Beckman Model B spectrophotometer (with water set at an absorbance of 0.000).

(7) Compare to a standard solution containing 8.00 mg titanium and the indicated amounts of reagents. Alternatively make the measurement in a colormeter with a 400 mx. Filter and water blank set at zero. Record Rx, the unknown reading, and Rs, the standard reading.

b. Calculation:

$$\text{Titanium in grams per liter} = \frac{Rx}{Rs} \times 16$$

$$\text{Titanium as } H_2TiF_6 \text{ (as acid normality)} = \frac{Rx}{Rs} \times 2/3$$

Where

Rx = reading of the unknown

Rstd = reading of the standard solution

29.108 SURFACE TENSION DETERMINATION.

a. Use clean polyethylene beaker.

b. Use a DuNouy Tensiometer.

c. Rejuvenation.

(1) Maintain the etchant bath in the recommended control ranges. Analyzer per the attached methods found under Bath Control.

(2) The following formula may be used to make additions of hydrofluoric and nitric acid to the etchant:

Gals of acid to be added – (desired normality-present normality) x bath vol in normality of correction acid – desired normality

Example:

	Present Normality	Desired Normality
HF:	2.3N	2.8N
HNO_3:	1.5N	1.7N

1. HF correction: 70% HF used, which is 44N

   1000 gal bath

   Gals to be added = $\frac{(2.8N - 2.3NO) \times 1000 \text{ gals}}{44N - 2.8N} = \frac{0.5 \times 1000}{41.2} = 12.1$ gals

2. HNO_3 correction: 42° HNO_3 used which is 16N

   Gals HNO to be added = $\frac{(1.7N - 1.5N) \times 1000 \text{ gals}}{15 - 1.7} = \frac{0.2 \times 1000}{13.3} = 15$ gals

TEST METHOD 41 — SODIUM, POTASSIUM AMMONIUM BIFLUORIDE

29.109 SODIUM, POTASSIUM, OR AMMONIUM BIFLUORIDE DETERMINATION.

a. Procedure.

(1) Pipet a 100 mL sample of solution into a 250-mL Erlenmeyer flask.

(2) Add 2 – 3 drops of phenolphthalein indicator solution.

(3) Titrate with 1.0N sodium hydroxide (NaOH) to a permanent pink end-point.

b. Control: maintain solution so that a 100 mL sample of solution requires between 45 and 55 mL of 1.0N sodium hydroxide (NaOH) to reach end point.

TEST METHOD 42 — CHROMIC ACID ANODIZE

29.110 CHROMIC ACID ANODIZE DETERMINATION.

a. Procedure.

(1) Pipet a 25 mL sample into a 250-mL volumetric flask and dilute to the mark with distilled water.

(2) Pipet a 10 mL aliquot into a 250-mL Erlenmeyer flask.

(3) Add approximately 100 mL of distilled water.

(4) Add 1 gram of ammonium bifluoride.

(5) Add 10 mL of 10% potassium iodide (KI) solution.

(6) Add 15 mL of concentrated hydrochloric acid and allow to stand for at least 2 minutes.

(7) Titrate with 0.1N sodium thiosulfate ($Na_2S_2O_3$) until the solution is straw color.

(8) Add 3 – 5 mL of starch indicator solution.

(9) Continue the titration to a pale green end-point.

b. Calculation:

Chromic acid (g/L) = mL ($Na_2S_2O_3$) x N ($Na_2S_2O_3$) x 33.64

TEST METHOD 43 — SULFURIC ANODIZE

29.111 SULFURIC ANODIZE DETERMINATION.

a. Procedure.

(1) Pipet a 10 mL sample of solution into 2 250-mL Erlenmeyer flask.

(2) Add 100 mL of distilled water.

(3) Add 2 – 3 drops of phenolphthalein indicator solution.

(4) Titrate 1 sample with standard sodium hydroxide (NaOH) to a permanent pink end-point. Record titration volume as A.

(5) Titrate the second sample slowly with standard sodium hydroxide until the alumina that forms with each drop is only slowly redissolved. Now add 20 mL of potassium fluoride solution (50g/100mL). Then continue the titration to a pink end-point. Record titration volume as B.

b. Calculation:

Free sulfuric acid (g/L) = B x N(NaOH) x 4.9

Aluminum (g/L) = (A – B) x N(NaOH) x 0.9

TEST METHOD 44 — HARD ANODIZE

29.112 OXALIC ACID DETERMINATION.

a. Procedure.

(1) Pipet a 10 mL sample of solution into a 250-mL flask.

(2) Add 50 mL of distilled water.

(3) Add 40 mL of 20% sulfuric acid.

(4) Heat to 60° – 70°C (140° – 158°F).

(5) Titrate with 0.1N potassium permanganate ($KMnO_4$) to the first permanent pink coloration.

(6) Let titration volume x N($KMnO_4$) = A.

b. Calculation:

Oxalic acid (oz/gal) = mL ($KMnO_4$) x N ($KMnO_4$) x 0.98

Oxalic acid (g/L) = mL ($KMnO_4$) x N ($KMnO_4$) x 6.1

29.113 FREE ACID AS SULFURIC ACID DETERMINATION.

a. Procedure.

(1) Pipet a 10 mL sample of solution into a 250-mL flask.

(2) Add 20 mL of neutral potassium fluoride solution (50% solution neutralized to phenolphthalein).

(3) Add several drops of bromo-thymol blue indicator.

(4) Titrate with 0.2N sodium hydroxide (NaOH) to a permanent blue color.

(5) Let titration volume x N(NaOH) = B.

b. Calculation:

Free sulfuric acid (g/L) = $(B - \frac{A}{2}) \times 9.8$

% Volume free sulfuric acid = $(B - \frac{A}{2}) \times 0.53$

29.114 ESTIMATION OF ALUMINUM.

a. Procedure.

(1) Pipet a 10 mL sample of solution into a 250-mL flask.

(2) Add several drops of phenolphthalein indicator.

(3) Titrate with 0.2N sodium hydroxide (NaOH) a red coloration.

(4) Let titration volume x N(NaOH) C.

b. Calculation:

Aluminum (g/L) = (C – B) x 1.8

TEST METHOD 45 — SODIUM DICHROMATE

29.115 SODIUM DICHROMATE DETERMINATION.

a. Procedure.

(1) Pipet a 25 mL sample of solution into a 250-mL volumetric flask and dilute to the mark with distilled water.

(2) Pipet a 10 mL aliquot into a 250-mL Erlenmeyer flask.

(3) Add approximately 100 mL of distilled water.

(4) Add 1 gram of ammonium bifluoride.

(5) Add 15 mL of concentrated hydrochloric acid.

(6) Add 10 mL of (l0%) potassium iodide solution.

(7) Allow solution to stand for several minutes.

(8) Titrate with 0.1N sodium thiosulfate ($Na_2S_2O_3$) until the solution is straw color.

(9) Add 3 – 5 mL of starch indicator solution.

(10) Continue titration to a light green end-point.

b. Calculation:

Sodium dichromate (g/L) = mL ($Na_2S_2O_3$) x N($Na_2S_2O_3$) x 43.7

29.116 NITRIC ACID DETERMINATION.

a. Procedure.

(1) Pipet a 1 mL sample of solution into a 250-mL beaker.

(2) Add approximately 50 mL of distilled water.

(3) Standardize a glass electrode equipped pH meter, using a 4.0 buffer solution.

(4) Immerse electrode into sample.

(5) Titrate with 0.1N sodium hydroxide (NaOH) solution to a pH of 4.0 – 4.5.

b. Calculation:

Nitric acid (mL/l) = mL (NaOH) x N(NaOH) x 5.2

29.117 POTASSIUM BIFLUORIDE.

a. Procedure.

(1) Pipet a 10 mL sample of solution into a 250-mL Erlenmeyer flask.

(2) Add approximately 80 mL of distilled water.

(3) Add 2 – 3 drops of phenolphthalein indicator solution.

(4) Titrate with 0.5N sodium hydroxide (NaOH) to a pink end-point.

b. Calculation:

Potassium bifluoride (g/L) = mL (NaOH) x N(NaOH) x 5

Ammonium bifluoride (g/L) = mL (NaOH) x N(NaOH) x 11

TEST METHOD 46 — CHROMIC ACID PICKLE

29.118 CHROMIC ACID PICKLE DETERMINATION.

a. Procedure.

(1) Pipet a 10 mL sample of solution into a 250-mL volumetric flask and dilute to the mark with distilled water.

(2) Pipet a 10 mL aliquot into a 250-mL Erlenmeyer flask.

(3) Add approximately 100 mL of distilled water.

(4) Add 1 gram of ammonium bifluoride.

(5) Add 15 mL of concentrated hydrochloric acid.

(6) Add 10 mL of (10%) potassium iodide solution.

(7) Titrate with 0.1N sodium thiosulfate ($Na_2S_2O_3$) until the solution is straw color.

(8) Add 3 – 5 mL of starch indicator solution.

(9) Continue titration to a light green end-point.

b. Calculation:

Chromic acid (g/L) = mL ($Na_2S_2O_3$) x N($Na_2S_2O_3$) x 83.35

TEST METHOD 47 — CONVERSION TREATMENT TYPE VIII

29.119 IRIDITE #15 DETERMINATION.

a. Procedure.

(1) Pipet a 25 mL sample of solution into a 250-mL volumetric flask and dilute to the mark with distilled water.

(2) Pipet a 50 mL aliquot into a 400-mL beaker.

(3) Add 250 mL of distilled water.

(4) Add 25 mL of 10% potassium iodite solution.

(5) Add 10 mL of (1:1) sulfuric acid.

(6) Titrate with standard sodium thiosulfate ($Na_2S_2O_3$) to a straw color.

(7) Add 3 – 5 mL of starch indicator solution.

(8) Continue titration to a light green end-point.

b. Calculation:

Iridite #15 (g/L) = mL ($Na_2S_2O_3$) x N($Na_2S_2O_3$) x 16.65

29.120 HYDROCHLORIC ACID DETERMINATION.

a. Procedure.

(1) Pipet a 50 mL aliquot of solution from Paragraph 29.119, Step a(1) into a 250-mL beaker.

(2) Add 50 mL of distilled water.

(3) Add 3 – 5 drops of phenolphthalein indicator solution.

(4) Add ammonium hydroxide until solution turns pink.

(5) Add 1.0N sulfuric acid until solution turns yellow.

(6) Titrate with standard (0.1N) silver nitrate to the first sign of buff turbidity.

b. Calculation:

Hydrochloric acid (mL/l) = mL ($AgNO_3$) x 2

TEST METHOD 48 — PHOSPHATE SOLUTIONS

29.121 FREE AND TOTAL ACID DETERMINATION.

a. Procedure.

(1) Pipet a 10 mL sample of solution into a 250-mL Erlenmeyer flask.

(2) Add approximately 50 mL of distilled water.

(3) Add 2 drops of methyl orange-xylene cyanole indicator.

(4) Titrate with 0.1N sodium hydroxide (NaOH) to a gray to greenish-gray color.

(5) Record the number of mL of NaOH used. Let this volume be A.

(6) Add several drops of phynolphthalein indicator.

(7) Continue the titration to a pink end-point.

(8) Record the total number of mL of NaOH used. Let this volume be B.

b. Calculation:

Free acid (points) = A

Total acid (points) = total titration volume B

29.122 IRON DETERMINATION.

a. Procedure.

(1) Weigh to the nearest milligram approximately 10 grams of the processing solution into a flask.

(2) Add 10 mL of 6N sulfuric acid.

(3) Titrate with standard potassium permanganate ($KMnO_4$) to a slightly pink color which persists for 15 seconds.

b. Calculation:

$$\text{Iron (percent)} = \frac{\text{mL } (KMnO_4) \times N(KMnO_4) \times 0.05584 \times 100}{\text{weight of sample}}$$

29.123 MANGANESE DETERMINATION.

a. Procedure.

(1) Weigh to the nearest milligram approximately 10 grams of the processing solution into a 250-mL Erlenmeyer flask.

(2) Add 3 mL of 0.1N silver nitrate solution.

(3) Add 20 mL of 6N sulfuric acid.

(4) Bring the mixture to a boil.

(5) Cool to room temperature.

(6) Add 100 mL of distilled water.

(7) Add 3 grams of ammonium persulfate.

(8) Boil this mixture until the ammonium persulfate has decomposed (decomposition is complete when frothing stops).

(9) Pipet into the mixture 10 mL of 0.18N ferrous ammonium sulfate.

(10) Titrate with standard potassium permanganate to the first permanent pink end-point which persists for 20 seconds.

(11) Run a blank determination following the above procedure, except that the addition of the sample shall be omitted.

b. Calculation:

$$\frac{N\left(\frac{EqW_{Cr^{+6}}}{L}\right)}{V_s} = \frac{0.100\left(\frac{17.33\ g}{L}\right)}{500\ mL} = 0.00347\frac{g}{mL \cdot L} = 3.47\frac{ppm}{mL}$$

29.124 ZINC DETERMINATION.

a. Procedure.

(1) Pipet a 2 mL sample of the processing solution into a 150-mL Erlenmeyer flask.

(2) Add 25 mL of 6N sulfuric acid.

(3) Add 0.5 grams of UREA (omit if nitrates are absent).

(4) Titrate with potassium permanganate to oxidize any ferrous iron present.

(5) Titrate to a pink end-point.

(6) Add sufficient distilled water to make 50 mL volume.

(7) Warm the solution slightly.

(8) Add both the following, which should be prepared prior to the test by weighing, then mixing 5 grams of sodium pyrophosphate and 2 grams of ammonium sulfate.

(9) Heat the solution to 38°C (100°F).

(10) Add 4 drops of 1% potassium ferricyanide indicator.

(11) Add 5 drops of diphenylbenzidine indicator (solution should turn deep blue. If it does not turn deep blue add 1 drop of potassium permanganate solution.).

(12) Titrate with M/80 potassium ferrocyanide ($K_4Fe(CN)_6$) to a light apple-green end-point.

(13) Add 0.5 – 5 mL excess titrant.

(14) Record total mL used.

(15) Back titrate with standard zinc solution to sudden darkening purplish color or dirty blue end-point.

(16) Record the mL of solution used.

b. Calculation:

$$\text{Zinc (percent)} = \frac{(A - B) \times \text{zinc factor} \times 100}{\text{weight (sample)}}$$

A = total mL (K_4 $Fe(CN)_6$ – (mL ($KMnO_4$) x 0.12) + 0.2

NOTE

The zinc factor is determined in the standardization of the potassium ferrocyanide solution (usually made up where 1 mL of $K_4Fe(CN)_6$ equals 0.0012 grams of zinc, and the zinc factor is 0.0012.

B = mL standard zinc solution used in titration

29.125 NITRATE DETERMINATION.

a. Procedure.

(1) Weigh to the nearest milligram approximately 5 grams of processing solution into a 250-mL beaker.

(2) Add approximately 100 mL of distilled water.

(3) Add 1 mL of 6N sulfuric acid.

(4) Heat the solution to a boil.

(5) Add 10 mL of 10% nitron reagent.

(6) Cool and place in an ice-water bath for 1½ hours.

(7) Filter through a weighed, fritted-glass crucible of medium porosity, placing a piece of ice in the crucible before filtering (use the filtrate to rinse the beaker to transfer all the precipitate).

(8) Wash the collected precipitate in the crucible with 3 mL portions of ice water.

(9) Reboil the filtrate and add a little more nitron reagent to check for completeness of precipitation.

(10) Dry the crucible at 105°C (220°F).

(11) Cool in a desiccator, then weigh.

b. Calculation:

$$\text{Nitrate (percent)} = \frac{16.52 \times \text{wt (ppt)}}{\text{weight (sample)}}$$

29.126 PHYSICAL TEST.

29.126.1 Specimen Criteria. When the coated articles are of such form, size, shape, and value as to prohibit their use or are not readily adaptable to a quality conformance test, tests shall be made by the use of separate specimens coated concurrently with the articles represented. The separate specimens shall be of a basis metal equivalent to that of the article represented. The specimens shall have an external surface of 10.16 – 107 square centimeters (4 – 50 square inches).

29.126.2 Tests.

a. Accelerated Corrosion Resistance – a phosphate coated item or test specimen, free of supplementary treatment, shall be subjected to a 5% salt spray test at 35°C + 1.1 – 1.7 (95°F + 2 – 3). Exposure time for Type M coating shall be 1½ hours and 2 hours for Type Z coating. The item shall be considered conforming to this requirement, if there is no evidence of corrosion on any coated surface of the item.

b. Weight Coating.

(1) Procedure.

(a) Weigh a coated test specimen, prior to supplementary treatment, to the nearest milligram.

(b) Remove the coating by immersion in a 50 g/L chromic acid solution operated at 74°C (165°F).

(c) Rinse and dry the specimen.

(d) Reweigh test specimen.

(2) Calculation:

$$\text{Wt (mg/ft}^2\text{)} = \frac{\text{(initial in grams – final weight in grams)}}{\text{total area in square inches}} \times 144{,}000$$

(3) Requirements:

Type M shall be a minimum of 1500 milligrams/square feet

Type Z shall be a minimum of 1000 milligrams/square feet

TEST METHOD 49 — BLACK OXIDE

29.127 SOLUTION CONCENTRATION.

The solution concentration will be maintained by addition of chemicals in the proportions as used for solution preparation. The addition of chemicals shall be such that the correct bath operating temperature will be maintained and the requirements of the physical test met.

29.128 PHYSICAL TEST.

a. Smut Test – a coated item shall be wiped with a clean white cloth and the cloth examined for indications of smut. Any appearance of smut shall be considered as noncompliance with this requirement.

b. Oxalic Acid Spot Test.

(1) A coated item, prior to the application of a preservative, shall have deposited on one flat spot of black oxide coating, 3 drops of 5% oxalic acid solution. The reaction shall be observed after 30 seconds and up to 8 minutes. After 8 minutes the item shall be rinsed and compared to Figure 29-1, Views 1, 2 and 3.

(2) A light grey center with a lighter border color (Figure 29-1, View 1) indicates a poor quality coating. A grey-black center with a light border (Figure 29-1, View 2) indicates a borderline quality coating. A black or dark brown center with a light border (Figure 29-1,View 3) indicates a good quality coating. The coating must conform to the good quality coating of Figure 29-1, View 3 to be acceptable.

TEST METHOD 50 — ALUMINUM DESMUT

29.129 SC-590 DETERMINATION.

a. Procedure.

(1) Pipet a 5 mL sample of solution into a 250-mL Erlenmeyer flask.

(2) Add approximately 100 mL of distilled water.

(3) Add 10 mL of 50% (1:1) sulfuric acid.

(4) Titrate with 0.1N potassium permanganate ($KMnO_4$) until a pink color persists for at least 30 seconds.

b. Calculation:

SC-590 (% by vol) = mL ($KMnO^4$) x 0.09

29.130 SULFURIC ACID DETERMINATION.

a. Procedure.

(1) Pipet a 10 mL sample of solution into a 250-mL Erlenmeyer flask.

(2) Add approximately 100 mL of distilled water.

(3) Add 4 drops of bromphenol blue indicator solution.

(4) Titrate with 1.0N sodium hydroxide (NaOH) to a blue end-point.

b. Calculation:

Sulfuric acid (% by vol) = mL (NaOH) x 0.287

TEST METHOD 51 — ALKALINE CLEANER (SODIUM HYDROXIDE, TRISODIUM PHOSPHATE, AND SODIUM CARBONATE)

29.131 SODIUM HYDROXIDE, TRISODIUM PHOSPHATE, AND SODIUM CARBONATE DETERMINATION.

a. Procedure.

(1) Pipet a 10 mL sample of solution into a 250-mL Erlenmeyer flask.

(2) Add 80 mL of distilled water.

(3) Add several drops of methyl orange indicator solution.

(4) Titrate with 0.5N sulfuric acid to an amber end-point. Let this volume = A.

(5) Boil this solution for about 10 minutes.

(6) Cool the solution.

(7) Add several drops of phenolphthalein indicator solution.

(8) Titrate with 0.5N sodium hydroxide to a pink end-point. Let this volume = B.

(9) Into another 250-mL Erlenmeyer flask, pipet 10 mL of solution.

(10) Add 80 mL of distilled water.

(11) Add several drops of phenolphthalein indicator solution.

(12) Titrate with 0.5N sulfuric acid to an amber end-point. Let this volume = C.

b. Calculation:

Sodium carbonate (g/L) = A – B – C – x 5.3
Sodium hydroxide (g/L) = (2C – A) x 2
Trisodium phosphate (g/L) = B x 8.2

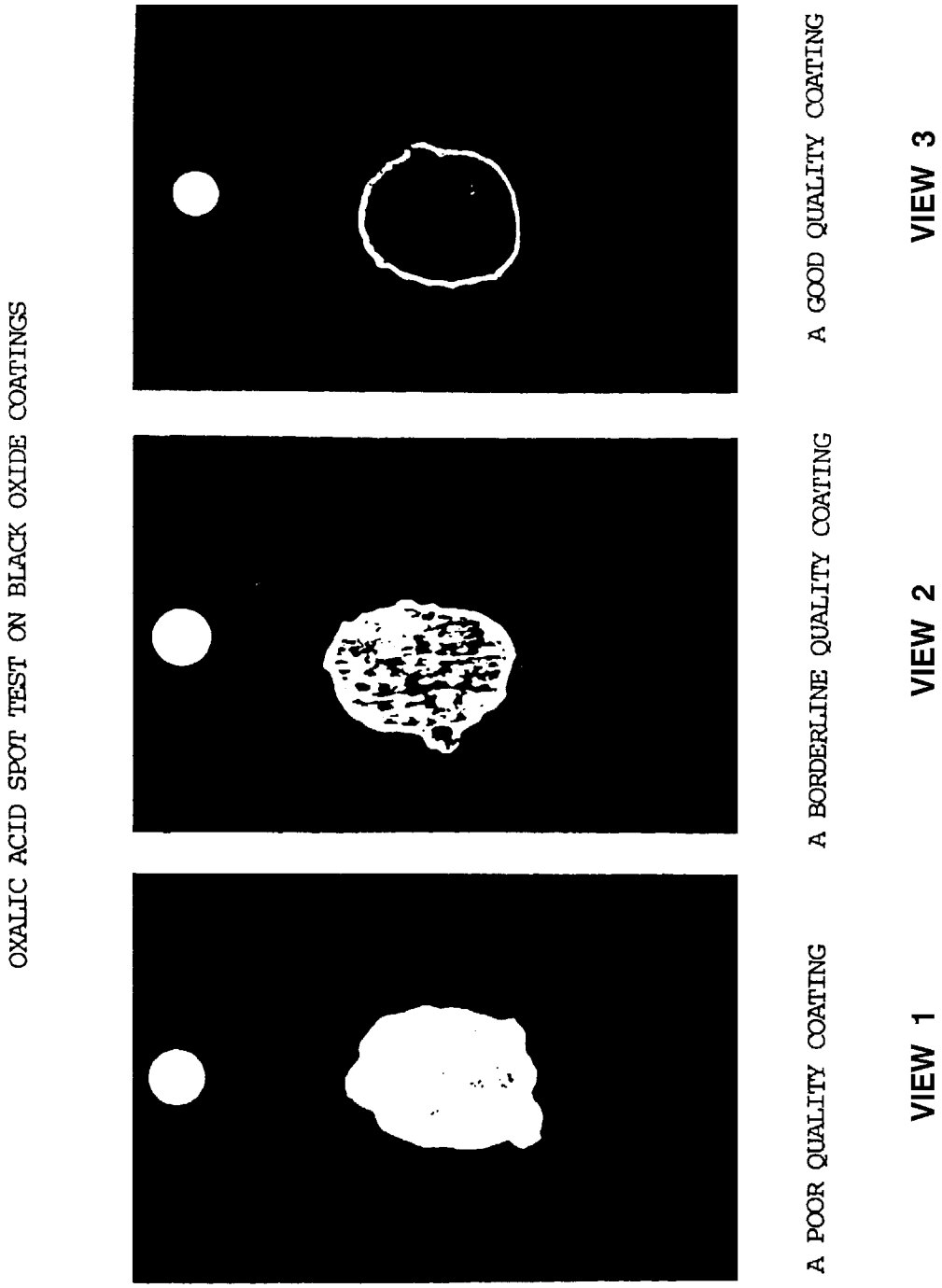

Figure 29-1. Oxalic Acid Spot Test on Black Oxide Coatings

TEST METHOD 52 — TIN PLATING (POTASSIUM BASE)

29.132 TIN DETERMINATION.

a. Procedure.

(1) Pipet a 5 mL sample of plating solution into a 100-mL volumetric flask, and dilute to the mark with distilled water.

(2) Pipet a 25 mL aliquot into a 500-mL Erlenmeyer flask.

(3) Add 75 mL concentrated hydrochloric acid (HCl) and 5 mL of concentrated sulfuric acid (H_2SO_4).

(4) Dilute to approximately 300 mL with distilled water.

(5) Place a 2 gram aluminum coil in the flask.

(6) Stopper the flask with 1-hole rubber stopper to which a ¼ x 6 inch glass tube has been fitted. The tube outlet should be bent so that it can be immersed in a beaker of saturated sodium bicarbonate ($NaHCO_3$) solution.

(7) Place the stoppered flask on a hot plate. Bring the contents to a boil and immerse the outlet tube in the sodium bicarbonate solution taking care that no air is allowed to enter.

(8) Remove the flask from the hot plate with the tube still in the $NaHCO_3$ solution. A small amount of $NaHCO_3$ solution will be drawn into the flask to generate CO_2.

(9) Transfer the flask to a cooling tank and allow it to cool to room temperature or lower.

(10) Remove the cooled flask from the cooling tank and remove the stopper.

(11) Quickly add several pieces of granulated marble or dry ice and 5 mL of starch solution.

(12) Titrate immediately with 0.1N potassium iodine solution to the appearance of the blue starch-iodine end-point.

b. Calculation:

Stannate (g/L) = mL (KI used) x N(KI) x 4.76

29.133 FREE POTASSIUM HYDROXIDE DETERMINATION.

a. Procedure.

(1) Pipet 20 mL of plating solution into a 100-mL volumetric flask.

(2) Add 20 mL of saturated barium chloride solution. Shake thoroughly and dilute to the mark with distilled water. Mix contents thoroughly and allow the precipitate to settle.

(3) Pipet a 10 mL aliquot of the clear liquid into a 250-mL Erlenmeyer flask.

(4) Add approximately 25 mL of distilled water.

(5) Add several drops of phenolphthalein indicator solution.

(6) Titrate with 0.1N hydrochloric acid (HCl).

b. Calculation:

Free potassium hydroxide (g/L) = N(HCL) x mL (HCL used) x 28

TEST METHOD 54 — NICKEL SULFAMATE STRIKE

29.134 BORIC ACID DETERMINATION.

a. Procedure.

(1) Pipet a 5 mL sample of solution into a 250-mL beaker.

(2) Add 4 or 5 drops of bromo-cresol purple indicator.

(3) Titrate with 0.5N sodium hydroxide until solution just turns blue. Record this volume as A.

(4) Add mannitol, stirring well, until a thin yellow-green paste is produced.

(5) Titrate with 0.5N sodium hydroxide until paste turns light blue. Record this volume as B.

b. Calculation:

Boric acid (g/L) = (B – A) x 6.15

29.135 HYDROCHLORIC ACID DETERMINATION.

a. Procedure.

(1) Pipet a 5 mL sample into a 250-mL beaker.

(2) Add about 70 mL of distilled water.

(3) Add 3 mL of concentrated nitric acid.

(4) Add 10 mL of 0.1N silver nitrate solution.

(5) Boil for about 5 minutes.

(6) Cool to room temperature.

(7) Filter through No. 41 Whatman filter paper into a 250-mL Erlenmeyer flask. Wash filter 3 times with distilled water.

NOTE

The filtrate should be clear. If not, repeat Steps (5) through (7).

(8) Add 5 mL of ferric indicator to filtrate.

(9) Titrate (excess silver) with 0.1N potassium (or ammonium) thiocyanate solution until a permanent red-brown color is produced.

b. Calculation:

Hydrochloric acid (mL/l) = (10 mL 0.1N thiocyanate)
Hydrochloric acid x 2 (fl oz/gal) = (10 mL 0.1N thiocyanate) x 0.256

TEST METHOD 55 — ANODIZE STRIP

29.136 PHOSPHORIC ACID DETERMINATION.

a. Procedure.

(1) Pipet a 1 mL sample into a 100-mL volumetric flask and dilute to the mark with distilled water.

(2) Pipet a 10 mL aliquot into a 250-mL beaker.

(3) Add ammonium hydroxide (NH_4 OH) until the sample is neutral to litmus paper.

(4) Add 3 mL of concentrated nitric acid (HNO_3).

(5) Heat to approximately 45°C (112°F) and add 100 mL of ammonium molybdate ($(NH_4)_6$ MO_7O_{24}) reagent.*

*Ammonium molybdate reagent is made by dissolving 100 grams of 85% molybdic acid in 240 mL of distilled water then adding 140 mL of ammonium hydroxide. The solution is then filtered and to this is added 60 mL of nitric acid.

(6) Stir until a cloudy precipitate appears.

(7) Allow to cool and settle for approximately 1 hour.

(8) Test the filtrate with additional ammonium molybdate ($(NH^4)_6MO_7$ O_{24}) reagent until no further cloudiness appears.

(9) Filter through a preweighted filtering crucible then wash with 1% nitric acid then 1% potassium nitrate and finally distilled water.

(10) Dry in oven for 2 hours at 110° ± 2°C (230° ± 5°F).

(11) Desiccate and allow to cool to room temperature.

(12) Reweigh crucible.

b. Calculation:

Phosphoric acid (fl oz/gal) = weight (grams) X 47.65

29.137 PHOSPHORIC ACID DETERMINATION (OPTIONAL AAS METHOD).

a. Procedure.

(1) Set AAS to standard conditions for phosphorus according to instrument manual.

(2) Dilute a sample of solution 1:1 with distilled water. Greater dilutions may be necessary on specific samples.

(3) Optimize flame and burns head position with any phosphorus standard solution and dilution water as a blank. Standardize instrument with 5,000 and 10,000-ppm standards.

(4) Aspirate diluted sample directly and record results in ppm from interpolation of absorbance readings.

b. Calculation:

Phosphoric acid (fl oz/gal) ppm x 0.000684

TEST METHOD 56 — SULFURIC ACID AND AMMONIUM BIFLUORIDE

29.138 SULFURIC ACID AND AMMONIUM BIFLUORIDE DETERMINATION.

a. Procedure.

(1) H_2SO_4

(a) Pipette 2 mL sample into a 250-mL plastic beaker.

(b) Add 50 mL of distilled water and 2 – 3 drops of phenolphthalein.

(c) Titrate with 0.5N NaOH to a pink end-point.

(2) NH_4HF_2

(a) Place 5 mL of a 3% by volume NH_4 HF_2 standard, 5 mL of a 7% by volume NH_4 HF_2 standard, and 5 mL of sample each in a separate 250-mL plastic beaker containing 95 mL of 15% sodium acetate.

(b) Set up the Orion 901 in the CONCN mode, with the slope at –56.00.

(c) Place small stirring bars in the beakers.

(d) Place fluoride electrode and reference electrode in the 3% NH_4HF_2 standard, and dial in the standard value of 3.00.

(e) Set readout at 3.00 by pressing the clear/read MV button, then the set CONCN button.

(f) When the reading is stabilized at 3.00, place the electrode, in the 7% NH_4HF_2 standard, and adjust the slope until a stable reading of 7.00 is obtained.

(g) Place the electrodes in the samples and read % volume F – directly from meter.

b. Calculation:

$$\% \text{ Vol } H_2SO_4 = \text{Vol NaOH} \times N(\text{NaOH}) - \frac{\%F - \times 20/19}{2.71 \text{ vols}} \times \frac{0.0490 \times 100 \times 100}{\text{vols} \times 1.8354 \times 93.19}$$

0.0490 = milliequivalent weight H_2 SO_4

1.8354 = density of 93.19% H_2 SO_4

TEST METHOD 57 — MAGNESIUM ALLOY ETCHANT

29.139 POTASSIUM HYDROXIDE DETERMINATION.

a. Procedure.

(1) Obtain a 100 mL sample of etchant solution and allow it to cool to room temperature.

(2) Pipet a 10 mL sample into a 250-mL Erlenmeyer flask.

(3) Add 50 mL of distilled water.

(4) Add several drops of phenolphthalein indicator.

(5) Titrate with 0.5N hydrochloric acid (HCL) reagent to a colorless end-point.

b. Calculation:

Potassium Hydroxide (oz/gal) = volume (mL) of 0.5N HCL x 0.32

TEST METHOD 58 — NON-CHROMATED DESMUTTER

29.140 ISOPREP 184 DETERMINATION.

a. Procedure.

(1) Pipet 10 mL sample into 100-mL volumetric flask and dilute with deionized water to mark.

(2) Pipet 10 mL aliquot of above sample into 250-mL Erlenmeyer flask and add 75 – 100 mL of deionized water.

(3) Add 4 – 5 drops of methyl organge indicator.

(4) Titrate with 0.2N sodium hydroxide, drop by drop, to a distinct yellow-orange end-point.

b. Calculation:

Isoprep 184 (% by vol) = (mL 0.2N NaOH used) x 2.64

TEST METHOD 59 — BORIC ACID/SULFURIC ACID ANODIZING SOLUTION

29.141 BORIC ACID/SULFURIC ACID DETERMINATION.

a. Procedure.

(1) Pipet 10 mL of boric/sulfuric acid sample into a breaker.

(2) Add 20 mL of 1 M KF solution.

(3) Dilute to approximately 100 mL with deionized water.

(4) Use a magnetic stirrer to agitate this solution and a pH meter to monitor pH. A chemical pH indicator may be used in place of the pH meter.

(5) Titrate to pH of 7.0 with 0.100N NaOH; record volume in mL as V_1.

(6) Add 4 – 5 g of mannitol, allow it to dissolve and titrate to pH 8.2; record this volume in mL as V_2.

b. Calculation:

For sulfuric acid

$$H_2SO_4\ (g/L) = 0.4904\ \frac{g}{mL \cdot L} \times V_1$$

Where

$$\frac{N\left(\frac{EqW_{H_2SO_4}}{L}\right)}{V_s} = \frac{0.100\left(\frac{49.04\ g}{L}\right)}{10\ mL} = 0.4904\ \frac{g}{mL \cdot L}$$

and V_s = volume of sample in mL

For boric acid

$$H_3BO_3\ (g/L) = 0.6184\ \frac{g}{mL \cdot L} \times V_2$$

Where

$$\frac{N\left(\frac{EqW_{H_3BO_3}}{L}\right)}{V_s} = \frac{0.100\left(\frac{61.84\ g}{L}\right)}{10\ mL} = 0.6184\ \frac{g}{mL \cdot L}$$

29.142 ALUMINUM DETERMINATION.

a. Procedure.

(1) Pipet 10.00 mL of sample solution into beaker.

(2) Dilute to approximately 100 mL with deionized water.

(3) Use a magnetic stirrer to agitate this solution and a pH meter to monitor pH. A chemical pH indicator may be used in place of the pH meter.

(4) Titrate to a pH of 6.2 with 0.100N NaOH; record this volume in mL as V_3.

b. Calculation:

$$Al^{+3}\ (g/L) = 0.08994\ \frac{g}{mL \cdot L} \times (V_3 - V_1)$$

Where

$$\frac{N\left(\frac{EqW_{Al^{+3}}}{L}\right)}{V_s} = \frac{0.100\left(\frac{8.994\ g}{L}\right)}{10\ mL} = 0.08994\ \frac{g}{mL \cdot L}$$

29.143 CHLORIDE DETERMINATION (PREFERRED).

Procedure – use Labconco Digital Chloridometer (available from Fisher Scientific) according to the manufacturer's instructions.

29.144 CHLORIDE DETERMINATION (ALTERNATE).

Procedure – use ion chromatography.

29.145 CHLORIDE DETERMINATION (SECOND ALTERNATE).

a. Procedure.

(1) Pipet a 50 mL sample into a 250-mL Erlenmeyer flask.

(2) Add 80 mL of distilled water.

(3) Add 0.4 g of sodium bicarbonate.

(4) Add 5 drops of 10% potassium chromate solution.

(5) Titrate with 0.100N silver nitrate solution to an orange-brown end-point.

b. Calculation:

$$Cl^-\ (g/L) = 0.07091\ \frac{g}{mL \cdot L} \times V_t$$

Where V_t = volume of titrant

and

$$\frac{N\left(\frac{EqW_{Cl^-}}{L}\right)}{V_s} = \frac{0.100\left(\frac{35.45\ g}{L}\right)}{50\ mL} = 0.07091\ \frac{g}{mL \cdot L}$$

29.146 PHYSICAL TESTS.

29.146.1 Coating Weight. The coating weight shall be 200 mg/ft^2 minimum – 700 mg/ft^2 maximum. Perform weight testing according to ASTM B137. Monitor coating weight using 2024-T3 or -T4 panels.

29.146.2 Corrosion Resistance.

a. Three (3 by 10 inch by either 0.032 or 0.40 inch) test panels of 2024-T3 or -T4 shall be anodized, sealed, and tested. Test panels shall be processed in the same way as the 2024 parts they represent.

b. Subject the test panels to a 5% salt spray test according to ASTM B117, except that the panels shall be inclined 6° from vertical. Panels shall be exposed for 336 hours. After exposure, visually examine the panels to determine if the conditions as specified in MIL-A-8625 are met.

TEST METHOD 60 — DILUTE CHROMATE SEAL SOLUTION

29.147 HEXAVALENT CHROMIUM DETERMINATION.

a. Procedure.

(1) Measure a 500 mL sample using a 500-mL volumeteric flask.

(2) Transfer quantitatively to a 1,000-mL flask.

(3) Add 15 mL 20% KI, 10 mL 1:1 HCl, and mix well.

(4) Add 7 drops of starch solution and titrate with 0.100N $Na_2S_2O_3$ to starch end-point that is stable for at least 1 minute.

b. Calculation:

$$Cr^{+6}\ (ppm) = 3.47\ \frac{ppm}{mL} \times V_t$$

Where

$$\frac{N\left(\frac{EqW_{Cr^{+6}}}{L}\right)}{V_s} = \frac{0.100\left(\frac{17.33\ g}{L}\right)}{500\ mL} = 0.00347\frac{g}{mL \cdot L} = 3.47\frac{ppm}{mL}$$

29.148 SILICATE DETERMINATION.

a. Procedure.

(1) Pipet 50 mL of sample into a 100-mL mixing cylinder.

(2) Add 2 mL of ammonium molybdate solution.

(3) Add 1.5 mL of oxalic acid and mix well.

(4) Prepare silica standards using the above procedure which bracket the estimated concentration by diluting a 1000 mg/L silica standard. For example, if the estimated concentration is 8 ppm, prepare standards at 4, 6, 8, 10, and 12 ppm.

(5) Measure the optical densities of the sample and standards using a colorimeter. A UV-/Vis diode array spectrophotometer is preferred.

(6) Prepare a standard curve and read the silica concentration from it.

b. Calculation – if the curve is linear and passes through the origin then the slope (k) and the optical density (A) may be used to calculate the silica concentration (c).

$$c = \frac{A}{k}$$

29.149 TOTAL DISSOLVED SOLIDS DETERMINATION.

a. Procedure.

(1) Weigh a clean petri dish to the nearest mg on an analytical balance and record the weight as W_1.

(2) Place 100 mL of sample in the petri dish and place it under an infrared heat lamp.

(3) Evaporate the sample to dryness in a minimum of 3 hours and cool in a desiccator. The residue may be hygroscopic; therefore, be sure that the residue is completely dry.

(4) Weigh the petri dish with residue to the nearest mg on an analytical balance and record the weight as W_2.

b. Calculation:

$$TDS\ (ppm) = 10\ \frac{ppm}{mg} \times (W_2 - W_1)$$

29.150 PREPARATION AND STANDARDIZATION PROCEDURES FOR VOLUMETRIC SOLUTIONS.

a. Standard Ceric Sulfate Solution, Q.1N.

(1) Chemicals required to prepare solution are:

1. Ceric Sulfate, Reagent Grade

2. Standard 0.1N Ferrous Ammonium Sulfate

3. Sulfuric Acid, Reagent Grade

(2) Preparation of solution:

(a) Add 28 mL sulfuric acid slowly to 500-mL water in a large beaker.

(b) Add 53.0 g ceric sulfate, $H_4Ce(SO_4)_4$, and stir until dissolved.

(c) Dilute to 1000 mL with distilled water, mix thoroughly and transfer to a glass-stoppered bottle.

(3) Standardization – standardize against freshly standardized 0.1N ferrous ammonium sulfate as follows:

(a) Pipet 25 mL ferrous ammonium sulfate solution into a 500-mL flask which contains 100 mL cold sulfuric acid.

(b) Add 1 or 2 drops O-phenanthroline indicator and titrate with the ceric sulfate solution until

color changes from reddish to colorless or greenish.

(4) Calculate normality of ceric sulfate solution as follows:

$$\text{Normality of ceric sulfate solution} = \frac{\text{normality of ferrous ammonium sulfate} \times 25}{\text{ceric sulfate required for titration}}$$

b. Copper-EDTA Solution.

(1) Chemicals required to prepare solution are:

1. Copper Sulfate, Reagent Grade

2. Ethylene Diamine Tetraacetic Acid Disodium Salt, Reagent Grade

(2) Preparation of solutions:

(a) Dissolve 25.00 g of copper sulfate ($CuSO_4 \cdot 5H_2O$) in 1000 mL distilled water.

(b) Dissolve 37.2900 g ethylene diamine tetraacetic acid disodium salt in 1000 mL distilled water in a 1-liter volumetric flask to prepare a 0.1M EDTA solution. Store in a plastic bottle.

(3) Standardization of copper — EDTA solution.

(a) Pipet 5 mL of copper sulfate solution into a small beaker.

(b) Add approximately 0.5 g of murexide indicator.

(c) Titrate slowly, with 0.1M EDTA which has been transferred to a clean dry buret, until a blue-violet end-point is reached.

(d) Record the exact amount of EDTA required to neutralize 5 mL copper sulfate solution.

(e) Mix the copper sulfate and the EDTA in the exact ratio as determined by the titration.

(f) Store in a dark dropping bottle.

c. Standard EDTA Solution, 0.0575 Molar – weigh without drying, 21.44 g ethylenediamine tetraacetic acid disodium salt. Dissolve in distilled water and dilute to 1000 mL in a 1-liter volumetric flask. Store in a plastic container.

d. Standard EDTA Solution, 0.01 Molar – weigh, without drying, 37.290 g ethylenediamine tetraacetic acid disodium salt. Dissolve in distilled water and dilute to 1000 mL in a 1-liter volumetric flask.

e. Standard EDTA Solution, 0.1 Molar – weigh, without drying, 37.290 g of ethylenediamine tetraacetic acid disodium salt. Dissolve in distilled water and dilute to 1000 mL in a 1-liter volumetric flask. Store in plastic container.

f. Standard 0.1N Hydrochloric Acid Solution.

(1) Pipet 100 mL 1.0N hydrochloric acid solution into a 1-liter volumetric flask.

(2) Dilute to exactly 1 liter with distilled water, and mix well.

(3) Transfer to a suitable bottle for storage.

(4) Calculate normality of 0.1N hydrochloric acid solution as follows:

$$\text{Normality of 0.1N hydrochloric acid solution} = \frac{\text{normality of 1.0N hydrochloric acid}}{10}$$

g. Standard Hydrochloric Acid Solution, 0.5N.

(1) Pipet 500 mL 1.0N hydrochloric acid solution into a 1-liter volumetric flask.

(2) Dilute with distilled water to exactly 1000 mL and mix well.

(3) Transfer to a suitable bottle for storage.

(4) Calculate normality of 0.5N hydrochloric acid solution as follows:

$$\text{Normality of 0.5N hydrochloric acid solution} = \frac{\text{normality of 1.0N hydrochloric acid}}{2}$$

h. Standard Hydrochloric Acid, 1.0N.

(1) Chemicals required for preparing and standardizing 1.0N hydrochloric acid standard solution are:

1. Standard 0.1N Sodium Hydroxide Solution

2. Hydrochloric Acid, Concentrated, Reagent Grade

3. Potassium Chromate Indicator

4. Silver Nitrate, 0.10N Solution

(2) Prepare solution as follows:

(a) Add 83.0 mL hydrochloric acid, Reagent Grade, to 500 mL distilled water with stirring.

(b) Dilute to 1 liter with distilled water and mix well.

(3) Standardize solution as follows:

(a) Pipet 5 mL hydrochloric acid solution into a 250-mL Erlenmeyer flask and add 50 mL distilled water.

(b) Add 0.1N sodium hydroxide solution until solution is neutral to litmus.

(c) Add 1 mL potassium chromate indicator.

(d) Titrate with standard 0.10N silver nitrate, until a red precipitate just forms.

(4) Calculate normality of hydrochloric solution as follows:

$$\text{Normality of 1.0 hydrochloric acid} = \frac{\text{mL of 0.10N silver nitrate required}}{50}$$

i. Standard Iodine Solution, 0.01N.

(1) Chemicals required to prepare 0.1N iodine solution are:

1. Standard Iodine Solution 0.25N

(2) Preparation of 0.01N iodine solution is as follows:

(a) Pipet 40 mL standard iodine, 0.25N, into a 1-liter volumetric flask.

(b) Fill flask to mark with distilled water and mix thoroughly.

(3) Calculate normality of iodine as follows:

$$\text{Normality of 0.01N iodine solution} = \frac{\text{normality of 0.25N iodine solution}}{25}$$

j. Standard Iodine Solution, 0.1N.

(1) Chemicals required to prepare 0.1N iodine standard solution are:

1. Standard Iodine Solution, 0.25N

(2) Prepare 0.1N standard iodine solution as follows:

(a) Pipet 400 mL of 0.25N iodine solution into 1-liter volumetric flask.

(b) Fill flask to mark with distilled water and mix thoroughly.

(3) Calculate normality of standard 0.1N iodine solution as follows:

$$\text{Normality of standard 0.1N iodine solution} = \frac{\text{normality of 0.25N standard iodine solution}}{2.5}$$

k. Standard Iodine Solution, 0.25N.

(1) Chemicals required for preparing solution are:

1. Iodine, Reagent Grade

2. Potassium Iodide, Reagent Grade

3. Tin, Metallic, Granulated or Powdered, Reagent Grade

4. Hydrochloric Acid, Concentrated, Reagent Grade

5. Antimony, Powered, Reagent Grade

6. Sodium Bicarbonate, Reagent Grade

7. Starch Indicator

(2) Prepare iodine-potassium iodide solution as follows:

(a) Dissolve 32.0 grams iodine and 100 g potassium iodide in 500 mL distilled water.

(b) Dilute to 1 liter with distilled water. Store in a glass-stoppered bottle in a cool, dark place.

(3) Standardize 0.25N iodine solution as follows:

(a) Weigh out about 0.2500 g tin to the nearest 0.1 mg and transfer to a 500-mL Erlenmeyer flask. Record exact weight of tin.

(b) Add 100 mL concentrated hydrochloric acid and heat gently until tin is completely dissolved.

(c) Add 100 mL distilled water and 1 g powdered antimony.

(d) Boil mixture 25 – 30 minutes.

(e) Remove flask from hot plate and immediately seal flask with a rubber stopper.

(f) Cool rapidly under cold, running water.

(g) Remove stopper, add 2 g sodium bicarbonate and 2 mL starch indicator solution, and immediately titrate with iodine solution to a blue end-point.

NOTE

Flask must be well sealed during cooling, and titration must be done rapidly to avoid oxidation of stannous tin before titration.

(4) Calculate normality of standard iodine solution as follows:

$$\text{Normality of iodine solution} = \frac{\text{wt of tin (g)}}{\text{mL iodine solution required} \times 0.0594}$$

l. Potassium Acid Phthalate Solution for Standardization of Bases.

(1) Chemicals required for preparation are:

1. Potassium Acid Phthalate ($KHC_8H_4O_4$) Reagent Grade

(2) Preparation – prepare potassium acid phthalate as follows:

(a) Dry a sample of approximately 30 g potassium acid phthalate for 2 – 3 hours at 110°C. Cool sample in a desiccator.

(b) Weigh out exactly 20.442 g of the phthalate and dissolve in freshly-boiled, cooled, distilled water.

(c) Adjust final volume to 1 liter in a volumetric flask. This solution is a primary 0.1N acid standard and is used to standardize basic solutions.

m. Standard Potassium Cyanide Solution, 0.1N.

WARNING

All cyanide solutions shall be prepared under appropriate fume booths, and the solution shall always be kept strongly basic. The mixing of cyanide salts or solutions with acid will result in the liberation of hydrogen cyanide gas which is extremely poisonous. Avoid eye and skin contact with cyanide in any form, and avoid breathing cyanide vapors or dust.

(1) Chemicals required to prepare 0.1N potassium cyanide solution are:

1. Potassium Cyanide, Reagent Grade
2. Ammonium Hydroxide, Concentrated, Reagent Grade
3. Potassium Iodide Solution
4. Nickel, Powdered, Reagent Grade
5. Sodium Hydroxide, Pellets, Reagent Grade
6. Silver Nitrate, Reagent Grade
7. Nitric Acid Concentrated, Reagent Grade
8. Citric Acid, Reagent Grade

(2) Prepare 0.1N potassium cyanide solution as follows:

(a) Dissolve 13.5 g potassium cyanide in 100 mL distilled water in a 1-liter volumetric flask.

(b) Dissolve, in a separate container, 2.5 g of sodium hydroxide in 100 mL distilled water.

(c) Dissolve in a separate container, 0.5 g silver nitrate in 100 mL distilled water.

(d) Add sodium hydroxide and silver nitrate solution to potassium cyanide solution; stir until thoroughly mixed: dilute to 1 liter with distilled water.

(3) Standardize 0.1N potassium cyanide solution as follows:

(a) Weigh out 0.100 g powdered nickel to the nearest 0.1 mg and dissolve in concentrated nitric acid; boil under hood until no nitrous oxide fumes are given off.

(b) Cool and add 10 mL distilled water.

(c) Add ammonium hydroxide until solution just becomes alkaline, using litmus paper as an indicator, and cool to room temperature.

NOTE

Excess ammonium hydroxide must be avoided.

(d) Add 1 mL potassium iodide solution, 10%.

(e) Titrate with potassium cyanide solution until the first appearance of a clear (non-turbid) solution is obtained.

(4) Calculate normality of potassium cyanide as follows:

$$\text{Normality of potassium cyanide solution} = \frac{\text{weight of nickel in mg}}{14.68 \times \text{mL of potassium cyanide solution}}$$

n. Standard Potassium Dichromate Solution, 0.1N.

(1) Chemicals required for solution are:

1. Potassium Dichromate, Reagent Grade

(2) Preparation of solution is as follows:

(a) Grind 5 grams pure potassium dichromate ($K_2Cr_2O_7$), spread in a thin layer on a watch glass and dry in an electric oven at 120° – 140°C for 2 – 4 hours.

(b) Cool in a desiccator and weigh to nearest mg.

(c) Transfer the powder to a 1-liter volumetric flask, carefully, and reweigh the watch glass with any adhering powder. (First weighing of glass with $K_2Cr_2O_7$ minus (–) second weighing of watch glass equals (=) weight of $K_2Cr_2O_7$ transferred.)

(d) Add distilled water to the flask, dissolve sample completely, and adjust final volume to 1-liter.

(3) Calculate normality as follows:

$$\text{Normality of potassium dichromate solution} = \frac{\text{wt of potassium dichromate}}{49.04}$$

o. Standard Potassium Ferrocyanide Solution.

(1) Chemicals required to prepare solution:

1. Potassium Ferrocyanide, Reagent Grade

2. Cadmium, Metal, Granulated, Reagent Grade

3. Uranium Acetate, Reagent Grade

(2) Standardize potassium ferrocyanide solution as follows:

(a) Weigh and dissolve 22.0 g potassium ferrocyanide $K_4Fe(CN)_6 \cdot 3H_2O$ in 1 liter of distilled water.

(b) Weigh and dissolve about 0.2500 g granulated cadmium metal in a solution of 5 mL distilled water and 5 mL concentrated hydrochloric acid in a 250-mL beaker. Record exact weight of cadmium.

(c) Add 150 mL of distilled water and heat almost to boiling.

(d) Titrate with ferrocyanide solution using a 5% solution of uranium acetate as an external indicator.

NOTE

End-point is obtained when just enough standard ferrocyanide solution is added to dissolve cadmium to produce a brown color when a drop of cadmium solution is added to uranium indicator solution using a procelain spot plate. Just before reaching the end-point, transfer a drop of the cadmium solution to a spot plate and add 1 drop of uranium acetate solution to it. Continue testing with this external indicator until a faint brown color is produced within 1 minute. This marks the end-point of the titration.

(3) Calculation of ferrocyanide concentration:

(a) The concentration of the potassium ferrocyanide solution is expressed in terms of milligrams of cadmium ion equivalent to 1 mL of the solution.

(b) For example, if 250.0 mg of cadmium required 50 mL of ferrocyanide, the cadmium-ferrocyanide relationship is determined as follows:

$$\frac{250}{50} = 5.0 \text{ mg Cd/mL of standard solution}$$

(4) Calculate cadmium factor as follows:

$$\text{cadmium factor} = \frac{\text{wt of cadmium (g)} \times 26.8}{\text{mL ferrocyanide required}}$$

p. Potassium Fluoride Solution.

WARNING

Fluoride compounds are very corrosive. Skin and eye contact, and inhalation of fluoride compounds must be avoided. Prepare compound under a fume booth, and store solution under hood.

(1) Dissolve 50.0 g potassium fluoride ($KF.\ 2H_2O$) in 100 mL distilled water. Neutralize, using 5 drops phenolphthalein.

(2) If potassium fluoride solution is acidic (colorless), add dropwise 1.0N sodium hydroxide until a faint pink color appears. This indicates a basic pH.

(3) Titrate dropwise 0.1N sulfuric acid until faint pink color disappears.

(4) Store potassium fluoride solution in an inert wax-coated or plastic bottle.

q. Primary Standardization, Potassium Hydroxide Solution, 0.1N.

(1) Chemicals required for solution preparation are:

1. Potassium Hydroxide, Reagent Grade

2. Potassium Acid Phthalate Solution

3. Phenolphthalein Indicator

(2) Preparation – prepare potassium hydroxide solution as follows:

(a) Prepare about 1.5 liters distilled water by boiling vigorously for at least 15 minutes to remove carbon dioxide. Allow water to cool to room temperature, and use within 4 hours after boiling.

(b) Weigh out 6.0 g Reagent Grade potassium hydroxide and dissolve in distilled water. Adjust final volume to 1000 mL in a 1-liter volumetric flask.

(c) Transfer solution to a suitable bottle provided with a 2-hole stopper. Insert a soda-lime or Ascarite tube through 1 hole to prevent access of carbon dioxide. Insert a siphon tube with a pinch cock at the lower end through the other hole.

(3) Standardization – standardize 0.1N potassium hydroxide solution as follows:

(a) Measure 3 each 40.0 mL samples of 0.1N potassium acid phthalate solution from a clean dry buret into 250-mL Erlenmeyer flasks. Add 80 mL of distilled water and 3 – 4 drops of phenolphthalein indicator.

(b) Fill another clean dry buret with the potassium hydroxide solution and titrate to a faint pink end-point that persists for at least 30 seconds.

(c) Record exact reading.

(d) Repeat the above titration 2 more times so that an average value of 3 titrations may be obtained.

(4) Calculate normality of 0.1N potassium hydroxide solution as follows:

Normality of 0.1N potassium hydroxide solution =

$$\frac{\text{mL potassium acid phthalate} \times \text{normality of potassium acid phthalate}}{\text{mL potassium hydroxide solution required}}$$

NOTE

The average normality value of 3 titrations shall be the normality of this potassium hydroxide solution.

r. Standard Potassium Hydroxide Solution, 0.1N.

(1) Chemicals required are:

1. Standard 1.0N Potassium Hydroxide Solution

(2) Prepare 0.1N potassium hydroxide as follows:

(a) Pipet 100 mL of 1.0N potassium hydroxide into a 1-liter volumetric flask.

(b) Dilute to exactly 1 liter with distilled water.

(3) Calculate normality as follows:

Normality of 0.1N potassium hydroxide =

$$\frac{\text{normality of 1.0N potassium hydroxide}}{10}$$

s. Standard Potassium Hydroxide Solution, 1.0N.

(1) Chemicals required to prepare 1.0N potassium hydroxide solution are:

1. Potassium Hydroxide, Pellets, Reagent Grade

2. Standard 1.0N Hydrochloric Acid Solution (Normality must be known to 3 significant figures.)

3. Methyl Orange Indicator

(2) Prepare standard potassium hydroxide solution as follows:

(a) Dissolve 56.0 g of potassium hydroxide (K OH) in distilled water. Dilute to 1 liter in a volumetric flask and mix well.

(b) Pipet 20 mL of 1.0N hydrochloric acid into a 250-mL Erlenmeyer flask and add 2 drops methyl orange indicator.

(c) Add 80 mL distilled water.

(d) Titrate with standard potassium hydroxide to first perceptible color change from red to yellow.

(3) Calculate normality of potassium hydroxide as follows:

$$\text{Normality of 1.0N potassium hydroxide} = \frac{20 \times (\text{normality of hydrochloric acid})}{\text{mL of potassium hydroxide}}$$

(4) A total of 3 titrations should be performed and the average normality value of the 3 titrations shall be the normality of the potassium hydroxide solution.

t. Standard Potassium Iodate Solution, 0.1N.

(1) Chemicals required to prepare and standardize a 0.1N potassium iodate solution are:

1. Antimony, Powdered, Reagent Grade
2. Potassium Iodate, Reagent Grade
3. Potassium Iodide, Reagent Grade
4. Potassium Hydroxide, Pellets, Reagent Grade
5. Tin, Metal, Powdered, Reagent Grade
6. Sulfuric Acid, Concentrated, Reagent Grade
7. Hydrochloric Acid, Concentrated, Reagent Grade
8. Starch Indicator Solution
9. Sodium Bicarbonate, Reagent Grade

(2) Prepare potassium iodate solution as follows:

(a) Dissolve 3.5 g potassium iodate, 25 g potassium iodide, and 2.5 g potassium hydroxide in 500 mL distilled water and mix thoroughly.

(b) Dilute to 1 liter with distilled water and mix well.

(3) Standardize solution as follows:

(a) Weigh out about 0.0500 g powdered tin and transfer to a 500-mL Erlenmeyer flask. Record exact weight of tin.

(b) Add 20 mL sulfuric acid and heat until tin is completely dissolved, and cool to room temperature.

(c) Add 150 mL distilled water, 60 mL concentrated hydrochloric acid, 1 g powdered antimony, and boil 25 – 30 minutes.

(d) Prepare 250 mL saturated sodium bicarbonate solution and place in a 300-mL beaker.

(e) Insert single hole stopper with tube into 500-mL Erlenmeyer flask; place lower end of tube into beaker of sodium bicarbonate.

(f) Cool tin solution to room temperature.

(g) Remove stopper, add 5 mL starch indicator and titrate immediately with standard potassium iodate solution to a permanent blue color.

(h) Calculate normality of potassium iodate solution as follows:

$$\text{Normality of 0.1N potassium iodate} = \frac{16.82 \times \text{wt of tin (g)}}{\text{mL potassium iodate solution}}$$

u. Potassium Permanganate Solution, 0.05N.

(1) Materials required to prepare and standardize a 0.05N potassium permanganate solution are:

1. Potassium Permanganate, Reagent Grade
2. Sodium Oxalate, Reagent Grade
3. Sulfuric Acid, Concentrated, Reagent Grade

(2) Prepare solution as follows:

(a) Dissolve 1.65 g potassium permanganate in 1 liter of distilled water and allow to stand for 2 or 3 days in a covered container.

(b) Carefully siphon potassium permanganate solution into a clean storage container using clean glass tubing.

NOTE

The first 20 – 30 mL of solution shall be discarded and the last inch allowed to remain in the original container. Keep this solution free from contact with rubber. Store solution in a dark bottle.

(3) Standardize solution as follows:

(a) Weigh 3 samples of sodium oxalate of approximately 0.3 g each into 3 separate clean 500-mL Erlenmeyer flasks.

(b) Add 150 mL distilled water and 4 mL concentrated sulfuric acid to each flask. Heat to almost boiling to dissolve the sodium oxalate.

(c) Titrate warm solution with potassium permanganate at a rate of about 10 mL per minute or less at first, then slowly add 1 drop of permanganate solution at a time until a faint permanent pink end-point is obtained.

(4) Calculate normality of potassium permanganate solution as follows:

$$\text{Normality of 0.05N potassium permanganate} = \frac{\text{wt of sodium oxalate (g)}}{0.0670 \times \text{mL potassium permanganate required}}$$

v. Standard Potassium Permanganate Solution, 0.1N.

(1) Chemicals required to prepare and standardize a 0.1N potassium permanganate solution are:

1. Potassium Permanganate, Reagent Grade
2. Sodium Oxalate, Reagent Grade
3. Sulfuric Acid, Concentrated, Reagent Grade

(2) Prepare solution as follows:

(a) Dissolve 3.3 g potassium permanganate in 1 liter distilled water; allow to stand for 2 or 3 days in a covered container.

(b) Carefully siphon potassium permanganate solution into a clean storage container using clean glass tubing.

NOTE

The first 20 – 30 mL of solution shall be discarded and the last inch allowed to remain in the original container. Keep this solution free from contact with rubber. Store solution in a dark bottle.

(3) Standardize potassium permanganate solution as follows:

(a) Weigh 3 samples of sodium oxalate of approximately 0.3 g each in 3 separate clean 500-mL Erlenmeyer flasks.

(b) Add 150 mL distilled water and 4 mL sulfuric acid to each flask and heat to almost boiling to dissolve the sodium oxalate.

(c) Titrate warm solution with potassium permanganate at a rate of about 10 mL per minute or less at first, then titrate slowly 1 drop of permanganate at a time until a faint permanent pink end-point is obtained.

(4) Calculate normality of potassium permanganate solution as follows:

$$\text{Normality of 0.1N potassium permanganate} = \frac{\text{wt of sodium oxalate (g)}}{0.0670 \times \text{mL potassium permanganate required}}$$

w. Standard Potassium Thiocyanate Solution, 0.1N.

(1) Chemicals required to prepare and standardize a 0.10N potassium thiocyanate solution are:

1. Potassium Thiocyanate, Reagent Grade
2. Ferric Ammonium Sulfate Indicator Solution
3. Standard Silver Nitrate Solution, 0.1N

(2) Prepare solution as follows:

(a) Dissolve 9.7 g potassium thiocyanate in 1 liter distilled water.

(b) Pipet 10 mL silver nitrate solution into a 250-mL Erlenmeyer flask and add 100 mL distilled water.

(c) Add 1 mL ferric ammonium sulfate indicator solution.

(d) Titrate with potassium thiocyanate to a faint pink color.

(3) Calculate normality of 0.1N potassium thiocyanate as follows:

$$\text{Normality of potassium thiocyanate} = \frac{10.0 \times \text{normality of silver nitrate}}{\text{mL of potassium thiocyanate solution required}}$$

x. Standard Sodium Cyanide Solution, 0.5N.

(1) Chemicals required for solution preparation are:

1. Sodium Cyanide, Reagent Grade
2. Ammonium Hydroxide, Concentrated, Reagent Grade
3. Potassium Iodide Solution, 10%
4. Nickel, Metal, Reagent Grade
5. Sodium Hydroxide, Reagent Grade
6. Silver Nitrate, Reagent Grade
7. Nitric Acid, Concentrated, Reagent Grade

8. Citric Acid Solution (To prepare, dissolve 100 g citric acid in 100 mL distilled water.)

WARNING

Cyanide solution shall be prepared and kept under an approved fume booth. Avoid eye and skin contact, and avoid breathing cyanide vapors and dust.

(2) Prepare 0.5N sodium cyanide solution as follows:

(a) Dissolve 24.51 g sodium cyanide in 100 mL distilled water in a 1-liter container.

(b) Dissolve 5.0 grams of sodium hydroxide in 100 mL distilled water, in a separate container.

(c) Dissolve 1.7 g silver nitrate in 100 mL distilled water in a separate container.

(d) Add the sodium hydroxide and silver nitrate solutions to the sodium cyanide solution. Stir until thoroughly mixed and dilute to 1 liter with distilled water.

(3) Standardize the sodium cyanide solution as follows:

(a) Dissolve approximately 0.2 g nickel, weighed to the nearest 0.1 milligram, in concentrated nitric acid.

(b) Boil nickel solution under a hood until no nitrous oxide fumes are given off.

(c) Cool and add 10 mL citric acid solution.

(d) Add ammonium hydroxide until solution just becomes alkaline, using litmus paper as an indicator.

NOTE

Excess ammonium hydroxide must be avoided.

(e) Add 1 mL potassium iodide solution, 10%.

(f) Titrate with sodium cyanide solution until the first appearance of a clear (non-turbid) solution is obtained.

(4) Calculate nickel factor as follows:

Nickel factor =

$$\frac{\text{weight of nickel in g}}{\text{mL sodium cyanide solution required}}$$

(5) Calculate normality of 0.5N sodium cyanide as follows:

Normality of 0.5N sodium cyanide =

$$\frac{\text{wt of nickel (mg)}}{\text{mL sodium cyanide solution} \times 14.68}$$

y. Primary Standardization, Sodium Hydroxide Solution, 0.1N.

(1) Chemicals required for preparation are:

1. Sodium Hydroxide, Reagent Grade

2. Potassium Acid Phthalate Solution

3. Phenolphthalein Indicator

(2) Preparation – prepare sodium hydroxide solution as follows:

(a) Prepare about 1:5 liter of distilled water by boiling vigorously for at least 15 minutes to remove carbon dioxide. Allow water to cool to room temperature, and use within 4 hours after boiling.

(b) Weigh out 5.0 g of sodium hydroxide pellets and dissolve in the distilled water. Adjust final volume to 1000 mL in a 1-liter volumetric flask.

(c) Transfer solution to a suitable bottle provided with a 2-hole stopper. Insert a soda-lime or Ascarite tube through 1 hole to prevent access of carbon dioxide. Insert a siphon tube with a pinch cock at the lower end through the other hole.

(3) Standardization – standardize sodium hydroxide as follows:

(a) Measure 3 each 40.0 mL of samples of 0.1N potassium acid phthalate solution from a clean dry buret into 250-mL Erlenmeyer flasks. Add 80 mL of distilled water and 3 or 4 drops of phenolphthalein indicator.

(b) Fill another clean dry buret with the sodium hydroxide and titrate to a faint pink end-point that persist for at least 30 seconds.

(c) Record exact reading.

(d) Repeat the above titration 2 more times so that an average value of 3 titrations will be obtained.

(4) Calculate normality of solution as follows:

$$\text{Normality of 0.1N sodium hydroxide} = \frac{\text{mL potassium acid phthalate} \times \text{normality of potassium acid phthalate}}{\text{average mL sodium hydroxide solution required}}$$

z. Standard Sodium Hydroxide Solution, 0.1N.

(1) Materials required for solution preparation are:

1. Sodium Hydroxide, Pellets, Reagent Grade

2. Hydrochloric Acid Solution, 0.1N

3. Methyl Orange Indicator

(2) Prepare solution as follows:

(a) Dissolve 4.0 g sodium hydroxide in 500 mL distilled water, and dilute to 1 liter with distilled water in a volumetric flask.

(b) Pipet 20 mL 0.1N hydrochloric acid into a 250-mL Erlenmeyer flask, dilute to 100 mL with distilled water, and add 2 – 3 drops of methyl orange indicator.

(c) Titrate with 0.1N sodium hydroxide to the first perceptible color change from red to yellow.

(3) Calculate normality of sodium hydroxide as follows:

$$\text{Normality of 0.1N sodium hydroxide} = \frac{\text{mL hydrochloric acid} \times \text{normality}}{\text{mL sodium hydroxide required}}$$

aa. Standard Sodium Hydroxide Solution, 0.5N.

(1) Chemicals required to prepare solution are:

1. Sodium Hydroxide, Pellets, Reagent Grade

2. Hydrochloric Acid Solution, 0.5N(Normality must be known to 3 significant figures.)

3. Methyl Orange Indicator

(2) Preparation of solution:

(a) Dissolve 20 g sodium hydroxide in 500 mL distilled water with stirring and cool to room temperature. Dilute to 1 liter with distilled water in a volumetric flask.

(b) Pipet 20 mL of 0.5N hydrochloric acid into a 250-mL Erlenmeyer flask, dilute to 100 mL with distilled water and add 2 – 3 drops of methyl orange indicator.

(c) Titrate with 0.5N sodium hydroxide to first perceptible color change from red to yellow.

(3) Calculate normality of sodium hydroxide as follows:

$$\text{Normality of 0.5N sodium hydroxide} = \frac{\text{mL hydrochloric acid} \times \text{normality}}{\text{mL sodium hydroxide required}}$$

ab. Standard Sodium Hydroxide Solution, 1.0N.

(1) Chemicals required to prepare and standardize a 1.0N sodium hydroxide solution are:

1. Sodium Hydroxide Pellets, Reagent Grade

2. Hydrochloric Acid Standard 1.0N Solution (Normality must be known to 3 significant figures.)

3. Methyl Orange Indicator

WARNING

Sodium hydroxide is extremely corrosive and skin contact with the pellet form or concentrated solutions must be avoided. When making sodium hydroxide solutions, the flask holding the solution should be kept in a sink until the heat of the reaction subsides to near room temperature. Observe flask for signs of cracking before removing from sink.

(2) Prepare solution as follows:

(a) Dissolve 40 g sodium hydroxide in distilled water, dilute to 1 liter in a volumetric flask, and mix well.

(b) Pipet 20 mL 1.0N hydrochloric acid into a 250-mL Erlenmeyer flask, add 2 drops of methyl orange indicator and dilute to 100 mL with distilled water.

(c) Titrate with standard sodium hydroxide to first perceptible color change from red to yellow.

(3) Calculate normality of sodium hydroxide as follows:

Normality of 1.0N sodium hydroxide =

$$\frac{\text{mL 1.0N hydrochloric acid x normality of HCl}}{\text{mL sodium hydroxide required}}$$

ac. Standard Silver Nitrate Solution, 0.1N.

(1) Chemicals required for solution preparation are:

1. Potassium Chromate Indicator
2. Silver Nitrate, Reagent Grade
3. Standard 0.1N Hydrochloric Acid Solution
4. Standard 0.1N Sodium Hydroxide Solution

(2) Preparation of solution is as follows:

(a) Dissolve 17.0 g silver nitrate in 1 liter distilled water in a volumetric flask.

(b) Pipet 25 mL standard hydrochloric acid solution into a 250-mL Erlenmeyer flask.

(c) Neutralize with standard 0.1N sodium hydroxide solution.

(d) Add 2 or 3 drops of potassium chromate indicator.

(e) Titrate with silver nitrate solution until white precipitate takes on a faint red or brown tint which is the end-point.

(3) Calculate the normality of silver nitrate solution as follows:

Normality of silver nitrate =

$$\frac{\text{25 x normality of hydrochloric acid solution}}{\text{mL of silver nitrate solution required}}$$

ad. Standard Silver Nitrate Solution, 0.25N.

(1) Chemicals required for preparation of silver nitrate solution are:

1. Potassium Chromate Indicator
2. Silver Nitrate, Reagent Grade
3. Standard 0.1N Hydrochloric Acid Solution
4. Standard 0.1N Sodium Hydroxide Solution

(2) Preparation and standardization of 0.25N silver nitrate is as follows:

(a) Dissolve 42.5 g of silver nitrate in 1 liter of distilled water in a volumetric flask.

(b) Pipet 25 mL of standard hydrochloric acid solution into a 250-mL Erlenmeyer flask.

(c) Neutralize with 0.1N sodium hydroxide solution.

(d) Add 2 or 3 drops of potassium chromate indicator.

(e) Titrate with standard silver nitrate until white precipitate takes on a faint red or brown tint, which is the end-point.

(3) Calculate normality of 0.25N silver nitrate as follows:

Normality of 0.25N silver nitrate =

$$\frac{\text{25 x normality of 0.1N hydrochloric acid solution}}{\text{mL of silver nitrate solution required}}$$

ae. Standard Sodium Thiocyanate Solution, 0.1N.

(1) Chemicals needed for preparation of solution are:

1. Sodium Thiocyanate, Reagent Grade
2. Silver Nitrate Solution, 0.1N
3. Nitric Acid, Concentrated, Reagent Grade
4. Ferric Ammonium Sulfate Solution

(2) Solution preparation is as follows:

(a) Dissolve 9.00 g sodium thiocyanate in 1 liter distilled water.

(b) Pipet 25 mL 0.1N silver nitrate solution into a 250-mL Erlenmeyer flask.

(c) Add 5 mL nitric acid, 1 mL ferric ammonium sulfate solution, and 50 mL distilled water to flask.

(d) Titrate with sodium thiocyanate until a reddish-brown tinge appears in solution which is permanent on shaking.

(3) Calculate normality of sodium thiocyanate as follows:

Normality of 0.1N sodium thiocyanate =

$$\frac{2.5}{\text{mL sodium thiocyanate required}}$$

af. Standard Sodium Thiosulfate Solution, 0.01N.

(1) Chemicals required for preparation of 0.01N sodium thiosulfate are:

1. Standard Sodium Thiosulfate Solution

(2) Prepare solution as follows:

(a) Pipet 100 mL 0.10N sodium thiosulfate solution into 1-liter volumetric flask.

(b) Dilute to mark using distilled water and mix well.

(3) Calculate normality as follows:

$$\text{Normality of 0.01N sodium thiosulfate} = \frac{\text{normality of 0.1N sodium thiosulfate}}{10}$$

ag. Standard Sodium Thiosulfate Solution, 0.1N.

WARNING

Prepare strong acid solutions by placing the container with water in a lead-lined or other acid-proof sink. Add acid slowly with stirring to prevent splattering. Allow container and solution to cool before removing from sink. Avoid eye and skin contact with acid, and avoid inhalation of acid vapors. Mixing of acids should be conducted in acid fume booths or well-ventilated work areas.

(1) Chemicals required to prepare 0.1N sodium thiosulfate solution are:

1. Sodium Thiosulfate, Reagent Grade

2. Nitric Acid, 1.1 (To prepare, add 500 mL nitric acid slowly to 500 mL distilled water.)

3. Sulfuric Acid, Reagent Grade

4. Ammonium Hydroxide, Concentrated, Reagent Grade

5. Acetic Acid, 30% (To prepare, add 30 mL glacial acetic, Reagent Grade, to 70 mL distilled water.)

6. Potassium Iodide Solution, 30% (To prepare, dissolve 30 g potassium iodide, Reagent Grade, in 100 mL distilled water.)

7. Starch Indicator

8. Copper, Wire or Foil, Reagent Grade

(2) Solution preparation is as follows:

(a) Dissolve 25 g sodium thiosulfate in 1 liter distilled water. Hold for titration.

(b) Weigh out about 0.2000 g copper wire or foil and dissolve in 5 mL 1:1 mixture of nitric acid and water. Record exact weight of copper.

(c) Add 5 mL sulfuric acid and heat carefully until dense white fumes evolve and the copper solution is clear.

(d) Cool and add 100 mL distilled water to copper solution.

(e) Add concentrated ammonium hydroxide until a permanent dark blue color is obtained.

(f) Boil for 15 minutes or until a faint order of ammonia remains.

(g) Add 10 mL of 30% acetic acid and 15 mL of 30% potassium iodide solution, and shake to mix.

(h) Titrate with sodium thiosulfate solution until dark brown color begins to fade.

(i) Add 5 mL of starch indicator solution and continue titrating with swirling, until the blue color disappears for about 1 minute.

(3) Calculate normality of sodium thiosulfate solution as follows:

$$\text{Normality of 0.1N sodium thiosulfate} = \frac{\text{weight of copper in g}}{\text{mL sodium thiosulfate solution required} \times 0.0635}$$

ah. Standard Sulfuric Acid Solution, 0.10N.

(1) Dilute 2.8 mL concentrated sulfuric acid in 500 mL distilled water. Cool and dilute to exactly 1000 mL in a volumetric flask with distilled water.

(2) Standardize and calculate:

(a) Pipet three 25 mL samples of the acid into three clean 250-mL Erlenmeyer flasks.

(b) Add 75 mL distilled water and 2 or 3 drops phenolphthalein to each flask.

(c) Titrate with standard 0.5N sodium hydroxide solution to a faint pink end-point which persists for at least 30 seconds.

(3) Calculate normality as follows:

$$\text{Normality of 0.5N sulfuric acid} = \frac{\text{mL sodium hydroxide x normality of sodium hydroxide}}{\text{mL sulfuric acid solution}}$$

ai. Standard Sulfuric Acid Solution, 0.25N.

(1) Dilute 7.0 mL concentrated sulfuric acid in 500 mL distilled water. Cool and dilute to exactly 1000 mL in a volumetric flask with distilled water.

(2) Standardize and calculate:

(a) Pipet three 25 mL samples of the acid into three clean 250-mL Erlenmeyer flasks.

(b) Add 75 mL distilled water and 2 – 3 drops phenolphthalein to each flask.

(c) Titrate with standard 0.5N sodium hydroxide solution to a faint pink end-point which persists for at least 30 seconds.

(3) Calculate normality as follows:

$$\text{Normality of 0.5N sulfuric acid} = \frac{\text{mL sodium hydroxide x normality of sodium hydroxide}}{\text{mL sulfuric acid solution}}$$

(4) The average value of 3 valid titrations shall be the normality of the sulfuric acid.

aj. Standard Sulfuric Acid Solution, 0.5N.

(1) Chemicals required for solution are:

1. Sulfuric Acid, Concentrated, Reagent Grade

2. Standard 0.5N Sodium Hydroxide Solution

3. Phenolphthalein Indicator

(2) Prepare solution as follows:

(a) Dilute 14.0 mL concentrated sulfuric acid in 500 mL distilled water; cool and dilute to exactly 1000 mL.

(b) Pipet three 25 mL samples of the acid into three clean 250-mL Erlenmeyer flask.

(c) Add 75 mL distilled water and 2 – 3 drops phenolphthalein to each flask.

(d) Titrate with standard 0.5N sodium hydroxide solution to a faint pink end-point which persists for at least 30 seconds.

(3) Calculate normality as follows:

$$\text{Normality of 0.5N sulfuric acid} = \frac{\text{mL sodium hydroxide x normality of sodium hydroxide}}{\text{mL sulfuric acid solution}}$$

(4) The average value of 3 valid titrations shall be the normality of the sulfuric acid.

ak. Standard Sulfuric Acid Solution, 1.0N.

(1) Chemicals required for solution are:

1. Sulfuric Acid, Concentrated, Reagent Grade

2. Standard 1.0N Sodium Hydroxide Solution

3. Phenolphthalein Indicator

(2) Solution preparation is as follows:

WARNING

Concentrated acids shall be added slowly and with stirring to water to avoid overheating and spattering. The mixing flask should be placed in a lead-lined or other acid-proof type sink. Allow flask to cook and observe for signs of cracking before removing from sink. Avoid eye and skin contact with acid, and inhalation of acid vapors. Mixing of acids should be conducted in fume booths or well-ventilated work areas.

(a) Dilute 28.0 mL sulfuric acid in 500 mL distilled water. Cool and dilute to exactly 1000 mL in a volumetric flask.

(b) Pipet three 25 mL samples of the acid into three clean 250-mL Erlenmeyer flasks.

(c) Add 75 mL distilled water and 2 – 3 drops of phenolphthalein indicator to each flask.

(d) Titrate with standard 1.0N sodium hydroxide solution to a faint pink end-point which persists for at least 30 seconds. Make 3 separate titrations for greater accuracy.

(3) Calculate normality of 1.0N sulfuric acid as follows:

$$\text{Normality of 1.0N sulfuric acid} = \frac{\text{mL sodium hydroxide x normality of sodium hydroxide}}{\text{mL sulfuric acid solution}}$$

(4) The average value of 3 valid titrations shall be the normality of the sulfuric acid solution.

29.151 PREPARATION OF NONSTANDARD SOLUTIONS.

a. Ammonium Bifluoride Solution, 10% – dissolve 100 g NH_4HF_2 in about 750 mL distilled water in a 1-liter volumetric flask. Adjust final volume to exactly 1 liter with distilled water and mix.

WARNING

Avoid eye and skin contact with acid, and avoid breathing acid vapors. Mixing of acids should be conducted in acid fume booths or in well-ventilated work areas.

b. Aqua Regia – add 1 part nitric acid (concentrated) to 3 parts hydrochloric acid (concentrated) and stir to mix. Add 1 part distilled water slowly and with stirring, if aqua regia is to be stored for any length of time. Objectionable quantities of chlorine and other gases are evolved if aqua regia is not diluted before storage.

c. Barium Chloride Solution, 10% – dissolve 100 g of $BaCl_2$ in about 750 mL distilled water in a 1-liter volumetric flask. Adjust final volume to exactly 1 liter with distilled water and mix.

d. Barium Chloride Solution, 20% – dissolve 200 g of $BaCl_2$ in about 750 mL distilled water in a 1-liter volumetric flask. Adjust final volume to exactly 1 liter with distilled water and mix.

e. Barium Chloride Solution (Sulfate Solution B) – dissolve 296 g $BaCl_2 \cdot 2H_2O$ in 750 mL distilled water, and dilute to 1 liter with distilled water and mix.

f. Barium Nitrate Solution, 10% – dssolve 100 g $Ba(NO_3)_2$ in about 750 mL distilled water in a 1-liter volumetric flask. Adjust final volume to exactly 1 liter with distilled water and mix.

WARNING

Avoid eye and skin contact with liquid bromine, and avoid inhalation of bromine vapors. Open sealed glass vials of bromine with extreme caution under approved fume booth. Bromine-water mixture shall also be prepared under the fume booth.

g. Bromine-Water – add 20 mL Reagent Grade bromine to 400 mL distilled water. Store in a glass flask and use a glass stopper coated with petrolatum.

h. Buffer Solution, pH 10 (Ammonium Chloride in Ammonium Hydroxide Solution).

(1) Chemicals required to make solution are:

1. Ammonium Chloride, Reagent Grade

2. Ammonium Hydroxide, Reagent Grade

(2) Preparation of solution is as follows:

(a) Dissolve 70 g ammonium chloride in 570 mL ammonium hydroxide. Mix well.

(b) Dilute solution to 1000 mL with distilled water. Mix and store in plastic container.

i. Citric Acid Solution, 20% and 10% – dissolve 200 g citric acid, Reagent Grade, in 1000 mL distilled water in a 1-liter volumetric flask for a 20% solution. Dilute 500 mL of the 20% solution with 500 mL distilled water to make a 10% solution of citric acid.

j. Cupferron Solution – dissolve 6.0 g of ammonium nitrosophenylhydroxylamine (cupferron) in 100 mL distilled water. This solution is stable for a week or longer if protected from light in an opaque container.

k. Ferric Ammonium Sulfate Solution – dissolve 2.0 g ferric ammonium sulfate, Reagent Grade, in distilled water and dilute to 100 mL in a volumetric flask.

l. Ferrous Ammonium Sulfate Solution, 0.1N.

(1) Dissolve 39.2158 g ferrous ammonium sulfate ($FeSO_4 \cdot (NH_4)_2SO_4 \cdot 6H_2O$) in 500 mL 1.0N sulfuric acid.

(2) Dilute to 1 liter with distilled water.

m. Ferrous Ammonium Sulfate, Saturated Solution – add slowly, while stirring, ferrous ammonium sulfate, Reagent Grade to 500 mL 1.0N sulfuric acid solution in a flask until about ½ – 1 inch of the salt remains undissolved on the bottom of the flask. The presence of undissolved ferrous ammonium sulfate indicates saturation of the solution.

n. Ferrous Sulfate Solution, 0.5 Molar – dissolve 139 g ferrous sulfate, Reagent Grade ($FeSO_4 \cdot 7H_2O$) distilled water containing 10 mL concentrated sulfuric acid, Reagent Grade. Dilute to 1 liter with distilled water.

WARNING

Concentrated formaldehyde solutions may cause irritation of skin, eyes, nose, and throat. Avoid eye and skin contact with formaldehyde, and avoid breathing vapors of formaldehyde. Use only in fume booths or in well-ventilated work areas.

o. Formaldehyde Solution, 3.7% – add 100 mL of 37% formaldehyde, Reagent Grade, (37% aqueous solution) to a 1-liter volumetric flask. Dilute to final volume of 1 liter with distilled water.

p. Hydrochloric Acid Solution, 25% by Volume.

WARNING

The solution container should be placed in a lead-lined or other type of acid-proof sink while the solution is being made up and allowed to cool.

(1) Add slowly 250 mL concentrated hydrochloric acid, Reagent Grade, to 750 mL distilled water in a 2-liter beaker with continuous stirring.

(2) Allow to cool, and examine breaker for signs of cracking before removing from sink.

(3) Avoid eye and skin contact with acid, and avoid breathing acid fumes. Mixing of acids should be conducted in acid fume booths or in well-ventilated work areas.

q. Hydrochloric Acid Solution, 50% by Volume.

WARNING

The solution container should be placed in a lead-lined or other type of acid-proof sink while the solution is being made up and allowed to cool.

(1) Add slowly 500 mL concentrated hydrochloric acid, Reagent Grade, with continuous stirring to 500 mL distilled water in a 2-liter breaker.

(2) Allow to cool and examine beaker carefully for signs of cracking before removing from sink.

(3) Avoid eye and skin contact with acid, and avoid breathing acid fumes. Mixing of acids should be conducted in acid fume booths or in well-ventilated work areas.

r. Nitron Reagent, 10% – dissolve 10 g nitron (1, 4 diphenyl-3, 5-endo-amilino-4, 5-dihydro-1, 2, 4-triazole) in 5 mL glacial acetic acid and 95 mL distilled water. Filter solution with slight suction through an alundum crucible. Keep solution in a dark bottle.

s. Potassium Chromate Solution, 10% – dissolve 100 g potassium chromate (K_2CrO_4), Reagent Grade, in 1 liter of distilled water.

t. Potassium Ferricyanide Solution.

(1) Chemicals required to prepare solution:

1. Potassium Ferricyanide, Reagent Grade

2. Sodium Carbonate, Reagent Grade

(2) Prepare potassium ferricyanide solution as follows:

(a) Add 1.00 g potassium ferricyanide and 0.02 g sodium carbonate to a small amount of distilled water in a 100-mL volumetric flask.

(b) Dilute to mark with distilled water and transfer to a brown bottle. Store in a dark place.

u. Potassium Iodate Solution, Approximately 0.08N – dilute 1 liter of 0.16N potassium iodate solution with 1 liter of distilled water.

v. Potassium Iodate Solution, Approximately 0.16N.

(1) Chemicals required for preparation are:

1. Potassium Iodate, Reagent Grade

2. Potassium Iodide, Reagent Grade

3. Potassium Hydroxide, Reagent Grade

(2) Solution preparation is as follows:

(a) Dissolve 5.6 g potassium iodate, 40.0 g potassium iodide, and 4.0 g potassium hydroxide in 500 mL distilled water.

(b) Dilute to 2 liters in a volumetric flask with distilled water and mix thoroughly.

w. Potassium Iodide Solution, 10% – dissolve 100 g of potassium iodide in 1 liter of distilled water and mix well.

x. Potassium Iodide Solution, 20% – dissolve 200 g of potassium iodide in 1 liter of distilled water and mix well.

y. Potassium Iodide Solution, 40% – dissolve 400 g of potassium iodide in 1 liter of distilled water and mix well.

z. Reducing Solution for Sulfate Determination – mix 100 mL concentrated hydrochloric acid, 150 mL isopropyl alcohol and 250 mL acetic acid.

aa. Silver Nitrate Solution, 10% – dissolve 25 g silver nitrate, Reagent Grade, in 250 mL distilled water in a volumetric flask. Store in a dark, glass-stoppered bottle.

ab. Sodium Acetate, Saturated Solution – place 200 g sodium acetate, Reagent Grade, in 100 mL distilled water and invert flask several times to insure maximum solubility. Make sure that an excess amount of undissolved sodium acetate remains on the bottom of the flask. Undissolved sodium acetate indicates a saturated solution.

ac. Sodium Carbonate Solution, 10% – dissolved 100 g sodium carbonate, Reagent Grade, in 1 liter distilled water in a volumetric flask.

ad. Sodium Cyanide Solution, 10%.

WARNING

Cyanide solutions should always be prepared in a fume booth and kept strongly basic. Addition of any kind of acid to cyanide solutions may liberate hydrogen cyanide gas which is highly poisonous. Avoid eye and skin contact and inhalation of cyanide in any form.

(1) Dissolve 10 g sodium hydroxide, Reagent Grade, in 100 mL distilled water in a 1-liter volumetric flask and add the previously prepared sodium hydroxide solution to prevent hydrogen cyanide formation.

(2) Adjust final volume to 1000 mL in the volumetric flask.

ae. Sodium Hydroxide Solution, 20%.

WARNING

A considerable amount of heat will be liberated as the sodium hydroxide goes into solution. Place the flask in a sink and allow to cool to room temperature before removing from sink.

(1) Dissolve 40 g sodium hydroxide in 100 mL distilled water and cool to room temperature.

(2) Dilute to final volume of 200 mL with distilled water.

af. Sodium Hydroxide Solution, 40%.

WARNING

A considerable amount of heat will be liberated as the sodium hydroxide goes into solution. Place flask in a sink and allow to cool to room temperature before removing from sink.

(1) Dissolve 80 g sodium hydroxide in 100 mL distilled water and cool to room temperature.

(2) Dilute to final volume of 200 mL with distilled water.

ag. Sodium Pyrohosphate-Ammonium Chloride-Potassium Iodide Solution – dissolve 50 g sodium pyrophosphate, ($Na_4\ P_2O_7.\ 10H_2O$), 50 g ammonium chloride, (NH_4Cl), and 2 g potassium iodide (KI) in distilled water to make a final volume of 1000 mL solution.

ah. Starch Solution, 1:150.

(1) Make a paste of 1.0 g starch and small amount of cold water.

(2) Add sufficient hot distilled water to make an approximate volume of 150 mL and boil 2 – 3 minutes.

(3) Add 0.05 g thymol or 0.05 g salicylic acid as a preservative and adjust final volume to 150 mL.

ai. Starch Solution, 10%.

(1) Make a paste of 10.0 g soluble starch in 30 mL cold distilled water and add slowly to about 70 mL boiling distilled water.

(2) Continue boiling for 5 minutes and allow to cool. Add 0.05 g thymol or 0.05 g salicylic acid as a preservative.

(3) Adjust final volume to 100 mL and store in a cool place. Make a new solution if bacterial growth becomes evident.

aj. Sulfuric Acid Solution, 0.5% – dilute 5.0 mL of concentrated sulfuric acid, Reagent Grade, in 500 mL distilled water. Adjust to final volume of 1000 in a volumetric flask with distilled water.

ak. Sulfuric Acid Solution (50% by Volume).

WARNING

This solution should only be made when the receiving flask or beaker can be placed in a lead-lined or other acid-proof sink. Avoid eye and skin contact with acid and inhalation of acid vapors. Mixing of acids should be conducted in acid fume booths or in well-ventilated areas.

(1) Slowly pour a given volume of concentrated sulfuric acid, Reagent Grade into a equal volume of distilled water.

(2) Allow receiving vessel to cool and observe for signs of cracking before lifting out of sink.

al. Sulfate Test Solution A and Sulfate Test Solution B.

WARNING

This solution should only be made when the receiving container can be placed in a lead-lined or other acid-proof sink. Pour concentrated acid slowly into water with stirring. Allow vessel to cool and observe for signs of cracking before lifting out of sink. Avoid eye and skin contact with acid and inhalation of acid vapors. Mixing of acids should be conducted in acid fume booths or in well-ventilated work areas.

(1) Solution A – dilute 420 mL hydrochloric acid, concentrated, Reagent Grade, in distilled water to a final volume of 1000 mL.

(2) Solution B – dissolve 296 g $BaCl_2 \cdot 2H_2O$ in distilled water and dilute to final volume of 1000 mL.

am. Thorium Nitrate Solution, 0.1N – dissolve exactly 75.0 g thorium nitrate, $Th(NO_3)_4 \cdot 12H_2O$, in distilled water and dilute to a final volume of 1 liter.

29.152 PREPARATION OF INDICATOR SOLUTIONS.

a. Alizarin Indicator (Alizarin Yellow R) – dissolve 0.1 g sodium p-nitrobenzeneazo-salicylate in 100 mL distilled water. The pH range indication is yellow at 10.1 to violet at 12.1.

b. Alpha Naphtholbenzein Indicator – dissolve 10 g alpha naphtholbenzein in 100 mL anhydrous isopropyl alcohol. The solid alpha naphtholbenzein should contain less than 0.5% chlorine and be in the form of a chocolate-brown amorphous powder.

c. Bromcresol Green Indicator – dissolve 0.10 g bromcresol green in 100 mL ethyl alcohol.

d. Bromcresol Green-Methyl Red Indicator.

(1) Dissolve 0.1 g bromcresol green in 100 mL ethyl alcohol.

(2) Dissolve 0.1 methyl red sodium salt in 100 mL distilled water. Filter if necessary.

(3) Mix 5 parts of bromcresol green with 1 part methyl red.

e. Bromcresol Purple Indicator – dissolve 0.4 g of bromcresol purple in 50 mL ethyl alcohol.

f. Bromphenol Blue Indicator – dissolve 0.10 g bromphenol blue in 100 mL ethyl alcohol.

g. Bromthymol Blue Indicator – dissolve 0.10 g of bromthymol blue in 100 mL ethyl alcohol.

h. Diphenylamine Indicator – weigh out 1.0 g diphenylamine and dissolve in 100 mL sulfuric acid, Reagent Grade.

i. Diphenylbenzidine Indicator – weigh out 1.0 g diphenylbenzidine powder and dissolve in 100 mL of 85% syrupy phosphoric acid.

j. Eriochrome Black T Indicator.

(1) Prepare a dry mixture of 1.0 g Eriochrome Black T Indicator powder and 100 g dry sodium chloride, Reagent Grade. Stir until thoroughly mixed.

(2) Dissolve 0.1 g of the dry mixture in 100 mL distilled water.

k. Methyl Orange Indicator – dissolve 0.10 g of methyl orange (sodium p-dimethylaminoazo-benzene-sulfonate) in 100 mL hot distilled water. Cool and filter if necessary.

l. Methyl Purple Indicator – dissolve 0.10 g methyl purple in 100 mL hot distilled water. Cool and filter if necessary.

m. Methyl Red Indicator – dissolve 0.10 g methyl red sodium salt in 100 mL distilled water. Filter if necessary.

n. Murixide Indicator – weigh out 0.20 g murexide and mix well with 100 g dry sodium chloride

(NaCl), Reagent Grade. Keep as dry as possible until used.

o. Pan Indicator Solution – dissolve 0.1 g of 1-(2 Pyridylazo)-2-Napthol in 100 mL ethyl alcohol.

p. Orthophenanthroline-Ferrous Sulfate Indicator – dissolve 1.485 g phenanthroline monohydrate in 100 mL 0.025M ferrous sulfate solution and keep in a glass stoppered dropping bottle.

q. Phenolphthalein Indicator – dissolve 1.0 g phenol-phthalein in 100 mL ethyl alcohol.

r. Potassium Chromate Indicator – dissolve 50 g potassium chromate (K_2CrO_4), Reagent Grade, in a little distilled water. Add 5 drops 0.1 silver nitrate solution and let stand for about 12 hours. Remove the red precipitate by filtration and dilute filtrate to 1000 mL with distilled water.

s. Starch Indicator Solution, 2%.

(1) Make a paste of 2 g soluble starch in 30 mL cold distilled water and add slowly to 70 mL boiling distilled water.

(2) Continue boiling for 5 minutes and allow to cool. Add 0.05 g thymol or 0.05 g salicylic acid as a preservative. Store in a cool place and prepare a new solution whenever bacterial growth is present.

t. Starch Iodine Indicator, 1%.

(1) Make a paste of 1 g of soluble starch with a small amount of water, and add 80 mL boiling distilled water.

(2) Add 0.05 g thymol or 0.05 g salicylic acid as a preservative. Adjust final volume to 100 mL and mix thoroughly.

u. Sulfo-Orange Indicator Solution – purchase ready to use either La Motte Sulfo-Orange or Fisher Sulfo-Orange indicator.

v. Thymol Blue Indicator – dissolve 0.10 g thymol blue in 20 mL hot ethyl alcohol. Dilute to 100 mL cool ethyl alcohol.

w. Thymolphthalein Indicator – dissolve 0.10 g thymolphthalein sodium salt in 100 mL ethyl alcohol.

x. Titan Yellow Indicator – dissolve 0.50 g of titan yellow in 200 mL distilled water and 50 mL 15% sodium hydroxide solution. Dilute to final volume of 500 mL with distilled water. To prepare 15% sodium hydroxide solution, dissolve 15 g sodium hydroxide, Reagent Grade, in 100 mL distilled water.

y. Uranyl Acetate Indicator – dissolve 12.5 g uranium acetate in distilled water. Add 6 mL of glacial acetic acid: dilute to 250 mL with distilled water.

z. Xylenol Orange Indicator – dissolve 0.05 g xylenol orange in 100 mL distilled water.

aa. Zinc Chloride Solution, 0.0575 Molar – weigh exactly 7.837 g dry zinc chloride and dissolve in distilled water sufficient to make a final volume of 1 liter of solution.

APPENDIX A
CONVERSION EQUIVALENTS, FACTORS, AND TABLES

A.1 PURPOSE.

This appendix provides methods for converting measurements used in metal finishing.

A.2 GENERAL.

Table A-1 Provides Conversion Equivalents
Table A-2 Provides Conversion Factors
Table A-3 Provides Temperature Conversions
Table A-4 Provides Dimension Conversion (A/dm^2 to ASF)
Table A-5 Provides Dimension Conversion (dm^2 to in^2 or ft^2)
Table A-6 Provides Weight Conversion

Table A-1. Conversion Equivalents

Unit	Equivalent
British Thermal Unit (BTU)	0.293 watt-hour
Carat	3.08648 grains, 200 milligrams
Centimeter	0.3937 inch; 0.03281 foot; 0.01 meter
Cubic Centimeter	0.0610 cubic inch; 0.99997 milliliter; 0.01 liter; 0.0338 fluid ounce
Cubic Foot	7.481 gallons; 1728 cubic inches; 28.317 liters; 0.0338 fluid ounce
Cubic Inch	0.004329 gallon; 0.5541 fluid ounce; 16.3872 cubic centimeters
Decimeter	3.927 inches: 0.3281 feet; 10 centimeters; 0.1 meter
Foot	0.3048 meter; 30.48 centimeters; 3.048 decimeters
Gallon	231 cubic inches; 3.7853 liters; 3785.4 cubic centimeters; 128 fluid ounces
Gram	0.035274 avoirdupois ounce; 0.03215 troy ounce
Inch	2.54 centimeters; 0.0833 foot
Karat	1/24 part
Kilogram	2.2046 avoirdupois pounds; 1000 grams
Liter	0.03532 cubic foot; 1.05671 quarts; 33.8147 fluid ounces; 1000 cubic centimeters; 0.2642 gallon
Meter	3.2808 feet; 100 centimeters; 10 decimeters
Micron	3.937×10^{-5} inch; 0.001 millimeter
MIL	0.001 inch; 0.00254 centimeter; 25.4 microns
Milligram	0.001 gram
Milliliter	1 cubic centimeter; 0.001 liter
Millimeter	0.001 meter; 0.03937 inch; 1000 microns
Ounce (avoirdupois)	28.3495 grams; 0.911458 troy ounce; 0.0625 avoirdupois pound
Ounce (troy)	31.10348 grams; 1.09714 (AV) ounces; 0.833 troy pounds
Pint	16 fluid ounces; 473.167 milliliters; 28.875 cubic inches; 0.4732 liter
Pound (avoirdupois)	453.592 grams; 16 ounces; 1.2153 troy pounds
Pound (troy)	373.24 grams; 12 troy ounces; 0.82286 (AV) pounds
Square Centimeter	0.155 square inch; 0.01 square decimeter
Square Decimeter	15.50 square inches; 0.1076 square foot; 100 square centimeters

Table A-1. Conversion Equivalents - Continued

Unit	Equivalent
Square Foot	929.0341 square centimeters; 144 square inches; 9.29 square decimeters
Square Inch	6.4516 square centimeters; 0.00694 square foot

Table A-2. Conversion Factors

To Convert	Multiply By	To Obtain
Amperes/sq cm	6.452	Amperes/sq in.
Amperes/sq dm	0.06452	Amperes/sq in.
Amperes/sq dm	9.29	Amperes/sq ft
Amperes/sq in.	0.155	Amperes/sq cm
Amperes/sq in.	15.50	Amperes/sq dm
Amperes/sq ft	0.006944	Amperes/sq in.
Amperes/sq in.	144	Amperes/sq ft
Ampere hours	0.03731	Faradays
Avoirdupois oz/gal	7.489	grams/1
Celsius (degrees)	9/5C + 32	Fahrenheit
Celsius (degrees)	C + 273.18	Kelvin (degrees)
Centimeters	0.03281	Feet
Centimeters	0.3937	Inches
Centimeters	0.01	Meters
Coulombs	1.036×10^{-5}	Faradays
Cubic centimeters	3.531×10^{-5}	Cubic ft
Cubic centimeters	0.06102	Cubic in.
Cubic centimeters	2.642×10^{-4}	Gallons (U.S.)
Cubic centimeters	0.001	Liters
Cubic meters	35.31	Cubic ft
Decimeter	0.1	Meters
Faraday	26.8	Ampere – hours
Faraday	9.65×10^{-4}	Coulombs
Feet	30.48	Centimeters
Feet	304.8	Millimeters
Feet (of water)	62.43	Pounds/sq ft
Grams	0.03527	Ounces (Avoirdupois)
Grams	0.03215	Ounces (troy)
Grams/liter	0.134	(AV) ounces/gal
Grams/liter	0.122	(TR) ounces/gal
Inches	2.54	Centimeters
Inches	0.254	Decimeters
Inches	25.4	Millimeters
Kilograms	1000	Grams
Kilograms	2.205	Pounds

Table A-2. Conversion Factors - Continued

To Convert	Multiply By	To Obtain
Liters	1000	Cubic centimeters
Liters	0.03531	Cubic feet
Liters	61.02	Cubic inches
Liters	0.2642	Gallons (U.S.)
Meters	100	Centimeters
Meters	10	Decimeters
Meters	3.281	Feet
Meters	39.37	Inches
Milliliters	0.001	Liters
Mils	0.001	Inches
Ounces	28.349	Grams
Ounces	0.0625	Pounds
Ounces (U.S. fluid)	1.805	Cubic inches
Ounces (U.S. fluid)	29.57	Cubic centimeters
Ounces (U.S. fluid)	0.02957	Liters
Ounces (U.S.fluid)/U.S. gal	7.813	Milliliters/liter
(AV) Ounces/gal	7.489	gram/liter
(TR) Ounces/gal	8.2	grams/liter
Ounces/sq in.	0.0625	Pounds/sq in.
Parts Per Million (PPM)	1.336×10^{-4}	(AV) Ounces/gal
Pints	473.2	Cubic centimeters
Pints	0.4732	Liters
Pints/gal	125	Milliliters/liter
Pounds (AV)	14.583	Ounces (TR)
Pounds (AV)	453.59	Grams
Pounds (AV)	16	Ounces
Quarts	946.3	Cubic centimeters
Quarts	0.9463	Liters
Square centimeters	0.0011	Square feet
Square centimeters	0.155	Square inches
Square decimeters	9.29	Square feet
Square decimeters	15.5	Square inches
Square feet	929	Square centimeters
Square feet	0.108	Square decimeter
Square feet	144	Square inches
Square meters	10.76	Square feet
Square meters	1550	Square inches
Temperature °C +17.78	1.8	Fahrenheit (degrees)
Temperature °F –32	5/9	Celsius (degrees)

Table A-3. Conversion Tables Celsius to Fahrenheit or Fahrenheit to Celsius

°C		°F
–17.8	0	32.0
–16.7	2	35.6
–15.6	4	39.2
–14.4	6	42.8
–13.3	8	46.4
–12.2	10	50.0
–11.1	12	53.6
–10.0	14	57.2
–8.9	16	60.8
–7.8	18	64.4
–6.7	20	68.0
–5.6	22	71.6
–4.4	24	75.2
–3.3	26	78.8
–2.2	28	82.4
–1.1	30	86.0
0.0	32	89.6
1.1	34	93.2
2.2	36	96.8
3.3	38	100.4
4.4	40	104.0
5.6	42	107.6
6.7	44	111.2
7.8	46	114.8
8.9	48	118.4
10.0	50	122.0
11.1	52	125.6
12.2	54	129.2
13.3	56	132.8
14.4	58	136.4
15.6	60	140.0
16.7	62	143.6
17.8	64	147.2
18.9	66	150.8
20.0	68	154.4
21.1	70	158.0
22.2	72	161.6
23.2	74	165.2
24.4	76	168.8
25.6	78	172.4

Table A-3. Conversion Tables Celsius to Fahrenheit or Fahrenheit to Celsius - Continued

°C		°F
26.7	80	176.0
27.8	82	179.6
28.9	84	183.2
30.0	86	186.8
31.1	88	190.4
32.2	90	194.0
33.3	92	197.6
34.4	94	201.2
35.6	96	204.8
36.7	98	208.4
37.8	100	212.0
38.9	102	215.6
40.0	104	219.2
41.1	106	222.8
42.2	108	226.4
43.3	110	230.0
44.4	112	233.6
45.6	114	237.2
46.7	116	240.8
47.8	118	244.4
48.9	120	248.0
50.0	122	251.6
51.1	124	255.2
52.2	126	258.8
53.3	128	262.4
54.4	130	266.0
55.6	132	269.6
56.7	134	273.2
57.8	136	276.8
58.9	138	280.4
60.0	140	284.0
61.1	142	287.6
62.2	144	291.2
63.3	146	294.8
64.4	148	298.4
65.6	150	302.0
66.7	152	305.6
67.8	154	309.2
68.9	156	312.8
70.0	158	316.4
71.1	160	320.0

Table A-3. Conversion Tables Celsius to Fahrenheit or Fahrenheit to Celsius - Continued

°C		°F
72.2	162	323.6
73.3	164	327.2
74.4	166	330.8
75.6	168	334.4
76.7	170	338.0
77.8	172	341.6
78.9	174	345.2
80.0	176	348.8
81.1	178	352.4
82.2	180	356.0
83.3	182	359.6
84.4	184	363.2
85.6	186	366.8
86.7	188	370.4
87.8	190	374.0
88.9	192	377.6
90.0	194	381.2
91.1	196	384.8
92.2	198	388.4
93.3	200	392.0
94.4	202	395.6
95.6	204	399.2
96.7	206	402.8
97.8	208	406.4
98.9	210	410.0
100.0	212	413.6

Table A-4. Amperes Per Square Decimeter to Amperes Per Square Foot or Amperes Per Square Foot to Amperes Per Square Decimeter

Amperes Per Square Decimeter A/dm^2		Amperes Per Square Foot A/FT^2
0.108	1	9.29
0.216	2	18.58
0.324	3	27.87
0.432	4	37.16
0.54	5	46.45
0.648	6	55.74
0.756	7	65.03
0.864	8	74.32
0.972	9	83.61
1.08	10	92.9

Table A-4. Amperes Per Square Decimeter to Amperes Per Square Foot or Amperes Per Square Foot to Amperes Per Square Decimeter - Continued

Amperes Per Square Decimeter A/dm^2		Amperes Per Square Foot A/FT^2
1.188	11	102.19
1.296	12	111.48
1.404	13	120.77
1.512	14	130.06
1.62	15	139.35
1.728	16	148.64
1.836	17	157.93
1.944	18	167.22
2.052	19	176.51
2.16	20	185.8
2.268	21	195.09
2.376	22	204.38
2.484	23	213.67
2.592	24	222.96
2.7	25	232.25
2.808	26	241.54
2.916	27	250.83
3.024	28	260.12
3.132	29	269.41
3.24	30	278.7
3.348	31	287.99
3.456	32	297.28
3.564	33	306.57
3.672	34	315.86
3.78	35	325.15
3.888	36	334.44
3.996	37	343.73
4.104	38	353.02
4.212	39	362.31
4.32	40	371.6
4.428	41	380.89
4.536	42	390.18
4.644	43	399.47
4.752	44	408.76
4.86	45	418.05
4.968	46	427.34
5.076	47	436.63
5.184	48	445.92
5.292	49	455.21
5.4	50	464.5

Table A-4. Amperes Per Square Decimeter to Amperes Per Square Foot or Amperes Per Square Foot to Amperes Per Square Decimeter - Continued

Amperes Per Square Decimeter A/dm^2		Amperes Per Square Foot A/FT^2
5.508	51	473.79
5.616	52	483.08
5.724	53	492.37
5.832	54	501.66
5.94	55	510.95
6.048	56	520.24
6.156	57	529.53
6.264	58	538.82
6.372	59	548.11
6.48	60	557.4
6.588	61	566.96
6.696	62	575.98
6.804	63	585.27
6.912	64	594.56
7.02	65	603.85
7.128	66	613.14
7.236	67	622.43
7.344	68	631.72
7.452	69	641.01
7.56	70	650.3
7.668	71	659.59
7.776	72	668.88
7.884	73	678.17
7.992	74	687.46
8.1	75	696.75
8.208	76	706.04
8.316	77	715.33
8.424	78	724.62
8.532	79	733.91
8.64	80	743.2
8.748	81	752.49
8.856	82	761.78
8.964	83	771.07
9.072	84	780.36
9.18	85	789.65
9.288	86	798.94
9.396	87	808.23
9.504	88	817.52
9.612	89	826.81
9.72	90	836.1

Table A-4. Amperes Per Square Decimeter to Amperes Per Square Foot or Amperes Per Square Foot to Amperes Per Square Decimeter - Continued

Amperes Per Square Decimeter A/dm^2		Amperes Per Square Foot A/FT^2
9.828	91	845.39
9.936	92	854.68
10.044	93	863.97
10.152	94	873.26
10.26	95	882.55
10.368	96	891.84
10.476	97	901.13
10.584	98	910.42
10.692	99	919.71
10.8	100	929

Table A-5. Square Decimeters to Square Inches and Square Feet and Square Inches to Square Decimeters

Square Decimeters		Square Inches	Square Feet
0.13	2	31.00	0.22
0.26	4	62.00	0.43
0.39	6	93.00	0.65
0.52	8	124.00	0.86
0.65	10	155.00	1.08
0.77	12	186.00	1.29
0.90	14	217.00	1.51
1.03	16	248.00	1.72
1.16	18	279.00	1.94
1.29	20	310.00	2.15
1.42	22	341.00	2.37
1.55	24	372.00	2.58
1.68	26	403.00	2.80
1.81	28	434.00	3.01
1.94	30	465.00	3.23
2.06	32	496.00	3.44
2.19	34	527.00	3.66
2.32	36	558.00	3.87
2.45	38	589.00	4.09
2.58	40	620.00	4.30
2.71	42	651.00	4.52
2.84	44	682.00	4.73
2.97	46	713.00	4.95
3.10	48	744.00	5.16
3.23	50	775.00	5.38
3.35	52	806.00	5.60

Table A-5. Square Decimeters to Square Inches and Square Feet and Square Inches to Square Decimeters - Continued

Square Decimeters		Square Inches	Square Feet
3.48	54	837.00	5.81
3.61	56	868.00	6.03
3.74	58	899.00	6.24
3.87	60	930.00	6.46
4.00	62	961.00	6.67
4.13	64	992.00	6.89
4.26	66	1023.00	7.10
4.39	68	1054.00	7.32
4.52	70	1085.00	7.53
4.65	72	1116.00	7.75
4.77	74	1147.00	7.96
4.90	76	1178.00	8.18
5.03	78	1209.00	8.39
5.16	80	1240.00	8.61
5.29	82	1271.00	8.82
5.42	84	1302.00	9.04
5.55	86	1333.00	9.25
5.68	88	1364.00	9.47
5.81	90	1395.00	9.68
5.94	92	1426.00	9.90
6.06	94	1457.00	10.11
6.19	96	1488.00	10.33
6.32	98	1519.00	10.54
6.45	100	1550.00	10.76
6.58	102	1581.00	10.98
6.71	104	1612.00	11.19
6.84	106	1643.00	11.41
6.97	108	1674.00	11.62
7.10	110	1705.00	11.84
7.23	112	1736.00	12.05
7.35	114	1767.00	12.27
7.48	116	1798.00	12.48
7.61	118	1829.00	12.70
7.74	120	1860.00	12.91
7.87	122	1891.00	13.13
8.00	124	1922.00	13.34
8.13	126	1953.00	13.56
8.26	128	1984.00	13.77
8.39	130	2015.00	13.99
8.52	132	2046.00	14.20

Table A-5. Square Decimeters to Square Inches and Square Feet and Square Inches to Square Decimeters - Continued

Square Decimeters		Square Inches	Square Feet
8.65	134	2077.00	14.42
8.77	136	2108.00	14.63
8.90	138	2139.00	14.85
9.03	140	2170.00	15.06
9.16	142	2201.00	15.28
9.29	144	2232.00	15.49
9.42	146	2263.00	15.71
9.55	148	2294.99	15.92
9.68	150	2325.00	16.14
9.81	152	2356.00	16.36
9.94	154	2387.00	16.57
10.06	156	2418.00	16.79
10.19	158	2449.00	17.00
10.32	160	2480.00	17.22
10.45	162	2511.00	17.43
10.58	164	2542.00	17.65
10.71	166	2573.00	17.86
10.84	168	2604.00	18.08
10.97	170	2635.00	18.29
11.10	172	2666.00	18.51
11.23	174	2697.00	18.72
11.35	176	2728.00	18.94
11.48	178	2759.00	19.15
11.61	180	2790.00	19.37
11.74	182	2821.00	19.58
11.87	184	2852.00	19.80
12.00	186	2883.00	20.01
12.13	188	2914.00	20.23
12.26	190	2945.00	20.44
12.39	192	2976.00	20.66
12.52	194	3007.00	20.87
12.65	196	3038.00	21.09
12.77	198	3069.00	21.30
12.90	200	3100.00	21.52
13.03	202	3131.00	21.74
13.16	204	3162.00	21.95
13.29	206	3193.00	22.17
13.42	208	3224.00	22.38
13.55	210	3255.00	22.60
13.68	212	3286.00	22.81

Table A-5. Square Decimeters to Square Inches and Square Feet and Square Inches to Square Decimeters - Continued

Square Decimeters		Square Inches	Square Feet
13.81	214	3317.00	23.03
13.94	216	3348.00	23.24
14.06	218	3379.00	23.46
14.19	220	3410.00	23.67
14.32	222	3441.00	23.89
14.45	224	3472.00	24.10
14.58	226	3503.00	24.32
14.71	228	3534.00	24.53
14.84	230	3565.00	24.75
14.97	232	3596.00	24.96
15.10	234	3627.00	25.18
15.23	236	3658.00	25.39
15.35	238	3680.00	25.61
15.48	240	3720.00	25.82
15.61	242	3751.00	26.04

Table A-6. Grams Per Liter to Ounces (AV) Per Gallon and Ounces Per Gallon to Grams Per Liter

Grams Per Liter		Ounces (AV) Per Gallon
7.52	1	0.13
9.02	1.2	0.16
10.53	1.4	0.19
12.03	1.6	0.21
13.53	1.8	0.24
15.04	2	0.27
16.54	2.2	0.29
18.05	2.4	0.32
19.55	2.6	0.35
21.05	2.8	0.37
22.56	3	0.40
24.06	3.2	0.43
25.56	3.4	0.45
27.07	3.6	0.48
28.57	3.8	0.51
30.08	4	0.53
31.58	4.2	0.56
33.08	4.4	0.59
34.59	4.6	0.61
36.09	4.8	0.64
37.60	5	0.67

Table A-6. Grams Per Liter to Ounces (AV) Per Gallon and Ounces Per Gallon to Grams Per Liter - Continued

Grams Per Liter		Ounces (AV) Per Gallon
39.10	5.2	0.69
40.60	5.4	0.72
42.11	5.6	0.74
43.61	5.8	0.77
45.11	6	0.80
46.62	6.2	0.82
48.12	6.4	0.85
49.63	6.6	0.88
51.13	6.8	0.90
52.63	7	0.93
54.14	7.2	0.96
55.64	7.4	0.98
57.14	7.6	1.01
58.65	7.8	1.04
60.15	8	1.06
61.66	8.2	1.09
63.16	8.4	1.12
64.66	8.6	1.14
66.17	8.8	1.17
67.67	9	1.20
69.17	9.2	1.22
70.68	9.4	1.25
72.18	9.6	1.28
73.69	9.8	1.30
75.19	10	1.33
76.69	10.2	1.36
78.20	10.4	1.38
79.70	10.6	1.41
81.21	10.8	1.44
82.71	11	1.46
84.21	11.2	1.49
85.72	11.4	1.52
87.22	11.6	1.54
88.72	11.8	1.57
90.23	12	1.60
91.73	12.2	1.62
93.24	12.4	1.65
94.74	12.6	1.68
96.24	12.8	1.70
97.75	13	1.73
99.25	13.2	1.76

Table A-6. Grams Per Liter to Ounces (AV) Per Gallon and Ounces Per Gallon to Grams Per Liter - Continued

Grams Per Liter		Ounces (AV) Per Gallon
100.75	13.4	1.78
102.26	13.6	1.81
103.76	13.8	1.84
105.27	14	1.86
106.77	14.2	1.89
108.27	14.4	1.92
109.78	14.6	1.94
111.28	14.8	1.97
112.79	15	2.00
114.29	15.2	2.02
115.79	15.4	2.05
117.30	15.6	2.07
118.80	15.8	2.10
120.30	16	2.13
121.81	16.2	2.15
123.31	16.4	2.18
124.82	16.6	2.21
126.32	16.8	2.23
127.82	17	2.26
129.33	17.2	2.29
130.83	17.4	2.31
132.33	17.6	2.34
133.84	17.8	2.37
135.34	18	2.39
136.85	18.2	2.42
138.35	18.4	2.45
139.85	18.6	2.47
141.36	18.8	2.50
142.86	19	2.53
144.36	19.2	2.55
145.87	19.4	2.58
147.37	19.6	2.61
148.88	19.8	2.63
150.38	20	2.66
151.88	20.2	2.69
153.39	20.4	2.71
154.89	20.6	2.74
156.40	20.8	2.77
157.90	21	2.79
159.40	21.2	2.82
160.91	21.4	2.85

Table A-6. Grams Per Liter to Ounces (AV) Per Gallon and Ounces Per Gallon to Grams Per Liter - Continued

Grams Per Liter		Ounces (AV) Per Gallon
162.41	21.6	2.87
163.91	21.8	2.90
165.42	22	2.93
166.92	22.2	2.95
168.43	22.4	2.98
169.93	22.6	3.01
171.43	22.8	3.03
172.94	23	3.06
174.44	23.2	3.09
175.94	23.4	3.11
177.45	23.6	3.14
178.95	23.8	3.17
180.46	24	3.19
181.96	24.2	3.22
183.46	24.4	3.25
184.97	24.6	3.27
186.47	24.8	3.30
187.98	25	3.33
189.48	25.2	3.35
190.98	25.4	3.38
192.49	25.6	3.40
193.99	25.8	3.43
195.49	26	3.46
197.00	26.2	3.48
198.50	26.4	3.51
200.01	26.6	3.54
201.51	26.8	3.56
203.01	27	3.59
204.52	27.2	3.62
206.02	27.4	3.64
207.52	27.6	3.67
209.03	27.8	3.70
210.53	28	3.72
212.04	28.2	3.75
213.54	28.4	3.78
215.04	28.6	3.80
216.55	28.8	3.83
218.05	29	3.86
219.55	29.2	3.88
221.06	29.4	3.91
222.56	29.6	3.94

Table A-6. Grams Per Liter to Ounces (AV) Per Gallon and Ounces Per Gallon to Grams Per Liter - Continued

Grams Per Liter		Ounces (AV) Per Gallon
224.07	29.8	3.96
225.57	30	3.99
227.07	30.2	4.02
228.58	30.4	4.04
230.08	30.6	4.07
231.59	30.8	4.10
233.09	31	4.12
234.59	31.2	4.15
236.10	31.4	4.18
237.60	31.6	4.20
239.10	31.8	4.23
240.61	32	4.26

APPENDIX B
REFERENCE

B.1 PURPOSE.

This appendix provides a list of reference documents for use in performing the procedures described in this manual.

B.2 GENERAL.

Table B-1	Lists	Specifications Used by Military
Table B-2	Lists	Specifications Used by Federal Government
Table B-3	Lists	Standards Used by Military
Table B-4	Lists	Standards Used by Federal Government
Table B-5	Lists	Military Handbooks
Table B-6	Lists	Air Force Publications
Table B-7	Lists	Technical Orders
Table B-8	Lists	Commercial Specifications

Table B-1. Specifications Used by Military

Number	Title
MIL-F-495	Finish, Chemical, Black, for Copper Alloys
MIL-PRF-680	Degreasing Solvent
MIL-S-5002	Surface Treatments and Inorganic Coatings for Metal Surfaces of Weapon Systems
MIL-C-5541	Chemical Conversion Coatings for Aluminum and Aluminum Alloys
MIL-A-8625	Anodic Coatings for Aluminum and Aluminum Alloys
MIL-M-10578	Metal Conditioner and Rust Remover (Phosphoric Acid Base)
MIL-L-13808	Lead Plating (Electrodeposited)
MIL-DTL-13924	Coating, Oxide, Black, for Ferrous Metals
MIL-F-14072	Finish for Ground Signal Equipment
MIL-DTL-14538	Chromium Plating, Black (Electrodeposited)
MIL-PRF-16173	Corrosion Preventive Compound, Solvent Cutback, Cold-Application
MIL-DTL-16232	Phosphate Coating, Heavy, Manganese or Zinc Base
MIL-C-17711	Coatings, Chromate, for Zinc Alloy Castings and Hot Dip Galvanized Surfaces
MIL-P-18317	Plating, Black Nickel Electrodeposited on Brass, Bronze or Steel
MIL-P-19419	Plating, Chromium, Electrodeposited (On the Interior Surfaces of 20 mm Mark II Gun Barrels)
MIL-C-20218	Chromium Plating, Electrodeposited, Porous
MIL-P-23242	Plastic Coating Compound, Strippable – Electroplating
MIL-L-23398	Lubricant, Solid Film, Air-Cured, Corrosion-Inhibiting, NATO Code Number S-749
MIL-P-23408	Tin-Cadmium Plating, Electrodeposited
MIL-D-26847	Degreaser, Vapor Type
MIL-PRF-32033	Lubricating Oil, General Purpose, Preservative (Water-Displacing, Low Temperature)
MIL-PRF-46010	Lubricant, Solid Film, Heat-Cured, Corrosion-Inhibiting
MIL-R-46085	Rhodium Plating, Electrodeposited
MIL-C-46110	Coating Compound, Oxide Black
MIL-S-46172	Steel Forgings
MIL-A-50460	Ammonium Nitrate, Prilled (for Use in Ammunition)

Table B-1. Specifications Used by Military - Continued

Number	Title
A-A-51126	Anodes, Cadmium
A-A-51142	Anodes, Nickel, Carbonized
A-A-51144	Anodes, Copper
MIL-L-53074	Lubricating Oil, Steam-Cylinder, Mineral
A-A-55820	Orthophosphoric (Phosphoric) Acid, Technical
A-A-55827	Chromium Trioxide, Technical
A-A-55828	Sulfuric Acid, Technical
A-A-55829	Acetic Acid, Glacial, Technical
A-A-59105	Nitric Acid, Technical
A-A-59123	Sodium Dichromate Dihydrate, Technical
A-A-59133	Cleaning Compound, High-Pressure (Steam) Cleaner
A-A-59146	Cleaning Compound, Alkali, Boiling Vat (Soak) or Hydrosteam
A-A-59260	Corrosion Removing Compound, Sodium Hydroxide Base; for Electrolytic or Immersion Application
A-A-59267	Phosphate Coating Compounds, Manganese or Zinc Base (for Ferrous Metals)
A-A-59282	Chemicals, Analytical; General Specification for
A-A-59316	Abrasive Materials; for Blasting
A-A-59476	Ammonium Nitrate, Technical
A-A-59601	Dry Cleaning and Degreasing Solvent, PD680
MIL-PRF-81329	Lubricant, Solid Film, Extreme Environment, NATO Code Number S-1737
MIL-DTL-81706	Chemical Conversion Materials for Coating Aluminum and Aluminum Alloys
MIL-C-82594	Corrosion Preventive Compound and Surface Sealer for Nonferrous Metals

Table B-2. Specifications Used by Federal Government

Number	Title
O-S-571	Sodium Carbonate, Anhydrous, Technical
O-S-634	Sodium Nitrate, Technical (Nitrate of Soda)
O-S-642	Sodium Phosphate, Tribasic, Anhydrous, Dodecahydrate; and Monohydrate; Technical
O-H-795	Hydrofluoric Acid, Technical

Table B-3. Standards Used by Military

Number	Title
MIL-STD-202	Electronic and Electrical Component Parts
MIL-STD-865	Selective (Brush Plating), Electrodeposition
MIL-STD-866	Grinding of Chrome Plated Steel Parts Heat Treated to 180,000 psi or over
MIL-STD-868	Nickel Plating, Low Embrittlement, Electrodeposition
MIL-STD-870	Cadmium Plating, Low Embrittlement, Electrodeposition
MIL-STD-871	Electro-Chemical Stripping of Inorganic Finishes
MIL-STD-889	Dissimilar Metals
MIL-STD-1500	Cadmium-Titanium Plating, Low Embrittlement, Electrodeposition
MIL-STD-1501	Chromium Plating, Low Embrittlement, Electrodeposition
MIL-STD-1503	Preparation of Aluminum Alloys for Electroplating
MIL-STD-7179	Finishes, Coatings, and Sealants, for the Protection of Aerospace Weapons Systems

Table B-4. Standards Used by Federal Government

Number	Title
FED-STD-791	Lubricants, Liquid Fuels, and Related Products; Methods of Testing

Table B-5. Military Handbooks

Number	Title
MIL-HDBK-132	Protective Finishes for Metal and Wood Surfaces
MIL-HDBK-729	Corrosion and Corrosion Prevention-Metals

Table B-6. Air Force Publications

Number	Title
AFI 48-116	Food Safety Program
AFI 91-301	Air Force Occupational and Environmental Safety, Fire Protection, and Health (AFOSH) Program
AFOSHSTD 91-66	General Industrial Operations
AFOSHSTD 91-501	Air Force Consolidated Occupational Safety Standards
AFOSH 161-2	Industrial Ventilation

Table B-7. Technical Orders

Number	Title
T.O. 1-1-691	Aircraft Weapons System Cleaning and Corrosion Control
T.O. 2-1-111	Standard Maintenance Procedures — Navy and USAF P&W (Pratt & Whitney) Engines
T.O. 33B-1-1	Nondestructive Inspection Methods
T.O. 42C-1-12	Quality Control of Chemicals

Table B-8. Commercial Specifications

Number	Title
AIA/NAS NASM1312	Fastener Test Methods
ASTM E8	Standard Test Methods for Tension Testing of Metallic Materials
ASTM B117	Standard Practice for Operating Salt Spray (Fog) Apparatus
ASTM B137	Standard Test Method for Measurement of Coating Mass Per Unit Area on Anodically Coated Aluminum
ASTM B244	Standard Test Method for Measurement of Thickness of Anodic Coatings on Aluminum and of Other Nonconductive Coatings on Nonmagnetic Basis Metals with Eddy-Current Instruments
ASTM B339	Standard Specification for Pig Tin
ASTM B376	Standard Practice for Measuring Coating Thickness by Magnetic-Field or Eddy-Current (Electromagnetic) Examination Methods
ASTM B487	Standard Test Method for Measurement of Metal and Oxide Coating Thickness by Microscopical Examination of a Cross-Section
ASTM B499	Standard Test Method for Measurement of Coating Thicknesses by the Magnetic Method: Nonmagnetic Coatings on Magnetic Basis Metals
ASTM B504	Standard Test Method for Measurement of Thickness of Metallic Coatings by the Coulometric Method
ASTM B545	Standard Specification for Electrodeposited Coatings of Tin
ASTM B567	Standard Test Method for Measurement of Coating Thickness by the Beta Backscatter Method
ASTM B568	Standard Test Method for Measurement of Coating Thickness by X-ray Spectrometry
ASTM B578	Standard Test Method for Microhardness of Electroplated Coatings
ASTM A623	Standard Specification for Tin Mill Products, General Requirements
ASTM A623M	Standard Specification for Tin Mill Products, General Requirements [Metric]
ASTM A624/A624M	Standard Specification for Tin Mill Products, Electrolytic Tin Plate, Single Reduced
ASTM A626/A626M	Standard Specification for Tin Mill Products, Electrolytic Tin Plate, Double Reduced
ASTM A630	Standard Test Methods for Determination of Tin Coating Weights for Electrolytic Tin Plate
ASTM B633	Standard Specification for Electrodeposited Coatings of Zinc on Iron and Steel
ASTM B679	Standard Specification for Electrodeposited Coatings of Palladium for Engineering Use
ASTM B700	Standard Specification for Electrodeposited Coatings of Silver for Engineering Use
ASTM E1146	Standard Specification for Muriatic Acid (Technical Grade Hydrochloric Acid)
ASTM D1193	Standard Specification for Reagent Water
ASTM D1732	Standard Practices for Preparation of Magnesium Alloy Surfaces for Painting
ASTM D2092	Standard Guide for Preparation of Zinc-Coated (Galvanized) Steel Surfaces for Painting
ASTM D4080	Standard Specification for Trichloroethylene, Technical and Vapor-Degreasing Grade
ASTM D4081	Standard Specification for Dry Cleaning-Grade Perchloroethylene
ASTM D4376	Standard Specification for Vapor-Degreasing Grade Perchloroethylene
J-STD-004	Requirements for Soldering Fluxes
J-STD-005	Requirements for Soldering Pastes
J-STD-006	Requirements for Electronic Grade Solder Alloys and Fluxed and Non-Fluxed Solid Solders for Electronic Soldering Applications
SAE AMS-QQ-P-35	Passivation Treatments for Corrosion-Resistant Steel

Table B-8. Commercial Specifications - Continued

Number	Title
SAE AMS-QQ-N-290	Nickel Plating (Electrodeposited)
SAE AMS-QQ-C-320	Chromium Plating (Electrodeposited)
SAE AMS-QQ-P-416	Plating, Cadmium (Electrodeposited)
SAE AMS-STD-753	Steel Parts, Corrosion-Resistant: Sampling, Inspection and Testing for Surface Passivation
SAE AMS 1547	Steel, Tank Type, Cleaner, Anodic, Electrolytic, Alkaline for
SAE AMS 2418	Plating, Copper
SAE AMS 2422	Plating, Gold
SAE AMS 2431	Peening Media General Requirements
SAE AMS-M-3171	Magnesium Alloy, Processes for Pretreatment and Prevention of Corrosion on
SAE AMS-S-5000	Steel, Chrome-Nickel-Molybdenum (E4340) Bars and Reforging Stock
SAE AMS-H-6875	Heat Treatment of Steel Raw Materials
SAE AMS-C-8837	Coating, Cadmium (Vacuum Deposited)
SAE AMS-S-13165	Shot Peening of Metal Parts
SAE AMS-C-26074	Coatings, Electroless Nickel, Requirements for
SAE AMS-C-81562	Coatings, Cadmium, Tin-Cadmium and Zinc (Mechanically Deposited)

APPENDIX C
MATERIALS

C.1 PURPOSE.

This appendix provides a list of materials used in the various chemical solutions throughout this manual. See Table C-1.

C.2 CLASSIFICATION OF CHEMICALS.

(Listed in descending order by purity.)

C.2.1 Primary Standard. A material purified to an assay of the order of 99.9 – 100% for use as a reference standard in quantitative analysis.

C.2.2 Reagent. A highly purified chemical suitable for quantitative analytical applications and usually having the manufacturer's control analysis shown on the label.

C.2.3 ACS. Reagents meeting the requirements of the American Chemical Society.

C.2.4 CP. Compounds rated CHEMICALLY PURE, a designation some manufacturers use for their best grade.

C.2.5 Laboratory Grade. Chemicals conforming to purity standards of the United States Pharmacopoeia and the National Formulary.

C.2.6 Pure, Purified, or Practical. Chemicals of good purity produced by refining commercially available products.

C.2.7 Technical. Chemicals of purity adequate for commercial use.

Table C-1. Materials

Federal Stock Number	Nomenclature	Grade	Unit	Size
6810-00-222-2634	Acetic Acid	ACS	QT	16 oz
6810-00-221-1415	Acetic Acid	ACS	BT	5 lb
6810-00-526-2023	Acetic Acid	Technical	DR	55 gal
6810-00-264-8955	Acetone	ACS	BT	1 gal
6810-00-527-9530	Acetone	Technical	BT	16 oz
5350-00-230-3251	Aluminum Oxide, 120 Grit		BG	50 lb
5350-00-261-9065	Aluminum Oxide, 150 Grit		BG	50 lb
5350-00-903-6041	Aluminum Oxide, 180 Grit		BG	50 lb
5350-00-881-4444	Aluminum Oxide, 220 Grit		DR	100 lb
6810-00-243-4436	Ammonium Hydroxide	ACS	BT	4 lb
6810-01-091-8676	Ammonium Nitrate		BG	50 lb
6810-01-017-3413	Ammonium Sulfate	Technical	BG	
3426-00-276-9950	Anode, Plating (Copper)		EA	
3426-00-088-9069	Anode, Plating (Nickel)		EA	
3426-00-088-9070	Anode, Plating (Nickel)		EA	
6810-01-446-4910	Antimony Trioxide		BT	10 g
6810-00-065-3140	Barium Chloride, Anhydrous	ACS	BT	5 lb
6810-00-153-0191	Boric Acid	ACS	BX	25 lb
6630-01-069-1704	Buffer Solution, Standard, pH 4		BT	500 mL
6810-00-372-3472	Buffer Solution, Standard, pH 10		BT	1 qt
3426-00-262-3845	Cadmium Anodes (Sphere)	QQ-A-671	EA	
6810-00-281-8804	Cadmium Oxide	Technical	CN	50 lb
6810-00-490-3998	Calcium Fluoride	ACS	BT	500 g
6810-00-242-4770	Calcium Hypochlorite	Technical	BX	3.75 lb
6810-00-255-0472	Calcium Hypochlorite	Technical	DR	100 lb
6810-00-242-4066	Calcium Sulfate, Anhydrous	Technical	CN	1 lb
6810-00-264-3939	Chromium Trioxide	Technical	DR	50 lb
6810-00-281-2049	Charcoal, Activated Granular	Technical	DR	100 lb
6810-00-264-6575	Charcoal, Activated Powder	Technical	DR	50 lb
6810-00-569-6605	Cupric Sulfate, Anhydrous	ACS	BT	1 lb
6810-01-228-3360	Cuprous Cyanide	Technical	DR	100 lb
6810-00-173-7219	Ethylene Diamine Tetra Acetic Acid	ACS	BT	500 g
6810-00-270-3252	Ferric Chloride, Anhydrous	ACS	BT	500 g
6810-00-275-8143	Ferrous Ammonium Sulfate, Hexahydrate	ACS	BT	500 g
6810-00-262-8573	Ferrous Sulfate, Heptahydrate	ACS	BT	500 g
6810-00-290-0034	Fluoboric Acid	Technical	BT	1 lb
6810-00-264-6604	Glycerol	ACS	BT	1 gal
6810-00-237-2955	Hydrochloric Acid	ACS	BT	80 oz
6810-00-823-8010	Hydrochloric Acid	Technical	DR	15 gal
6810-00-543-4012	Hydrofluoric Acid	Technical	BT	1 gal

Table C-1. Materials - Continued

Federal Stock Number	Nomenclature	Grade	Unit	Size
6810-00-233-1711	Hydrogen Peroxide	ACS	BT	16 oz
6750-00-664-8269	Hydroquinone, Photographic		BT	1 lb
6810-00-527-9666	Hydroxylamine Sulfate	ACS	BT	500 g
6810-00-264-6706	Indium Sulfate, Anhydrous	Technical	BT	1.875 lb
6810-00-663-2569	Lead Fluoborate Solution		BT	5 gal
6810-00-300-5111	Mannitol	ACS	BT	1 lb
6810-00-990-0572	Methanol	ACS	BT	1 gal
6810-00-973-6480	Molybdenum Trioxide	ACS	BT	1 lb
6810-00-016-1806	Nickel Carbonate	Technical	BG	50 lb
6810-00-726-9306	Nickel Chloride, Hexahydrate	Technical	BG	100 lb
6810-00-281-2684	Nickel Sulfate, Hexahydrate	Technical	DR	100 lb
6810-00-237-2954	Nitric Acid	ACS	BT	7 lb
6810-00-236-5670	Nitric Acid	Technical	DR	6½ gal
6810-00-823-8004	Orthophosphoric Acid	Technical	DR	15 gal
6810-00-264-6722	Orthophosphoric Acid	Technical	BT	7 lb
6810-00-264-3937	Oxalic Acid, Dihydrate	Technical	BT	1 lb
6810-00-227-0405	Potassium Carbonate	ACS	BT	500 g
6810-00-237-2910	Potassium Cyanide	ACS	CN	25 lb
6810-00-222-9658	Potassium Ferricyanide	ACS	BT	500 g
6810-00-023-9682	Potassium Fluoride, Dihydrate	ACS	BT	500 g
6810-00-234-8366	Potassium Hydroxide	ACS	BT	3 kg
6810-00-243-4433	Potassium Iodide	ACS	BT	500 g
6810-00-264-6620	Potassium Permanganate	Technical	DR	110 lb
6810-01-502-2319	Potassium Phosphate, Tribasic	ACS	BT	1 L
6810-00-264-3935	Potassium Sodium Tartrate, Tetrahydrate	ACS	BT	500 g
3426-00-640-3758	Silver Anode		EA	
6810-00-241-8426	Silver Cyanide	ACS Reagent	DR	100 oz
6810-00-233-0124	Silver Nitrate	ACS	BT	500 g
6810-00-270-3249	Sodium Acetate, Anhydrous	ACS	BT	500 g
6810-00-290-5574	Sodium Bicarbonate	Technical	BG	100 lb
6810-00-233-1715	Sodium Carbonate, Anhydrous	Technical	DR	100 lb
6810-00-240-2119	Sodium Chromate, Anhydrous	Technical	BT	1 lb
6810-00-242-6336	Sodium Cyanide	Technical	DR	200 lb
6810-00-281-2686	Sodium Dichromate, Dihydrate	Technical	DR	100 lb
6810-01-021-0145	Sodium Gluconate	Technical	BG	100 lb
6810-00-234-8373	Sodium Hydroxide	ACS	BT	2.5 kg
6810-00-043-1458	Sodium Hydroxide	Technical	BT	5 lb
6810-00-043-1459	Sodium Hydroxide	Technical	BT	1 lb
6810-00-174-6581	Sodium Hydroxide	Technical	DR	100 lb
6810-00-264-9025	Sodium Hydroxide	Technical	DR	400 lb
6810-00-270-8177	Sodium Hydroxide	Technical		500 g

Table C-1. Materials - Continued

Federal Stock Number	Nomenclature	Grade	Unit	Size
6810-00-034-6708	Sodium Hypophosphite	Technical	DR	50 kg
6810-00-664-7062	Sodium Metasilicate, Anhydrous	Technical	BG	100 lb
6810-00-174-1823	Sodium Nitrate	Technical	BG	100 lb
6810-00-241-1105	Sodium Perborate, Tetrahydrate	ACS	BT	1 lb
6810-00-239-0910	Sodium Stannate, Trihydrate	Technical	BT	500 g
6810-00-234-8377	Sodium Sulfate, Anhydrous	ACS	BT	500 g
6810-00-234-8380	Sodium Thiosulfate, Pentahydrate	ACS	BT	500 g
6810-00-290-6621	Stannous Fluoborate Solution		BT	10 lb
6810-00-300-6310	Starch, Soluble	ACS	BT	1 lb
6810-01-016-1807	Sulfamate Nickel Plating Solution		DR	55 gal
6810-00-146-1586	Sulfamic Acid	Technical	DR	100 lb
6810-00-227-1845	Sulfuric Acid	Technical	BT	5 pt
6810-00-551-5231	Sulfuric Acid, Electrolyte	Technical	DR	6½ gal
7510-00-530-5511	Tape, Pressure Sensitive Adhesive	HH-T-29	EA	
7510-00-530-5512	Tape, Pressure Sensitive Adhesive	HH-T-29	EA	
7510-00-530-5514	Tape, Pressure Sensitive Adhesive	HH-T-29	EA	
7510-00-584-5953	Tape, Pressure Sensitive Adhesive	HH-T-29	EA	
7510-00-664-0001	Tape, Pressure Sensitive Adhesive	HH-T-29	EA	
7510-00-841-5394	Tape, Pressure Sensitive Adhesive	HH-T-29	EA	
7510-00-833-7310	Tape, Pressure Sensitive Adhesive	HH-T-0025	EA	
7510-00-833-7311	Tape, Pressure Sensitive Adhesive	HH-T-0025	EA	
6810-00-270-9982	Tetrachloroethylene	Technical	DR	55 gal
6810-00-270-3237	Thiourea	ACS	BT	100 g
6810-00-141-6080	Trisodium Phosphate	Technical	BG	100 lb

APPENDIX D
MISCELLANEOUS INFORMATION

D.1 PURPOSE.

This appendix provides miscellaneous information on various items covered in this manual.

D.2 GENERAL.

Table D-1 Provides spot identification test for various plated deposits

Table D-2 Provides information for the identification of common acids

Table D-3 Provides amount of alkali cyanide required to dissolve metal salts

Table D-4 Lists acid and alkaline reactions with various metals

Table D-5 Lists color changes and ranges of common indicators

Table D-6 Provides information on the purification of plating solutions

Table D-7 Recommendations for selection of a coating

Table D-1. Identification and Spot Test for Various Plated Deposits

ALUMINUM: No reaction with nitric acid or silver nitrate but reacts with sodium hydroxide.
CADMIUM: 1. Place a drop of concentrated nitric acid on surface and allow it to remain at least 1 minute. 2. Blot up drop with filter paper. 3. Place a drop of sodium sulfide on spot on filter paper. 4. A deep yellow color denotes the presence of cadmium.
CHROMIUM: 1. Place a drop of concentrated hydrochloric acid on surface and allow to react at least 1 minute. 2. Blot up drop with filter paper. 3. A green color denotes chromium.
COPPER: 1. Place a drop of concentrated nitric acid on surface and allow to react at least 1 minute. 2. The development of a blue or green solution indicates copper or nickel. 3. Test for nickel.
MAGNESIUM: 1. Place a drop of silver nitrate solution on surface and allow it to react several seconds. 2. The development of a black deposit indicates magnesium.
NICKEL: 1. Place a drop of concentrated nitric acid on the surface and allow it to react at least 1 minute. 2. Blot up drop with filter paper. 3. Place a drop of dimethylgloxime on the spot on the filter paper. 4. A dark red color indicates nickel.
PLATINUM GROUP: White deposits unaffected by either nitric acid or hydrochloric acid.
TIN: 1. Place a drop of concentrated hydrochloric acid on the surface and allow to react at least 30 seconds. 2. Blot spot up with filter paper. 3. Place a small amount of cacotheline on spot. 4. A reddish-violet color confirms tin.

Table D-1. Identification and Spot Test for Various Plated Deposits - Continued

TITANIUM: 1. Place a drop of acid solution (25 cc water, 10 cc nitric acid, 10 cc phosphoric acid, 10 cc hydrofluoric acid, and 10 cc sulfuric acid) on surface and allow to react for at least 30 seconds. 2. Add 1 drop of hydrogen peroxide (27%). 3. A yellow color indicates titanium.
SILVER: 1. Place a small amount of deposit on a spot plate. 2. Add 1 or 2 drops of concentrated nitric acid and allow it to react several minutes. 3. Make alkaline with sodium hydroxide. 4. A brownish-black precipitate indicates silver.
ZINC: 1. Place a small amount of deposit in a small beaker or other suitable container. 2. Add several drops of concentrated nitric acid and allow it to react at least 30 seconds. 3. Make alkaline with ammonia. 4. Add several drops of 10% sodium sulfide solution. 5. A white precipitate indicates zinc.

Table D-2. Identification of Common Acids

1. Acetic acid has the odor of strong vinegar and forms a blood-red color with a neutral solution of ferric chloride. 2. Fluoboric acid. There is no rapid test for this acid. It is best identified by heating with concentrated sulfuric acid and alcohol and tested for boric acid by the flame test. Ignite the alcohol and note the color of the flame. A bright green tint, particularly at the edges, indicates borate. 3. Fluosilicic acid. A distinctive test for this acid is the precipitate of gelatinous silica which is obtained when it is neutralized with ammonia and heat. 4. Formic acid has an irritating odor resembling acetic acid. A few spots added to ammoniacal silver nitrate and heated gives a precipitate of metallic silver. With concentrated sulfuric acid in a test tube it gives carbon monoxide which can be ignited at the mouth of the tube and will burn with a blue flame. 5. Hydrochloric acid fumes strongly in the air (if concentrated) and more strongly in the presence of ammonia. A white precipitate of silver chloride is obtained with silver nitrate solution to which a little nitric acid has been added. 6. Hydrofluoric acid is the only acid which attacks glass or DISSOLVES sand. Fumes strongly. 7. Nitric acid fumes in air, has a characteristic odor, attacks brass and copper with the evolution of brown fumes and gives an intense blue color with a solution of diphenylamine in 90% sulfuric acid. 8. Phosphoric acid is viscous, does not char organic matter, and forms a bright yellow precipitate on heating with nitric acid, ammonium nitrate, and ammonium molybdate solution. 9. Sulfuric Acid. By the precipitation of white barium sulphate when barium chloride is added to the carefully diluted acid.

Table D-3. Alkali Cyanide Required to Dissolve Metal Slats

Metal Salt	Sodium Cyanide	Potassium Cyanide
When adding metal salts to cyanide plating solution, sufficient sodium or potassium cyanide must also be added to combine with the metal salts to take it into solution in the form of a double compound. The following indicates the amount of cyanide that must be added per pound of metal salt:		
Cadmium Oxide	1.2	1.6
Copper Carbonate	1.7	2.3
Copper Cyanide	1.1	1.5
Metallic Gold (Chloride)	1.0	1.3
Metallic Gold (Cyanide)	0.26	0.4
Silver Chloride	0.71	0.9
Silver Cyanide	0.38	0.5
Zinc Cyanide	0.85	1.1
Zinc Oxide	1.2	1.6

Table D-4. Color Change and pH Range of Common Indicators

Indicator	pH Range		Color	
	From	To	Acid	Basic
Acid Cresol Red	0.2	1.8	Orange	Amber
Thymol Blue	1.2	2.8	Red	Yellow
Tropeoline OO	1.3	3.0	Red	Yellow
Methyl Yellow	2.9	4.0	Red	Yellow
Methyl Orange	3.1	4.4	Red	Orange
Bromophenol Blue	3.0	4.6	Yellow	Blue
Bromophenol Green	3.8	5.4	Yellow	Blue
Methyl Red	4.2	6.2	Red	Yellow
Chlorophenol Red	4.8	6.4	Yellow	Red
Bromophenol Red	5.4	7.0	Yellow	Red
Bromothymol Blue	6.0	7.6	Yellow	Blue
Phenol Red	6.4	8.0	Yellow	Red
Cresol Red	7.2	8.8	Amber	Red
Meta-Cresol Purple	7.4	9.0	Yellow	Purple
Thymol Blue	8.0	9.6	Yellow	Blue
Phenophthalein	8.0	9.8	Colorless	Red
Thymolphthalein	9.3	10.5	Colorless	Blue
Alizarin Yellow	10.1	12.0	Colorless	Violet

Table D-5. Acid and Alkali Reactions with Metal

Metal	Sodium Hydroxide	Sodium Cyanide	Hydrochloric Acid		Hydrofluoric Acid		Nitric Acid		Sulfuric Acid	
			Dil	Conc	Dil	Conc	Dil	Conc	Dil	Conc
Aluminum	CH [1]	S [2]	CH [1]	CH [1]	CH [1]	CH [1]	VS [3]	I [4]	S [2]	S [2]
Cadmium	I [4]	CH [1]	CH [1]	CH [1]	CH [1]	CH [1]	CH [1]	CH [1]	CH [1]	CH [1]
Chromium	I [4]	I [4]	CH [1]	CH [1]	CH [1]	CH [1]	I [4]	I [4]	CH [1]	I [4]
Copper	I [4]	CH [1]	I [4]	HS [5]	HS [5]	HS [5]	CH [1]	CH [1]	I [4]	H [6]
Gold	HS [5]	CH [1]	I [4]	I [4]	I [4]	I [4]	I [4]	I [4]	I [4]	I [4]
Iron	I [4]	I [4]	CH [1]	CH [1]	HS [5]	HS [5]	CH [1]	I [4]	CH [1]	I [4]
Lead	HS [5]	I [4]	H [6]	H [6]	I [4]	I [4]	H [6]	H [6]	I [4]	H [6]
Nickel	I [4]	HS [5]	S [2]	H [6]	I [4]	I [4]	S [2]	CH [1]	VS [3]	HS [5]
Silver	I [4]	CH [1]	I [4]	I [4]	I [4]	I [4]	CH [1]	CH [1]	I [4]	H [6]
Tin	HS [5]	H [6]	S [2]	H [6]	CH [1]	CH [1]	VS [3]	I [4]	VS [3]	H [6]
Zinc	CH [1]	CH [1]	CH [1]	CH [1]	CH [1]	CH [1]	CH [1]	CH [1]	CH [1]	CH [1]

[1] Cold & Hot Dissolve
[2] Slowly Dissolves
[3] Very Slowly Dissolves
[4] Insoluble
[5] Hot Slowly Dissolves
[6] Hot Dissolves

Table D-6. Purification of Contaminated Plating Solution

1. Contamination with metallic impurities:
   a. Minor metallic contamination can be removed by low current density electrolysis.
      (1) Place a large sheet or corrugated wire dummy in solution and apply low current (5 ASF).
      (2) Continue electrolysis for 24 hours.
      (3) Remove dummy cathode and plate a test panel at normal current density.
      (4) If problem has not been eliminated on test panel, repeat Steps 1 through 3 or follow procedure for major metallic contamination.
   b. Major metallic contamination:
      (1) Transfer solution to an auxiliary tank.
      (2) Stir in 1.5 – 2.0 lbs of purified zinc dust per 100 gallons of solution.
      (3) Continue to stir for 1 hour.
      (4) Allow solution to settle approximately 5 hours.
      (5) Clean original tank thoroughly.
      (6) Filter solution into the original tank through a well-packed filter.
2. Contamination with organic impurities:
   a. Minor contamination can be removed by filtering the solution through a filter packed with carbon cartridges.
   b. Major organic contamination can be removed by the following procedure:
      (1) Transfer solution to an auxiliary tank.
      (2) Heat to 49° – 54°C (120° – 130°F).
      (3) Stir in 5 lbs of activated carbon per 100 gallons of solution.
      (4) Continue to stir solution approximately 5 hours.
      (5) Stir in 5 lbs of filter aid per 100 gallons of solution.
      (6) Allow solution to settle a minimum of 12 hours, overnight if possible.
      (7) Filter solution to another cleaned tank through a well-packed filter. The last several inches of solution in the treatment tank should be discarded.
      (8) Clean filter pads and filter the solution into the cleaned original plating tank.
      (9) Analyze the solution and make necessary adjustments.
      (10) Electrolytically purify as per above instructions on metallic contamination removal.

Table D-7. Selecting a Plated Coating

For	Recommended
Protection against atmospheric corrosion where appearance is not important	Cadmium or Zinc
Appearance only	Brass, Bronze, Chromium, Gold, Nickel, Silver
Appearance and corrosion protection	Brass, Bronze, Chromium Gold, or Silver. Over undercoatings of nickel or copper or both
Hardness and wear resistance	Chromium or Nickel
Solderability	Cadmium, Tin, or Alloys of Tin-Lead or Tin Zinc
Food containers	Tin
Preventing case hardening (stop-off)	Bronze, Copper, Electroless Nickel, Nickel, or Silver
Reducing corrosion at bimetal contacts	Cadmium, Tin, or Zinc
Electrical conductivity and contact resistance	Copper, Gold, Rhodium, or Silver
Electroforming	Copper or Nickel
Chemical resistance	Nickel

APPENDIX E
USE OF MAGNE-GAGE THICKNESS TESTER

E.1 PURPOSE.

This appendix provides instructions for measurement of thickness of coatings using the Aminco-Brenn Magne-Gage, Catalog Number 5-660. The Magne-Gage may be used to determine thickness of nickel coatings on steel or nonmagnetic materials (such as 300 series stainless steel), and thickness of nonmagnetic coatings on steel and other magnetic materials.

E.2 INSTALLATION OF MAGNE-GAGE.

CAUTION

Do not allow magnets used in Magne-Gage to approach any closer than 1 inch to each other or to any other magnetized material.

a. Select a firm mounting surface away from vibration and strong magnetic fields (such as AC and DC power lines, etc.) which is at least 3 inches away from any large iron or steel objects such as benches, cabinets, or surface plates.

CAUTION

Deviation from the horizontal plane should not exceed five (5) degrees. Do not subject the Magne-Gage to vibration or shock.

b. Level the instrument.

E.3 PREPARATION FOR OPERATION.

a. Remove the plastic cover. Raise vertically, after loosening the 4 knurled screws at the bottom edge of the instrument.

b. Select a magnet, the corresponding card of thickness samples, and the proper calibration curve, in accordance with instructions in Table E-1.

c. Magnets are numbered to correspond with the numbered recesses in the magnet holder, and with the designation on the calibration curve and thickness sample card provided by the manufacturer.

NOTE

Each Magne-Gage is accompanied by a set of calibrations and curves provided by the manufacturer. Due to minor variations in instruments, use only the data pertaining to the instrument in use. The data is identified by the serial number of the instrument for which it is provided.

CAUTION

The tip of the magnet should never be cleaned with anything other than a soft cloth, lens paper, or clean compressed air.

d. Carefully wipe the tip of the magnet with a soft, clean cotton or linen cloth before mounting.

E.4 CALIBRATION.

CAUTION

Do not force the loop beyond the crimped part of the upper pin. Be careful to exert as little force as possible on the balance arm, at any time, since the arm and its bearings can be damaged by rough handling.

a. Raise the carriage about an inch above the base. Insert the bottom of the magnet through the hole in the carriage base (Figure E-2), and fit the loop at the top of the magnet over both extension pins which are on the left end of the balance arm. This allows the loop to hang from the crimped part of the upper pin.

b. The lower part of the magnet should hang freely inside the magnet guard set in the carriage base.

c. Replace the cover and gently tighten the screws with finger tips.

d. Carefully clean the test thickness sample and place it on the base, centering it under the plastic magnet guard.

CAUTION

Be careful not to force the dial farther than the dial stop.

e. Lower the carriage until the magnet guard rests gently on the sample, and slowly rotate the large dial knob counterclockwise until the dial stop, internally mounted in the dial, is reached (do not confuse the dial stop with the balance arm stop). This brings the magnet into contact with the sample.

CAUTION

Do not spin the dial, as any sudden impact will damage the specimen and the magnet, and will shorten the life of the gauge.

f. Slowly rotate the dial in the reverse direction until the balance arm pointer leaves the central index with a sudden movement, indicating the magnet has raised from the sample. Record the white dial reading.

g. Continue taking dial readings until 5 readings have been taken that do not vary more than 2 divisions. Average these readings, and compare this figure with the dial setting given on the calibration curve. These figures should check within 2 divisions (except for calibration E; for this calibration, see Paragraph E.5, Step e).

NOTE

After the first reading has been obtained, it is not necessary to rotate the dial back to the dial stop before making additional readings. A counterclockwise rotation of 15 to 20 (or more) divisions normally is sufficient, before turning the dial counterclockwise to obtain the next reading.

h. If the average reading obtained does not correspond with the figure given on the calibration chart, clean the magnet and the thickness sample again, and recheck.

(1) If the error persists, return the Magne-Gage to the Precision Measurement Equipment Laboratory (PMEL) for calibration and certification.

(2) If the calibration results are within required limits, proceed with operating instructions provided in Paragraph E.5.

E.5 OPERATION OF THE MAGNE-GAGE.

a. Operating Instructions.

(1) Table E-1 lists the proper magnets for measuring various types of coatings. In addition, it lists the various calibration charts which must be used to obtain the desired measurements, and the thickness ranges which apply in each case.

(2) Use of Black and White Dials – readings for all calibrations except the F calibration are taken from the white dial. Readings for the F calibration are taken from the black dial, as explained in Paragraph E.5, Step f.

(3) White Dial – the white dial moves through 168 divisions between dial stops. The clockwise stop occurs at –9 (91 on the dial). By rotating the dial counterclockwise to the other dial stop, a reading of 159 (59 on the dial) is obtained.

(4) Black dial; Ratio between Dials – the black dial is numbered in the direction opposite to that of the white dial. The numbers on the black dial bear no relationship to the numbers on the white dial, except that the 2 dials are connected by a gear mechanism giving a 5:1 ratio of rotation. Thus, 5 revolutions of the black dial are equivalent to 1 revolution of the white dial. The large knob is connected directly to the black dial. By turning the large knob, it is thus possible to obtain a finer adjustment of the white dial, resulting in a more accurate reading.

NOTE

It is recommended that the small knob be used as little as possible. Using the small knob as little as possible minimizes the possibility of damaging the dial stops.

b. Sizes and Shapes of Parts (measuring coating thickness).

(1) Curved Surfaces – it is more difficult to make coating thickness measurements on concave, than on convex, surfaces, since the magnet has a tendency to ride up the side of the concave surface, rather than detaching quickly. The magnet guard will tend to restrain such movement; however, readings may still vary more on curved surfaces, compared to readings taken on a plane surface.

(2) Concave Surfaces – to find the point on a concave surface at which the magnet will meet the surface perpendicularly, place a small ball on the surface and observe where it comes to rest. Place this point on the specimen under the

magnet tip without changing the angle of the specimen.

(3) Small Parts – small parts or objects difficult to hold may be embedded in a piece of modeling clay before placing them under the magnet.

(4) Cavities or Depressions – when measuring coating thickness in a cavity or depression on a large surface, it may be necessary to remove the foot bar on the underside of the carriage base, using a screwdriver.

(5) Convex Surfaces – to set the magnet on a convex surface, place the magnet perpendicular to the surface, making sure that the tip, rather than the side, of the magnet is used for measuring.

c. Minimizing Errors – to hold errors in thickness measurement (caused by the size or shape of the part) to less than 10%, observe the following procedures:

(1) No correction factor is required when measuring coating thickness on cylinders with a diameter larger than one-fourth of an inch, or on spheres larger than three-fourths of an inch in diameter.

(2) Do not make thickness determinations too close to the edge of a part. For nickel coatings on nonmagnetic base metals, thickness determinations should not be made any closer to the edge than 0.15 inch, and for other applications, should be no closer to the edge than 0.08 inch.

(3) For coating thickness determinations on flat pieces less than 1/32 inch thick, the piece should be at least three quarters of a square inch in area. For flat pieces thicker than 1/32 inch, the piece should be at least 3 inches wide, unless a special calibration has been made.

NOTE

When base metal or coating is not smooth, errors in measurement of thickness may occur. Magnets must be used in normal vertical position. Check frequently with calibration samples, to avoid errors. Standard samples of coatings on various base metals are furnished with the instrument.

d. Instructions for thickness measurement with calibrations A, B, C, D, and H (also see Table E-1).

CAUTION

Always clean the magnet tip and specimen in the manner described in Paragraph E.3, Step d before placing the magnet on the balance arm. Carefully remove any iron fillings or other foreign matter that may adhere to the magnet. A clean magnet clicks sharply when contacting the metal specimen.

(1) Place the appropriate magnet on the balance arm, and rotate the white dial counterclockwise to the dial stop. Then rotate the dial clockwise, and observe whether the balance arm pointer remains at the index line (the rib on the transparent cover).

(2) If it does, replace with the next higher number magnet, and repeat the test until a magnet is selected which adheres to the specimen.

e. Instructions for thickness measurement with calibration E (also see Table E-1).

(1) Use magnet number 2. The cylindrical counterpoise located in the magnet holder is hooked through the hole located in the end of the balance arm opposite to the end holding the magnet.

NOTE

When the counterpoise is used, the Magne-Gage is extremely sensitive to vibration. Take readings very slowly and carefully, to avoid premature detachment of the magnet from the specimen.

(2) Because of the magnetic strength of the nickel coating being measured, and because use of the relatively heavy counterpoise is required, E calibrations may be less stable than other determinations. For this reason, check calibration frequently using the standard thickness samples, and make corrections as required.

f. Instructions for thickness measurement with calibration F (also see Table E-1).

(1) Use magnet number 3, and take all readings from the black dial.

(2) The Magne-Gage must be ZERO BALANCED when using calibration F, Zero balance as follows:

(a) Suspend magnet number 3 (designed with added weight) from the crimped pin of the

balance arm, in accordance with instructions provided in Paragraph E.4, Step a.

(b) Rotate the large knob counterclockwise until 0 on the black dial aligns with both the dial pointer and the small dot on the white dial (located at a point between 110 and 130).

(c) The balance arm should now be balanced, and should be suspended freely between the balance stops.

NOTE

Alignment should be accomplished with the carriage raised above the base, and without use of the standard samples.

(d) When rotating the black dial (large knob) counterclockwise to match 0 and the black dot on the white dial, the pushdown arm will remain in contact with the balance arm.

(e) To raise the pushdown arm, continue rotating the black dial counterclockwise for at least 20 divisions beyond the matching point. Then rotate the black dial clockwise back to the matching point, and the pushdown arm will raise.

NOTE

When setting the zero balance, or when taking readings, the dial must always be rotated clockwise.

(f) When required, change the black dial setting so that the balance arm is balanced at the same time that 0 and the pointer are matched near the black dot, as follows:

(3) Loosen the set screw on the hub of the large knob.

(4) Holding the white dial firmly in place, with the balance arm balanced, turn the black dial until 0 coincides with the dial pointer.

(5) Again tighten the set screw on the hub of the large knob.

E.6 CALCULATION OF THICKNESS USING A CALIBRATION CURVE.

a. After taking readings in accordance with instructions provided in Paragraphs E.5, Steps e and f, transfer readings obtained to the dial reading column located at the bottom of the appropriate calibration curve (provided with the Magne-Gage).

b. Follow the vertical line up until it intersects the calibration curve.

c. From this point on the calibration curve, follow the horizontal line to the left, to the thickness column at the left side of the calibration curve.

d. The number obtained represents coating thickness in hundred-thousandths (0.00001) of an inch.

NOTE

If the vertical line from the dial reading (at the bottom of the chart) meets the curve at a part of the curve covered by the next higher numbered magnet, whenever possible, use the next magnet and retest for thickness.

E.7 MAINTENANCE AND CARE OF MAGNE-GAGE.

a. As the Magne-Gage is a precision instrument, care must be exercised in handling. Careless handling may result in damage to the instrument or in incorrect readings.

b. Turn dials gently. Spinning the dials may result in damage to the planetary gear and dial stops.

c. Use only soft cloth, lens paper, or compressed air to clean magnets. Replace magnets in correct compartments in carrying case when not is use. Keep magnets separated from each other and from other magnetized objects, and do not allow contact with abrasive surfaces or materials.

d. Do not attempt to determine coating thickness of moving strips. Specimens tested must be stationary.

e. Keep plastic cover in place, to keep dust out of bearings.

f. Do not lubricate any part of Magne-Gage at any time.

g. If a magnet weakens, or the instrument becomes out of calibration more than 2 divisions on any calibration chart, return the instrument to the Precision Measurement Equipment Laboratory (PMEL) for correction or calibration.

NOTE

If thickness of composite copper-nickel coatings must be measured, special graphs used in conjunction with calibrations B and E are available from the American Instrument Company, Silver Spring, MD.

Table E-1. Thickness of Coatings, Magnet Numbers, and Calibrations

Magnet No.	Nonmagnetic Coatings on Steel		Nickel Coatings on Steel		Nickel Coatings on Nonmagnetic Metals	
	Calibrations	Thickness, Inches	Calibrations	Thickness, Inches	Calibrations	Thickness, Inches
1	A	0 – 0.002	B	0 – 0.00075		
2	C	0.002 – 0.007	E	0.0005 – 0.002		
3	D	0.007 – 0.025			F	0 – 0.001
4	H	0.025 – 0.080				

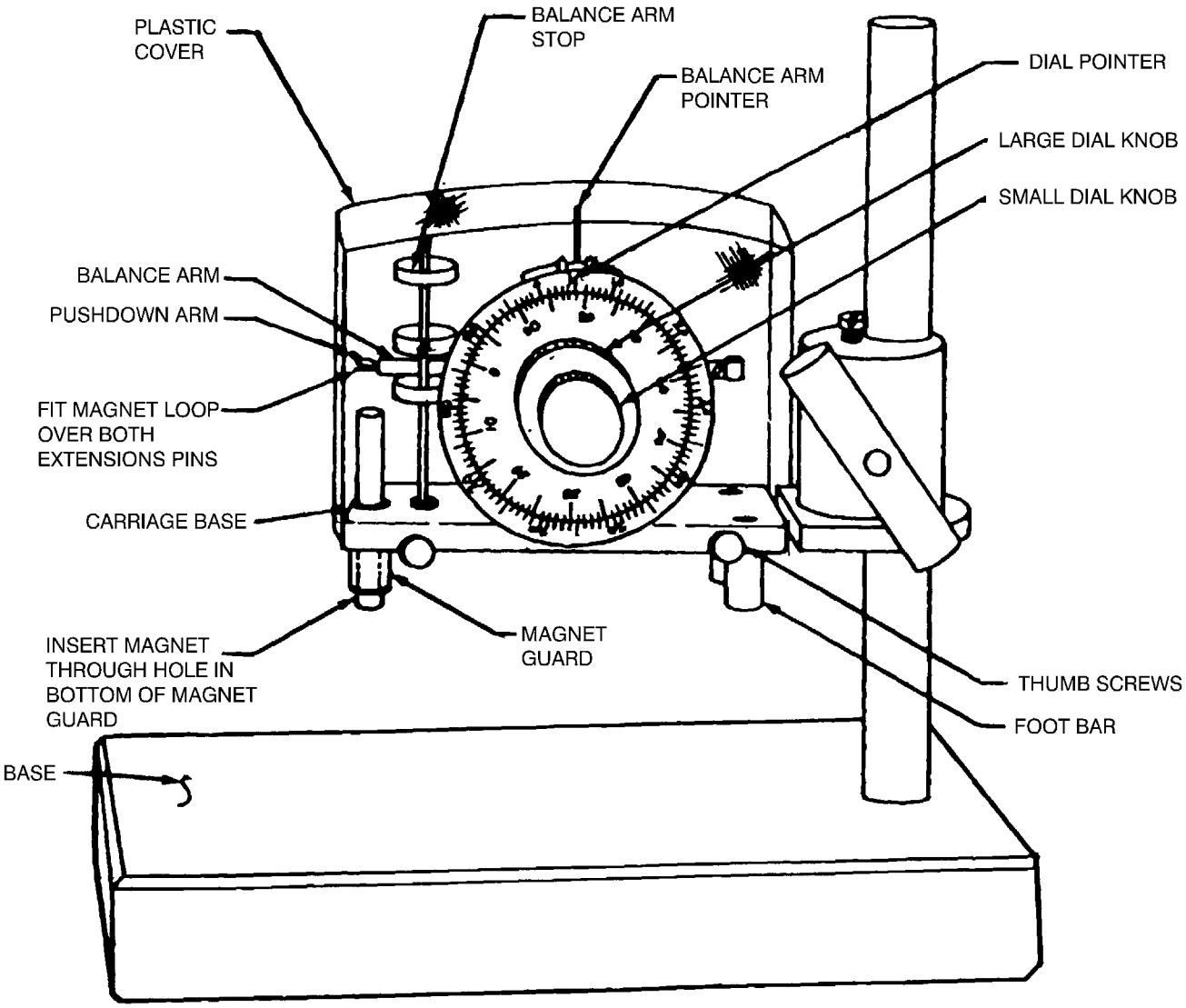

Figure E-1. Side View of the Magne-Gage

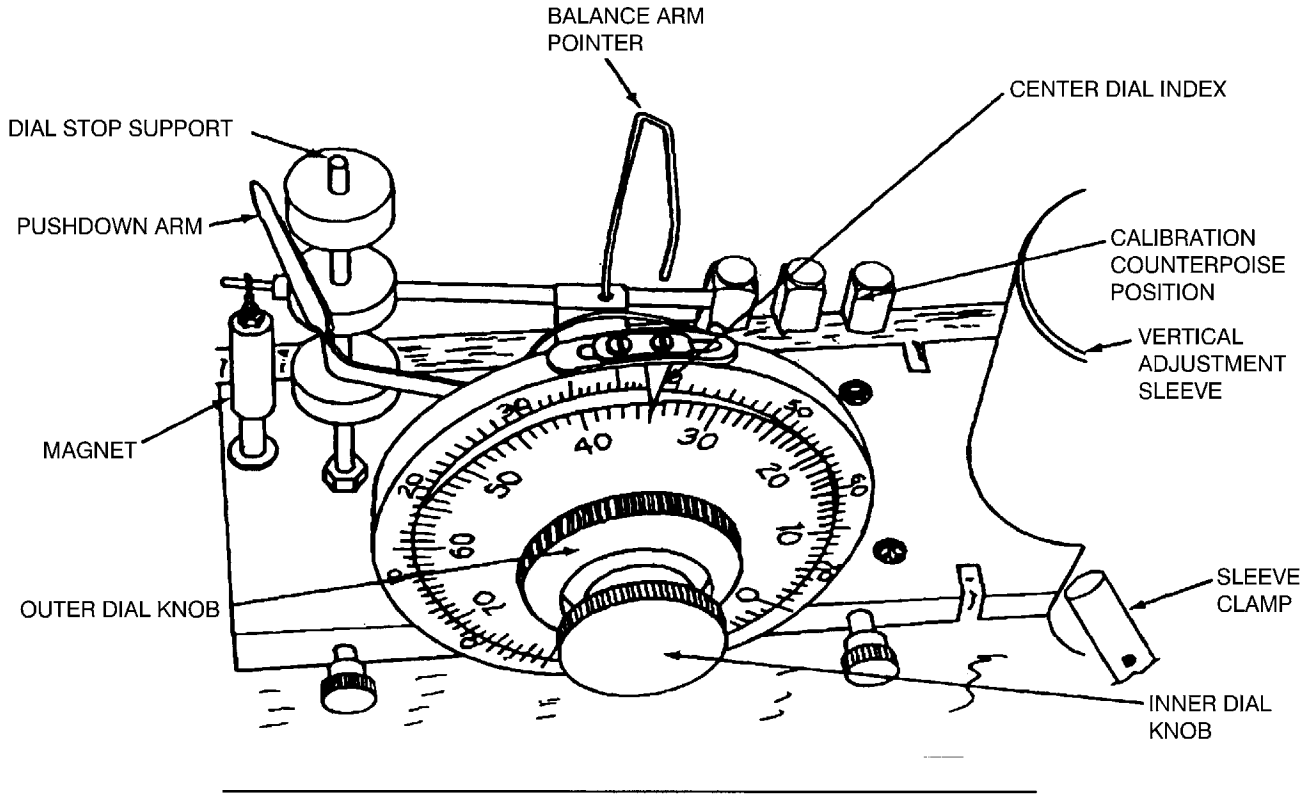

Figure E-2. Top View of Magne-Gage

GLOSSARY

A

Abrasive	A substance used in grinding, honing, lapping, polishing, pressure blasting, and barrel finishing operations. Abrasives include materials such as silicates, garnet, emery, glass, corundum, diamond, aluminum oxide, silicon carbide, and boron carbide.
Abrasive Blasting	A process of cleaning or finishing by means of an abrasive material directed at high velocity against the work piece.
Acid	A substance which yields hydrogen ions to a base in a chemical reaction; an acid tastes sour, turns blue litmus red, produces free hydrogen ions, and, when mixed with a base, forms a salt.
Acidity	The measure of hydrogen ion concentration of a solution.
Activated Carbon	A specially treated, porous form of carbon or charcoal having a large surface area capable of absorbing large quantities of gases, vapors and colloidal solids.
Activiation	Elimination of a passive condition on a surface.
Active	Capable of reacting chemically.
A/dm^2	Amperes per square decimeter.
Addition Agent	A material added to a plating solution for the purpose of modifying the character of the deposit or solution.
Adhesion	The attractive force that exists between an electrodeposit and its substrate. The ability of a deposit to cling to the basis metal due to strong atomic or molecular attraction between the two.
AFI	Air Force Instruction
AFOSH	Air Force Occupational Safety and Health
AFOSH STD	Air Force Occupational Safety and Health Standard
Agitation	Shaking or stirring a solution to insure a homogeneous mixture.
AIA	Aerospace Industry Association
Alkali	A substance capable of producing hydroxyl ions in solution. A base.
Alkaline Cleaning	Cleaning by means of an alkaline solution.
Alloy	A substance having metallic properties composed of two or more elements at least one of which must be a metal.
Alloy Plate	A deposit containing two or more metals so intimately mixed or combined as not to be distinguishable to the unaided eye.
Alloy Plating	Codeposit or two or more metals.
Amorphous	Noncrystalline or devoid of regular structure.
Ampere	The unit for measuring electrical current. It represents the passage of one coulomb per second.
AMS	Aerospace Material Specification
Anion	A negatively charged ion.
Anneal	Heating or cooling a substance slowly to prevent brittleness.
Anode	The positive electrode. The electrode at which current enters or electrons leave the solution.
Anode Bag	A fabric bag that completely encloses the plating anode to keep sludge that forms at the anodes from entering the plating solution.
Anode Corrosion	The electrochemical reaction with soluble anodes that causes the metal ions to go into solution at the positive electrode.
Anode Efficiency	The ratio of the actual metal that goes into solution at the anode to that which is theoretically possible with a given current density.
Anode Film	The portion of solution in immediate contact with the anode.
Anode Sludge	Compounds formed on the anode due to impurities in the anodes or by reaction with substances in the bath.
Anodic or Reverse Cleaning	Electrolytic cleaning in which the work is the anode.
Anodic Coating	A protective, decorative, or functional coating, formed by conversion of the surface of a metal in an electrolytic oxidation process.
Anodizing	An electrolytic oxidation process in which the surface of a metal, when anodic, is converted to an oxide film having desirable protective, decorative or functional properties.
Anti-Pitting Agent	A substance added to a plating solution for the specific purpose of preventing the formation of pits or large pores in the deposit.
ASF	Amperes per square foot.
ASTM	American Society for Testing and Materials
Atomic Weight	The weight of an atom of any element.
Avoirdupois Ounce	A unit of weight equal to 1/16 pound, 0.911 troy ounce or 28.35 grams.

B

Back EMF	The potential set up in an electrolysis cell which opposes the flow of current, caused by such factors as concentration, polarization and electrode films.

Barrel Plating	Electroplating done in a mechanically rotating barrel that operates as a self-contained unit or in a standard still plating tank. The method is especially suited for plating large numbers of small parts.
Base Metal	A metal that readily oxidizes or dissloves to form ions. The opposite of noble metal.
Basis Metal	The material upon which coating are deposited.
Bath	The solution used for cleaning or plating.
Baume' or Be	A specific gravity or solution density scale.
Bond	The action by which a deposited metal is held to a basis metal by molecular forces.
Bright Dip	A solution used to produce a bright surface on a metal.
Bright Plating	A process that which produces an electrodeposit having a high degree of specular reflectance in the as-plated condition.
Bright Plating Range	The range of current densities within which a given plating solution produces a bright plate.
Brightener	An addition agent used in plating solutions to produce a smoother, denser, more reflective plate over that which is obtained without its use. Brighteners are not authorized for Air Force due to difficulties encountered as the result of their use.
Brush Plating	A method of plating in which the plating solution is applied with a pad or brush within which is an anode and which is moved over the cathode to be plated.
Buffer	A substance which, when added to a solution, causes it to resist any change in hydrogen ion concentration upon addition of acid or alkali.
Building Up	Electroplating for the purpose of increasing the dimensions of an article.
Build-Up	Overplating or undesirable building up of deposit on corners or edges during plating. Also referred to as "treeing."
Burnt Deposit	A rough, noncoherent, or otherwise unsatisfactory deposit produced by the application of an excessive current density or solution imbalance and usually containing oxides or other inclusions.
Bus (Bus Bar)	A rigid conducting section for carrying current to the anode and cathode bars.

C

Carburizing	Heat treatment of metal to increase the carbon content of the surface layer.
Cathode	The negative electrode. The electrode through which current leaves, or electrons enter, the solution. In electroplating, the electrode which receives the deposit.
Cathode Efficiency	The ratio of actual metal deposited on the cathode to that which is theoretically deposited based on current density.
Cathode Film	The layer of solution in contact with the cathode that differs in composition from that of the bulk of the solution.
Cathodic or Direct Cleaning	Electrolytic cleaning in which the work is the cathode.
Chemical Pickling	The removel of the surface layer on a metal by chemical means.
Chromate	A salt of chromic acid.
Chrome	Chromium.
Cleaning	The removal of foreign materials from the surface of an item.
Concentration	Strength or relative intensity of dissolved materials.
Conductance	The capacity of a medium for transmitting electrical current. The reciprocal of resistance.
Conduction Salt	A salt added to a solution to increase its conductivity.
Conductivity	The ability of a solution to convey electrical current.
Contact (Galvanic) Coating	The coating of a metal without the use of an outside source of current, by immersion of the work in a solution in contact with another metal.
Conversion	A coating produced by chemical or electrochemical treatment of a metallic surface that gives a superficial layer containing a compound of the metal.
Corrosion	The gradual destruction of a material usually by solution, oxidation, or other means attributable to a chemical process; also products formed as the result of this chemical action.
Coulomb	The quantity of electricity that is transmitted through an electric circuit in one second when the current in the circuit is one ampere. The quantity of electricity that will deposit 0.0011180 grams of silver.
Covering Power	The ability of a plating solution to evenly deposit metal in low current density areas.
Critical Current Density	Any value of the current density at which a variable exhibits a sudden change in value.
Crocus	Powdered iron oxide used for cleaning or polishing.
Current Density	Amount of current per unit area; total current divided by total area of electrode in the solution.
Current Efficiency	The proportion of current used in depositing or dissolving metal; the proportion of current that is effective in carrying out a given process in accordance with Faraday's law.

Cyanide (Combined)	The amount of cyanide in chemical combination with a platable metal.
Cyanide (Free)	The difference between combined and total cyanide.
Cyanide (Total)	The combined, plus free cyanide, present in a solution.
Decimeter	A metric measure equal to 1/10 meter (3.937 inches).
Degreasing	The removal of grease and oils from a surface by immersion of the item in liquid solvent or solvent vapors.
Deionization	The removal of ions from a solution by ion exchange.
Deionized Water	Water that has been processed through synthetic resin beds to remove undesirable mineral ions.
Density	Mass per unit volume.
Detergent	A surface active agent that possesses the ability to clean soiled surfaces.
Distilled Water	Nearly pure water; water that has been produced by evaporation and subsequent condensation of water, leaving any dissolved solid impurities behind.
Drag-In	The water or solution that adheres to or that is entrapped in the objects introduced into a bath.
Drag-Out	The solution that adheres to or that is entrapped in the objects removed from a bath.
Ductility	The ability of a material to deform plastically without fracturing.
Dummy	A cathode in a plating solution which is used to work the solution but which is not to be made use of after plating. Often used for removal or decomposition of impurities.
Dummying	Plating with dummy cathodes.

E

Electrochemical Process	A process involving a change in composition of a surface, or deposition of a coating upon a surface as the result of the use of electrical current.
Electrocleaning	The removal of foreign materials from the surface of an item, submerged in a solvent or detergent solution, while passing an electric current through item. If the item is made the anode then anodic cleaning occurs. If the item is made the cathode then cathodic cleaning occurs.
Electrode	A conductor through which current enters or leaves an electrolytic cell, at which there is a change from conduction by electrons to conduction by charged particles of matter, or vice versa.
Electrodeposition	The process of depositing a substance upon an electrode by electrolysis.
Electroless Plating	Deposition of a metallic coating by a controlled chemical reduction, which is catalyzed by the metal or alloy being deposited.
Electrolyte	A conducting medium in which the flow of current is accompanied by movement of matter; a substance which when dissolved in a solvent produces a conducting medium.
Electrolysis	Production of chemical changes by the passage of current through an electrolyte.
Electromotive Series	A table that lists in order the standard electrode potentials of specified electrochemical reactions.
Electroplating	The electrodeposition of an adherent metallic coating upon an electrode for the purpose of obtaining a surface with properties or dimensions different from those of the basis metal.
Equivalent Weight	One gram atomic weight of an element divided by its valence.
Etch	To remove metal or roughen the surface of an item by chemical or electrolytic action.

F

Faraday	The number of coulombs (96,490) required for an electrochemical reaction involving one chemical equivalent.
Filter Aid	An inert, insoluble material, more or less finely divided, used as a filter medium or to assist in filtration by preventing excessive packing of the filter cake.
Flash (Flash Plate)	A very thin electrodeposit of metal.
Formula Weight	The weight, in grams, obtained by adding the atomic weights of all elemental constituents in a chemical formula.

G

Galvanic Cell	An electrolytic cell capable of producing electrical energy by electrochemical action.
Gassing	The evolution of gasses from one or more of the electrodes during electrolysis.
g/L	grams per liter

H

Hard Chromium	Chromium plated for engineering rather than decoration purposes. Not necessarily harder than the latter.
Hard Water	Water containg calcuim and/or magnesium ions in solution, which will form insoluble curds with soaps.

Heat Treatment	An operation, or combination of operations, involving the heating and cooling of a metal part for the purpose of obtaining certain desirable conditions such as hardness and ductility.
High Carbon Steel	Steel having a carbon content greater than 0.6 percent characterized by the properties of brittleness.
Hull Cell	A trapezoidal box of nonconducting material with electrodes arranged to permit observation of cathodic or anodic effects over a wide range of current densities.
Hydrogen Embrittlement	Embrittlement of a metal caused by absorption of hydrogen during a pickling, cleaning, or plating process.
Hydrogen Overvoltage	Overvoltage associated with the liberation of hydrogen gas.

I

Immersion Plate	A metal deposit produced by a displacement reaction in which one metal displaces another from solution.
Indicator (pH)	A substance which changes color when the pH of the medium is changed.
Inert Anode	An anode which is insoluble in the electrolyte under the conditions prevailing in the electrolysis.
Inhibitor	A substance used to reduce the rate of a chemical of electrochemical reaction.
Interface	The boundary between two phases.
Ion	An atom or group of atoms which has lost or gained one or more electrons thereby acquiring an electrical charge.
Ion Exchange	A reversible process by which ions are interchanged between a solid and a liquid with no substantial structural changes of the solid.

K

Karat	A twenty-fourth part by weight; 0.2 gram.

L

Leveling Action	The ability of a plating solution to produce a surface smoother than that of the basis metal.
Limiting Current	The maximum current density at which satisfactory deposits can be obtained.

M

Matte Finish	A dull finish.
Mechanical Plating	A plating operation in which the cathodes are moved mechanically during the depositon.
MIL	One-thousandth of an inch (0.001 inch).
Mill Scale	The heavy oxide layer formed during hot fabrication or heat treatment of metals.
Motor Generator	A motor driven generator which delivers direct current of appropriate amperage and voltage necessary for electroplating operations.

N

NAS	National Aerospace Standard
Nitriding	Formation of nitrides of metals by heat treatment in special atmospheres.
Noble Metal	A metal that does not readily tend to furnish ions, and, therefore, does not dissolve readily nor easily enter into such reactions as oxidation, etc. The opposite of base metal.
Nodule	A small knot or rounded projection formed on a cathode during electroplating.
Non-Ferrous	Not containing iron; any metal or alloy other than iron.
Normal (N) Solution	A solution which contains on gram equivalent weight (molecular weight divided by the hydrogen equivalent) of a specific substance (solute) per liter of solution.

O

OHM	The unit of electrical resistance.
OHM's Law	The current (I) in an electric circuit is directly proportional to the electromotive force (E) in the circuit. E = IR.
Operating Level	The height at which a solution in a processing tank should be maintained while parts are being treated in the tank.
Orange Peel	A finish resembling the dimpled appearance of an orange peel.
Overvoltage	The irreversible excess of potential required for an electrochemical reaction to proceed actively at a specific electrode over and above the reversible potential charactertics of that reaction.
Oxidation	A reaction in which electrons are removed from a reactant (an increase in the positive valence of an element); the combination of a reactant with oxygen.
Oxide	A chemical compound of a metal oxygen.
Oxidizing Agent	A compound that causes oxidation, thereby itself becoming reduced.

P

Passivity	The condition of a metal that retards its normal reaction in a specified environment and associated with the assumption of a potential more noble than its normal potential.
Peeling	The detachment of partial detachment of a plated metal coating from the basis metal.
Periodic Reverse	A method of cleaning or plating in which the direction of electrical current within the electrical system is reversed periodically.

pH	A measure of the acidity or basicity of a solution; the logarithm, to the base 10, of the reciprocal of the concentration of hydrogen ion content of an aqueous solution.
Pickle	An Acid solution used to remove oxide or other compounds from the surface of a metal by chemical or electrochemical action.
Pickling	The removal of oxides or other compounds from a metal surface by means of a pickle.
Pit	A small depression or cavity produced in a metal surface during plating or by corrosion.
Plating Range	The current density range over which a satisfactory electroplate can be deposited.
Polarization	A reverse potential set up during electroplating that tends to resist the flow of current; more precisely, the change in the potential of an electrode during electrolysis such that the potential of an anode always becomes more noble and that of a cathode less noble than their respective static potentials.
Pore	A minute cavity or channel extending all or part way through a coating.
Porosity	A condition of a deposit in which microscopic openings or pores are present.
ppm	parts per million
Precipitate	An insoluble substance which separates from a solution, produced by chemical reaction of two or more substances dissolved in the solution.
Primary Current Distribution	The distribution of the current over the surfaces of an electrode in the absense of polarization.
Process Control	The adjustment, addition, or deletion of the significant variables of any process before or during the utilization of the process to assure that each operation accomplishes its intended purpose.

Q

Quenching	Cooling of a metal by plunging it into oil, water, etc.

R

Rack	A frame for holding or suspending items and conveying current to items during electroplating and related operations.
Racking	The process and procedure of placing parts on a rack.
Reducing Agent	A compound that causes reduction, thereby itself being oxidized.
Reduction	A reaction in which electrons are added to a reactant (a reduction in the positive valence of an element); the addition of hydrogen or the abstraction of oxygen.
Resistance	Opposition to the flow of electrical current.
Reverse Current	The reverse of the usual direction of electrical current required for electroplating; the part is made the anode.
Ripple (d-c)	Regular modulations in the DC output wave of a rectifier unit or a motor generator, originating from the harmonies of the AC input system in the case of a rectifier, or from the harmonies of the induced voltage of a motor generator set.
Robber	An auxiliary cathode so placed as to divert to itself some current from portions of the work which would otherwise receive too high a current density.
Rochelle Salts	Common name for Potassium sodium tartrate $KNaC_4O_6.4H_2O$.

S

Sacrificial Protection	The form of corrosion protection wherein the coating corrodes rather than the basis metal even though the latter may be exposed to the corroding medium through pores, scratches, etc.
SAE	Society of Automotive Engineers
Salting Out	The precipitation of a substance form a solution, by the action of added salts.
Satin Finish	A surface finish that behaves as a diffuse reflector and which is lustrous but not mirror-like.
Scale	An adherent oxide coating that forms on a metal surface.
Sealing of Anodic Coating	A process which, by absorption, chemical reaction, or other mechanism, increases the resistance of an anodic coating to staining and corrosion, improves the durability of colors produced in the coating, or imparts other desirable properties.
Sequestering Agent	An agent that forms soluble complex compounds with or sequesters a simple ion, thereby suppressing the activity of that ion.
Shield	A nonconducting medium for altering the current distribution or path on an anode or cathode.
Slurry	A suspension of solids in water such as glass beads in water.
Soak Cleaning	Cleaning by immersion without the use of current.
Solution Control or Maintenance	The detection, measurement, and evaluation of and the adjustment to the constituents contained within a processing solution to insure each is maintained within specified limits.
Solute	The substance dissolved in a solution; the substance dissolved by the solvent.

Solvent	A liquid, capable of dissolving other substances; the medium that dissolves the solute; also refers to organic fluids used to dissolve grease or oil from the surface of metal.
Specific Gravity	The ratio of the weight or mass of a given volume of a substance to that of an equal volume of another substance (water for liquids and solids; air or hydrogen for gases).
Specific Heat	The ratio of the amount of heat required to raise the temperature of a unit mass of a substance one degree to the amount of heat required to raise the temperature of the same mass of water one degree.
Spotting Out	The delayed appearance of spots and blemishes on plated or finished surfaces.
Stalagmometer	An apparatus for determining surface tension. The mass of a drop of a liquid is measured by weighing a known number of drops or by counting the number of drops obtained from a given volume of the liquid.
Standard	A solution whose concentration is accurately known; a standard which solutions of unknown concentrations is compared against.
Still Plating	That form of plating in which the cathode remains stationary during electrodepositon.
Stop-Off (Maskant)	A material applied to a part of a cathode or plating rack to render the surface nonconductive; a material applied to a part of the surface of an article to prevent reaction of metal from that area during chemical or electrochemical processes.
Stopping Off	The application of a stop off to any part of an electrode or rack.
Spray Current	Current through paths other than the intended circuit, such as through heating coils, the tank or from other work pieces.
Stress	Force exerted upon a body that tends to strain or deform its shape. The intensity of such forces is usually neasured in pounds per square inch.
Stress Relieving	The process of heating an object to a prescribed temperature and maintaining that temperature long enough to eliminate or reduce residual stress and then cooling slowly to minimize the development of new stresses.
Strike	A thin film of material to be followed by subsequent coatings; a solution used to deposit a strike coating.
Strip	A process or solution used for the removal of a coating from a basis metal or an undercoat.
Substrate	The basis metal.
Surface Active Agent	A substance that affects markedly the interface or surface tension of solutions even when present in very low concentrations.
Surface Tension	That property, due to molecular forces, that exists in the surface film of all liquids and tends to prevent the liquid from spreading.
Surface Treatment	Any chemical or physical process which effects only the surface of an object.

T

Tank Voltage	The total voltage between the anode and cathode of a plating bath or electrolytic cell during electrolysis. It is equal to the sum of (a) the equilibrium reaction potential, (b) the IR drop, and (c) the electrode polarizations.
Tarnish	The dulling, staining, or discoloration of metals due to superficial corrosion. The film so formed.
Temper	The state of a metal with regard to the degree of hardness and resiliency.
Tensile Strength	The force per unit area required to break a material, usually measured in pounds per square inch. (psi).
Thief	See Robber.
Throwing Power	The ability of a plating solution to deposit metal sucessfully in low current density areas such as right angles, crevices, etc.
Titration	An analytical process for determining the quantity of a solution component by measuring the quantity of some reagent (liquid or solution) which reacts quantitatively with it.
Total Cyanide	The sum of both the combined and free cyanide content of a solution.
Transference	The movement of ions through the electrolyte associated with the passage of the electric current.
Trees	Branched or irregular projections of metal formed on a cathode during electrodeposition, especially at the edges or other high current density areas.
Tripoli	Friable or dustlike silica used as an abrasive.
Trivalent Chromium	Chromium ion formed by reduction of chromic acid through chemical action or during electrolysis.
Tumbling	See Barrel Plating.

V

Vacuum Deposition	A process of depositing a coating by the evaporation of a metal or a metal compound and the subsequent condensation of vapors from these materials on the surface of the work (substrate). This process is carried out in a vacuum.
Vapor Blasting	A process of cleaning or finishing by means of a slurry of abrasive in water directed at high velocity against the work piece.

Vapor Degreasing	Removal of grease or oil from a metal surface by allowing the vapors of a solvent to condense on the metal and drain off, taking the grease with it.
Voltage Efficiency	The ratio of the equilibrium reaction potential in a given electrochemical process to the bath voltage.
Volumetric Analysis	The method of analysis which depends upon measurement of the volume of standard solution consumed in a titration.

W

Water Break	A surface area not covered by a film of water, signifying nonuniform wetting and usually associated with surface contamination. An indication of insufficient cleaning.
Wetting Agent	A substance that reduces the surface tension of a liquid, thereby causing it to spread more readily on a solid surface.
Whisker	A microscopic crystalline metallic filament growing out from the surface of a metal, sometimes formed during electrodeposition and sometimes spontaneously during storage or service, after finishing.
Work	The item being plated or otherwise finished.